1500 Series Card Edge Connector
.100” X .100” Contact Spacing, Press Fit

Specifications

Insulator Material: Glass filled polyester, type PBT, 94 V-O, UL Rated.
Contact Material: Phosphor Bronze Alloy
Contact Plating: Gold and/or Tin over .000050” Nickel, (See Contact Plating Options).
Current Rating: 3 amp at 30°C
Contact Resistance:
Contact to Daughter Card:
10 m max.
Compliant section to P.T.H.:
2 m max.
Insulation Resistance:
5000 M min.
Dielectric Withstand Voltage:
1000 V AC
Daughter Board Insertion Force:
16 oz max. per contact pair when tested with a .071” thick gage.
Daughter Board Withdrawal Force:
1 oz min. per contact pair when tested with a .054” thick gage.
Compliant Section Insertion Force:
40 lbs max per contact
Compliant Section Withdrawal Force:
10 lbs min. per contact
Recommended Board Thickness:
.093”+
Recommended PCB Layout Page A-33
Operating Temperature:
-54°C to +125°C

Recognized under the recognized component Program of Underwriters Laboratories, Inc.
File Numbers: E146967 and E176234

Features

- Flat Plate Installation eliminates the need for secondary operation tooling which can damage the connector.
- Extra large chamfered entry
- Conforms to Bell-core spec TR-TSY-00078
- Extended card scoops available
- Replaceable contacts
- Molded in polarization available between contact, or on contact position.
- De-population of contacts per customer specification.
- Available in selective gold plate at contact point
- Many other custom options available, including, but not limited to:
  - Single or Both Ends Open
  - Shorting Contacts

For drawings, technical data or samples, contact E.C.S. at (714) 895-6351

Recommended Hole Size

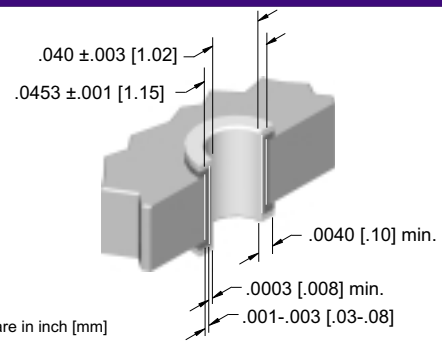

Dimensions are in inch [mm]

Drilled Hole Diameter	Plating Thickness	Hole Diameter	Pad Diameter
.0453±.001 [1.15]	Copper .001-.003 [.03-.08]	After Plating .040±.003 [1.02]	.065 [1.65]
	Tin / Lead .0003 [.008]min.		

NO. OF POS. / CONTACTS	A	B	C
05/10	0.756 [19.20]	0.600 [15.24]	0.400 [10.16]
10/20	1.256 [31.90]	1.100 [27.94]	0.900 [22.86]
12/24	1.456 [36.98]	1.300 [33.02]	1.100 [27.94]
15/30	1.756 [44.60]	1.600 [40.64]	1.400 [35.56]
18/36	2.056 [52.22]	1.900 [48.26]	1.700 [43.18]
20/40	2.256 [57.30]	2.100 [53.34]	1.900 [48.26]
22/44	2.456 [62.38]	2.300 [58.42]	2.100 [53.34]
25/50	2.756 [70.00]	2.600 [66.04]	2.400 [60.96]
28/56	3.056 [76.62]	2.900 [73.66]	2.700 [68.58]
30/60	3.256 [82.70]	3.100 [78.74]	2.900 [73.66]
31/62	3.356 [85.24]	3.200 [81.28]	3.000 [76.20]
35/70	3.756 [95.40]	3.600 [91.44]	3.400 [86.36]
36/72	3.856 [97.94]	3.700 [93.98]	3.500 [88.90]
40/80	4.256 [108.10]	4.100 [104.14]	3.900 [99.06]
43/86	4.556 [115.72]	4.400 [111.76]	4.200 [106.68]
50/100	5.256 [133.50]	5.100 [129.54]	4.900 [124.46]
55/110	5.756 [146.20]	5.600 [142.24]	5.400 [137.16]
60/120	6.256 [158.90]	6.100 [154.94]	5.900 [149.86]
65/130	6.756 [171.60]	6.600 [167.64]	6.400 [162.56]
70/140	7.256 [184.30]	7.100 [180.34]	6.900 [175.26]

For reference only, can go 1 through 70 positions.

Dimensions are in inch [mm]

.100” x .100” Contact Spacing, Press Fit

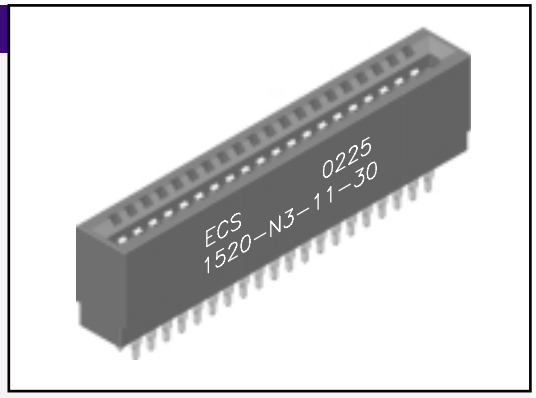

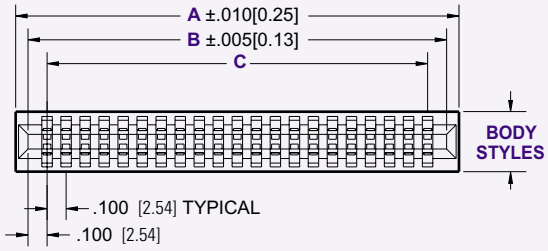

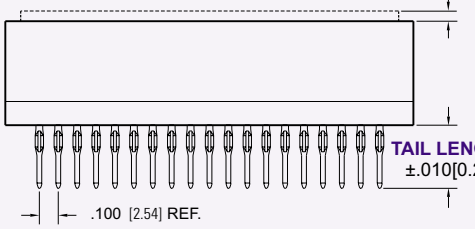

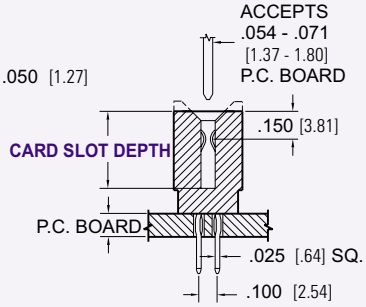

Dimensions are in inch [mm]

BODY STYLE

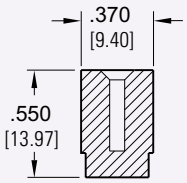

STYLE 1

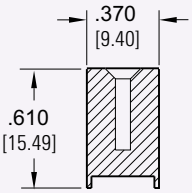

STYLE 2

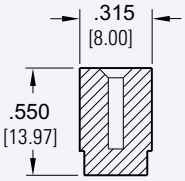

STYLE 3

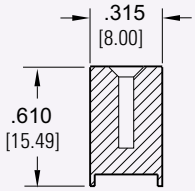

STYLE 4

PART NUMBERING

15 XX — X X — X X — XX — XXX

SERIES CODE
.100” X .100” Contact Spacing

NO. CONTACT PAIRS
01 - 70

SCOOPS
S = With
N = Without

BODY STYLE
1 = .370 X .550 [9.40 X 13.97]
2 = .370 X .610 [9.40 X 15.49]
3 = .315 X .550 [8.00 X 13.97]
4 = .315 X .610 [8.00 X 15.49]

CARD SLOT DEPTH
1 = .415 [10.54]
2 = .350 [8.89]
3 = .300 [7.62]

TAIL LENGTH

BODY STYLE 1,3	BODY STYLE 2,4
1= .190 [4.83]	1= .190 [4.83]
2= .375 [9.53]	2= .315 [8.00]
3= .465 [11.81]	3= .405 [10.29]
4= .625 [15.88]	4= .565 [14.35]
5= .710 [18.03]	5= .650 [16.51]

PLATING
50µ” Nickel Underplate

CONTACT	TAIL
10 = 10µ” Au	100µ” Sn
20 = 15µ” Au	100µ” Sn
30 = 30µ” Au	100µ” Sn
40 = 10µ” Au	5µ” Au
50 = 15µ” Au	5µ” Au
60 = 30µ” Au	5µ” Au

CUSTOM VARIATION
CONSULT FACTORY

CONSULT FACTORY FOR CONNECTORS BUILT TO YOUR SPECIFICATION

1000 Series Card Edge Connector
.100” X .200” Contact Spacing, Press Fit

Specifications

Insulator Material: Glass filled polyester, type PBT, 94 V-O, UL Rated.
Contact Material: Phosphor Bronze Alloy
Contact Plating: Gold and/or Tin over .000050” Nickel, (See Contact Plating Options).
Current Rating: 3 amp at 30°C
Contact Resistance:
Contact to Daughter Card:
10 m max.
Compliant section to P.T.H.:
2 m max.
Insulation Resistance:
5000 M min.
Dielectric Withstand Voltage:
1000 V AC
Daughter Board Insertion Force:
16 oz max. per contact pair when tested with a .071” thick gage.
Daughter Board Withdrawal Force:
1 oz min. per contact pair when tested with a .054” thick gage.
Compliant Section Insertion Force:
40 lbs max per contact
Compliant Section Withdrawal Force:
10 lbs min. per contact
Recommended Board Thickness:
.093”+
Recommended PCB Layout Page A-33
Operating Temperature:
-54°C to +125°C

Recognized under the recognized component Program of Underwriters Laboratories, Inc.
File Numbers: E146967 and E176234

Features

- Flat Plate Installation eliminates the need for secondary operation tooling which can damage the connector.
- Extra large chamfered entry
- Conforms to Bell-core spec TR-TSY-00078
- Extended card scoops available
- Replaceable contacts
- Molded in polarization available between contact, or on contact position.
- De-population of contacts per customer specification.
- Available in selective gold plate at contact point
- Many other custom options available, including, but not limited to:
  - Single or Both Ends Open
  - Shorting Contacts

For drawings, technical data or samples, contact E.C.S. at (714) 895-6351

Recommended Hole Size

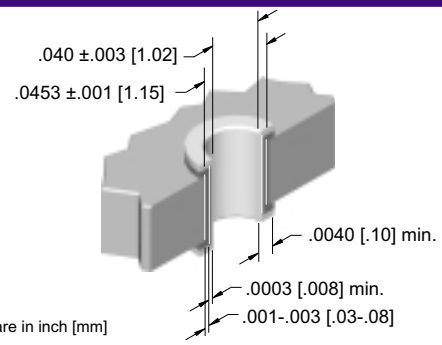

Dimensions are in inch [mm]

Drilled Hole Diameter	Plating Thickness	Hole Diameter	Pad Diameter
.0453±.001 [1.15]	Copper .001-.003 [.03-.08]	After Plating .040±.003 [1.02]	.065 [1.65]
	Tin / Lead .0003 [.008]min.		

NO. OF POS. / CONTACTS	A	B	C
05/10	0.756 [19.20]	0.600 [15.24]	0.400 [10.16]
10/20	1.256 [31.90]	1.100 [27.94]	0.900 [22.86]
12/24	1.456 [36.98]	1.300 [33.02]	1.100 [27.94]
15/30	1.756 [44.60]	1.600 [40.64]	1.400 [35.56]
18/36	2.056 [52.22]	1.900 [48.26]	1.700 [43.18]
20/40	2.256 [57.30]	2.100 [53.34]	1.900 [48.26]
22/44	2.456 [62.38]	2.300 [58.42]	2.100 [53.34]
25/50	2.756 [70.00]	2.600 [66.04]	2.400 [60.96]
28/56	3.056 [76.62]	2.900 [73.66]	2.700 [68.58]
30/60	3.256 [82.70]	3.100 [78.74]	2.900 [73.66]
31/62	3.356 [85.24]	3.200 [81.28]	3.000 [76.20]
35/70	3.756 [95.40]	3.600 [91.44]	3.400 [86.36]
36/72	3.856 [97.94]	3.700 [93.98]	3.500 [88.90]
40/80	4.256 [108.10]	4.100 [104.14]	3.900 [99.06]
43/86	4.556 [115.72]	4.400 [111.76]	4.200 [106.68]
50/100	5.256 [133.50]	5.100 [129.54]	4.900 [124.46]
55/110	5.756 [146.20]	5.600 [142.24]	5.400 [137.16]
60/120	6.256 [158.90]	6.100 [154.94]	5.900 [149.86]
65/130	6.756 [171.60]	6.600 [167.64]	6.400 [162.56]
70/140	7.256 [184.30]	7.100 [180.34]	6.900 [175.26]

For reference only, can go 1 through 70 positions.

Dimensions are in inch [mm]

.100” x .200” Contact Spacing, Press Fit

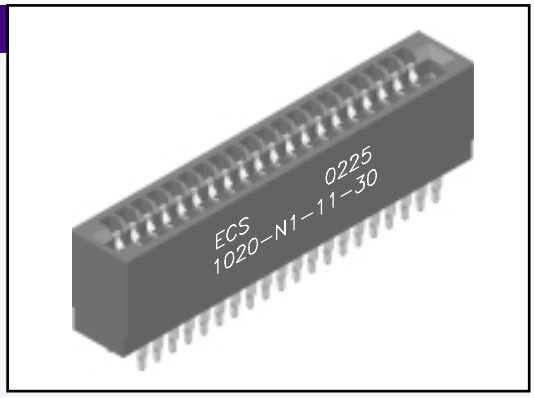

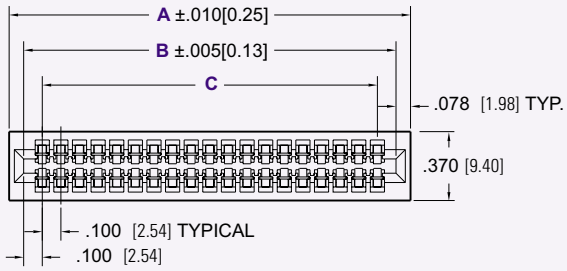

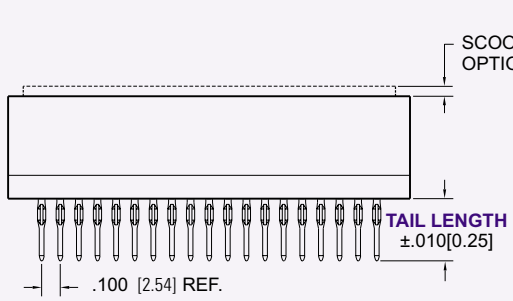

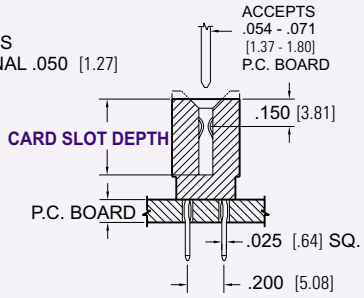

BODY STYLE

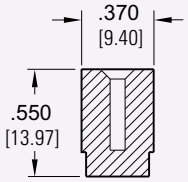

STYLE 1

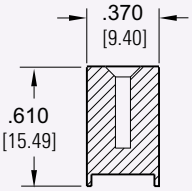

STYLE 2

Dimensions are in inch [mm]

PART NUMBERING

10 | XX — X | X — X | X — XX — XXX

SERIES CODE
.100” X .200” Contact Spacing

NO. CONTACT PAIRS
01 - 70

SCOOPS
S = With
N = Without

BODY STYLE
1 = .370 X .550 [9.40 X 13.97]
2 = .370 X .610 [9.40 X 15.49]

TAIL LENGTH

BODY STYLE 1	BODY STYLE 2
1= .190 [4.83]	1= .190 [4.83]
2= .375 [9.53]	2= .315 [8.00]
3= .465 [11.81]	3= .405 [10.29]
4= .625 [15.88]	4= .565 [14.35]
5= .710 [18.03]	5= .650 [16.51]

CARD SLOT DEPTH
1 = .415 [10.54]
2 = .350 [8.89]
3 = .300 [7.62]

PLATING
50µ” Nickel Underplate

CONTACT	TAIL
10 = 10µ” Au	100µ” Sn
20 = 15µ” Au	100µ” Sn
30 = 30µ” Au	100µ” Sn
40 = 10µ” Au	5µ” Au
50 = 15µ” Au	5µ” Au
60 = 30µ” Au	5µ” Au

CUSTOM VARIATION
CONSULT FACTORY

CONSULT FACTORY FOR CONNECTORS BUILT TO YOUR SPECIFICATION

1000 Series Card Edge Connector, AT Style
.100” X .200” Contact Spacing, Press Fit

Specifications

Insulator Material: Glass filled polyester, type PBT, 94 V-O, UL Rated.
Contact Material: Phosphor Bronze Alloy
Contact Plating: Gold and/or Tin over .000050” Nickel, (See Contact Plating Options).
Current Rating: 3 amp at 30°C
Contact Resistance:
Contact to Daughter Card:
10 m max.
Compliant section to P.T.H.:
2 m max.
Insulation Resistance:
5000 M min.
Dielectric Withstand Voltage:
1000 V AC
Daughter Board Insertion Force:
16 oz max. per contact pair when tested with a .071” thick gage.
Daughter Board Withdrawal Force:
1 oz min. per contact pair when tested with a .054” thick gage.
Compliant Section Insertion Force:
40 lbs max per contact
Compliant Section Withdrawal Force:
10 lbs min. per contact
Recommended Board Thickness:
.093”+
Recommended PCB Layout Page A-33
Operating Temperature:
-54°C to +125°C

Recognized under the recognized component Program of Underwriters Laboratories, Inc.
File Numbers: E146967 and E176234

Features

- Flat Plate Installation eliminates the need for secondary operation tooling which can damage the connector.
- Extra large chamfered entry
- Conforms to Bell-core spec TR-TSY-00078
- Extended card scoops available
- Replaceable contacts
- Molded in polarization available between contact, or on contact position.
- De-population of contacts per customer specification.
- Available in selective gold plate at contact point
- Many other custom options available, including, but not limited to:
  - Single or Both Ends Open
  - Shorting Contacts

For drawings, technical data or samples, contact E.C.S. at (714) 895-6351

Recommended Hole Size

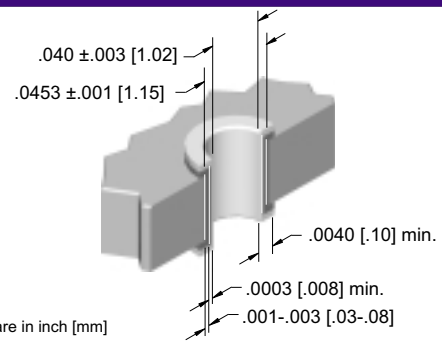

Dimensions are in inch [mm]

Drilled Hole Diameter	Plating Thickness	Hole Diameter	Pad Diameter
.0453±.001 [1.15]	Copper .001-.003 [.03-.08] Tin / Lead .0003 [.008]min.	After Plating .040±.003 [1.02]	.065 [1.65]

.100” x .200” Contact Spacing, AT Style, Press Fit

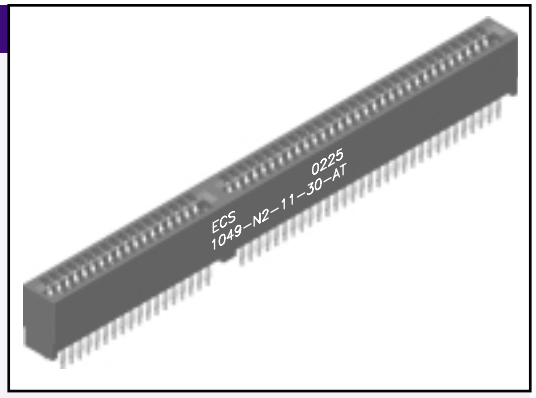

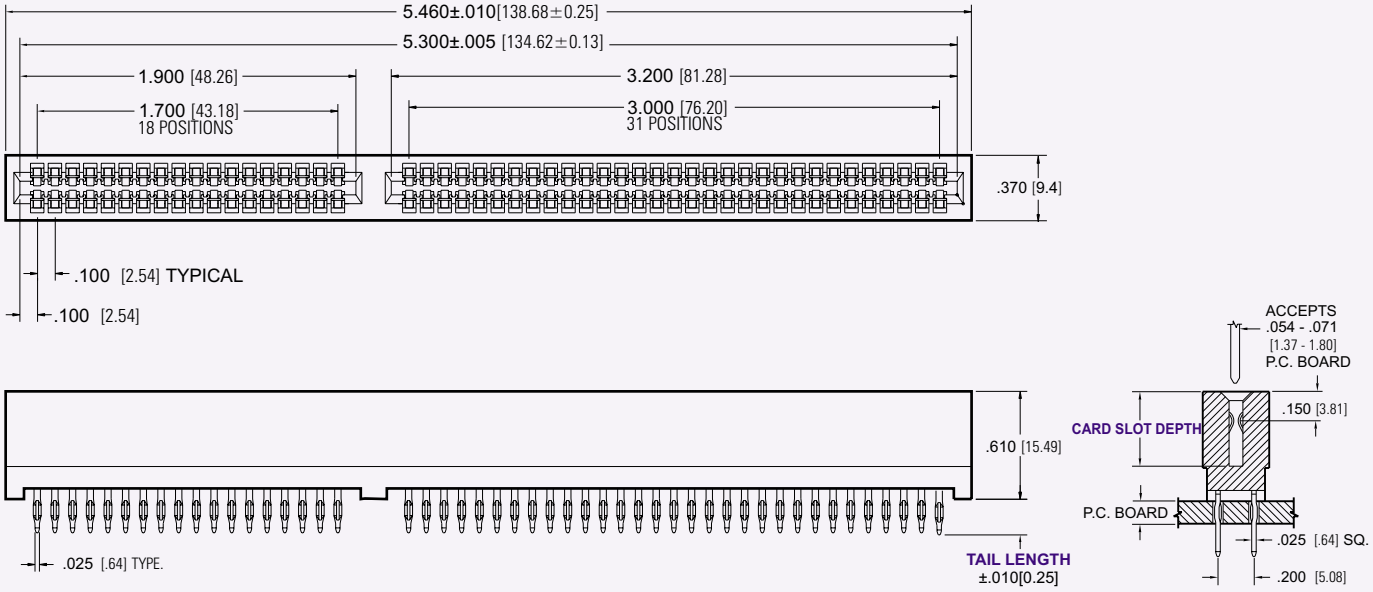

Dimensions are in inch [mm]

PART NUMBERING

10 | 49 — N | 2 — X | X — XX — AT

SERIES CODE
.100” x .200” Centers, AT Style

NO. CONTACT PAIRS

CARD SLOT DEPTH
1 = .415 [10.54]
2 = .350 [8.89]
3 = .300 [7.62]

TAIL LENGTH
1 = .190 [4.83]
2 = .375 [9.53]
3 = .465 [11.81]
4 = .625 [15.88]
5 = .710 [18.03]

PLATING
50µ” Nickel Underplate

CONTACT	TAIL
10 = 10µ” Gold	100µ” Tin Lead
20 = 15µ” Gold	100µ” Tin Lead
30 = 30µ” Gold	100µ” Tin Lead
40 = 10µ” Gold	5µ” Gold
50 = 15µ” Gold	5µ” Gold
60 = 30µ” Gold	5µ” Gold

CONSULT FACTORY FOR CONNECTORS BUILT TO YOUR SPECIFICATION

1000 Series Card Edge Connector
.100” X .200” Contact Spacing, Switching Contact

Specifications

Insulator Material: Glass filled polyester, type PBT, 94 V-O, UL Rated.
Contact Material: Phosphor Bronze Alloy
Contact Plating: Gold and/or Tin over .000050” Nickel, (See Contact Plating Options).
Current Rating: 3 amp at 30°C
Contact Resistance:
Contact to Daughter Card:
10 m max.
Compliant section to P.T.H.:
2 m max.
Insulation Resistance:
5000 M min.
Dielectric Withstand Voltage:
1000 V AC
Daughter Board Insertion Force:
16 oz max. per contact pair when tested with a .071” thick gage.
Daughter Board Withdrawal Force:
1 oz min. per contact pair when tested with a .054” thick gage.
Compliant Section Insertion Force:
40 lbs max per contact
Compliant Section Withdrawal Force:
10 lbs min. per contact
Recommended Board Thickness:
.093”+
Recommended PCB Layout Page A-33
Operating Temperature:
-54°C to +125°C

Recognized under the recognized component Program of Underwriters Laboratories, Inc.
File Numbers: E146967 and E176234

Features

- Flat Plate Installation eliminates the need for secondary operation tooling which can damage the connector.
- Extra large chamfered entry
- Conforms to Bell-core spec TR-TSY-00078
- Extended card scoops available
- Replaceable contacts
- Molded in polarization available between contact, or on contact position.
- De-population of contacts per customer specification.
- Available in selective gold plate at contact point
- Many other custom options available, including, but not limited to:
  - Single or Both Ends Open
  - Selectively Loaded with Standard Signal Contacts

For drawings, technical data or samples, contact E.C.S. at (714) 895-6351

Recommended Hole Size

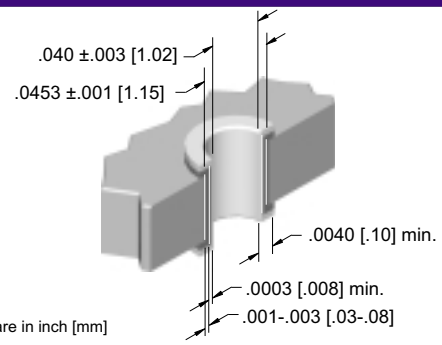

Dimensions are in inch [mm]

Drilled Hole Diameter	Plating Thickness	Hole Diameter	Pad Diameter
.0453±.001 [1.15]	Copper .001-.003 [.03-.08] Tin / Lead .0003 [.008]min.	After Plating .040±.003 [1.02]	.065 [1.65]

NO. OF POS. / CONTACTS	A	B	C
05/10	0.756 [19.20]	0.600 [15.24]	0.400 [10.16]
10/20	1.256 [31.90]	1.100 [27.94]	0.900 [22.86]
12/24	1.456 [36.98]	1.300 [33.02]	1.100 [27.94]
15/30	1.756 [44.60]	1.600 [40.64]	1.400 [35.56]
18/36	2.056 [52.22]	1.900 [48.26]	1.700 [43.18]
20/40	2.256 [57.30]	2.100 [53.34]	1.900 [48.26]
22/44	2.456 [62.38]	2.300 [58.42]	2.100 [53.34]
25/50	2.756 [70.00]	2.600 [66.04]	2.400 [60.96]
28/56	3.056 [76.62]	2.900 [73.66]	2.700 [68.58]
30/60	3.256 [82.70]	3.100 [78.74]	2.900 [73.66]
31/62	3.356 [85.24]	3.200 [81.28]	3.000 [76.20]
35/70	3.756 [95.40]	3.600 [91.44]	3.400 [86.36]
36/72	3.856 [97.94]	3.700 [93.98]	3.500 [88.90]
40/80	4.256 [108.10]	4.100 [104.14]	3.900 [99.06]
43/86	4.556 [115.72]	4.400 [111.76]	4.200 [106.68]
50/100	5.256 [133.50]	5.100 [129.54]	4.900 [124.46]
55/110	5.756 [146.20]	5.600 [142.24]	5.400 [137.16]
60/120	6.256 [158.90]	6.100 [154.94]	5.900 [149.86]
65/130	6.756 [171.60]	6.600 [167.64]	6.400 [162.56]
70/140	7.256 [184.30]	7.100 [180.34]	6.900 [175.26]

For reference only, can go 1 through 70 positions. Dimensions are in inch [mm]

.100” x .200” Contact Spacing, Press Fit

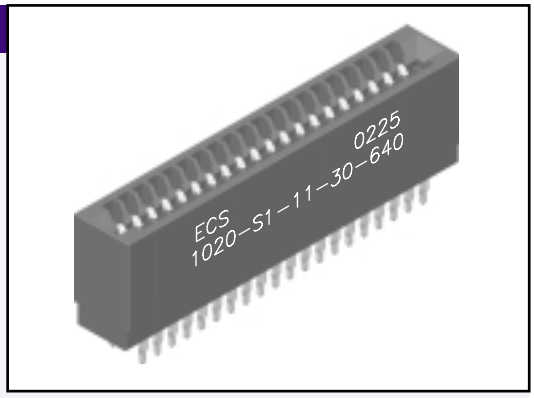

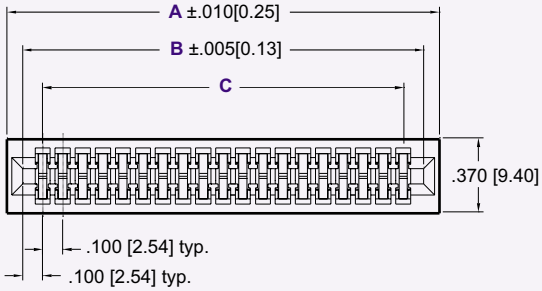

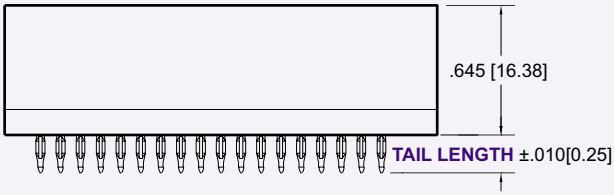

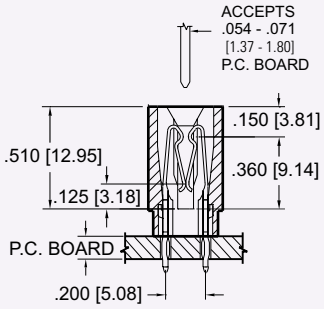

Dimensions are in inch [mm]

PART NUMBERING

10 | XX — S | 1 — 1 | X — XX — 640

SERIES CODE
.100” x .200” Contact Spacing

NO. CONTACT PAIRS
01 - 70

TAIL LENGTH

1 = .190 [4.83]
2 = .375 [9.53]
3 = .465 [11.81]
4 = .625 [15.88]
5 = .710 [18.03]

PLATING
50µ” Nickel Underplate

CONTACT	TAIL
10 = 10µ” Au	100µ” Sn
20 = 15µ” Au	100µ” Sn
30 = 30µ” Au	100µ” Sn
40 = 10µ” Au	5µ” Au
50 = 15µ” Au	5µ” Au
60 = 30µ” Au	5µ” Au

CONSULT FACTORY FOR CONNECTORS BUILT TO YOUR SPECIFICATION

1400 Series Card Edge Connector

.100” X .200” Contact Spacing, For .093” Daughter Cards

Specifications

Insulator Material: Glass filled polyester, type PBT, 94 V-O, UL Rated.
Contact Material: Phosphor Bronze Alloy
Contact Plating: Gold and/or Tin over .000050” Nickel, (See Contact Plating Options).
Current Rating: 3 amps at 30°C
Contact Resistance:
Contact to Daughter Card:
10 m Ω max.
Compliant section to P.T.H.:
2 m Ω max.
Insulation Resistance:
5000 M Ω min.
Dielectric Withstand Voltage:
1000 V AC
Daughter Board Insertion Force:
16 oz max. per contact pair when tested with a .100” thick gage.
Daughter Board Withdrawal Force:
1 oz min. per contact pair when tested with a .085” thick gage.
Compliant Section Insertion Force:
40 lbs max per contact
Compliant Section Withdrawal Force:
10 lbs min. per contact
Recommended Board Thickness:
.093”+
Recommended PCB Layout Page A-33
Operating Temperature:
-54°C to +125°C

Recognized under the recognized component Program of Underwriters Laboratories, Inc.
File Numbers: E146967 and E176234

Features

- **Designed for use with .093”±.007” Daughtercard.**
- Flat Plate Installation eliminates the need for secondary operation tooling which can damage the connector.
- Extra large chamfered entry
- Conforms to Bell-core spec TR-TSY-00078
- Extended card scoops available
- Replaceable contacts
- Molded in polarization available between contact, or on contact position.
- De-population of contacts per customer specification.
- Available in selective gold plate at contact point
- Many other custom options available, including, but not limited to:
  - Single or Both Ends Open

For drawings, technical data or samples, contact E.C.S. at (714) 895-6351

Recommended Hole Size

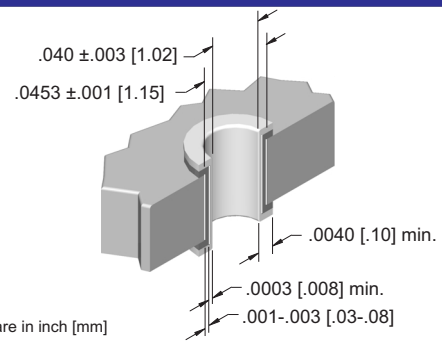

Dimensions are in inch [mm]

Drilled Hole Diameter	Plating Thickness	Hole Diameter	Pad Diameter
.0453±.001 [1.15]	Copper .001-.003 [.03-.08]	After Plating .040±.003 [1.02]	.065 [1.65]
	Tin / Lead .0003 [.008]min.		

NO. OF POS. / CONTACTS	A	B	C
05/10	0.756 [19.20]	0.600 [15.24]	0.400 [10.16]
10/20	1.256 [31.90]	1.100 [27.94]	0.900 [22.86]
12/24	1.456 [36.98]	1.300 [33.02]	1.100 [27.94]
15/30	1.756 [44.60]	1.600 [40.64]	1.400 [35.56]
18/36	2.056 [52.22]	1.900 [48.26]	1.700 [43.18]
20/40	2.256 [57.30]	2.100 [53.34]	1.900 [48.26]
22/44	2.456 [62.38]	2.300 [58.42]	2.100 [53.34]
25/50	2.756 [70.00]	2.600 [66.04]	2.400 [60.96]
28/56	3.056 [76.62]	2.900 [73.66]	2.700 [68.58]
30/60	3.256 [82.70]	3.100 [78.74]	2.900 [73.66]
31/62	3.356 [85.24]	3.200 [81.28]	3.000 [76.20]
35/70	3.756 [95.40]	3.600 [91.44]	3.400 [86.36]
36/72	3.856 [97.94]	3.700 [93.98]	3.500 [88.90]
40/80	4.256 [108.10]	4.100 [104.14]	3.900 [99.06]
43/86	4.556 [115.72]	4.400 [111.76]	4.200 [106.68]
50/100	5.256 [133.50]	5.100 [129.54]	4.900 [124.46]
55/110	5.756 [146.20]	5.600 [142.24]	5.400 [137.16]
60/120	6.256 [158.90]	6.100 [154.94]	5.900 [149.86]
65/130	6.756 [171.60]	6.600 [167.64]	6.400 [162.56]
70/140	7.256 [184.30]	7.100 [180.34]	6.900 [175.26]

For reference only, can go 1 through 70 positions. Dimensions are in inch [mm]

.100” X .200” Contact Spacing, For .093” Daughter Cards

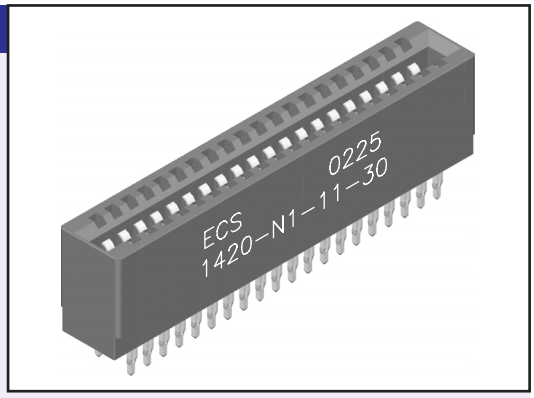

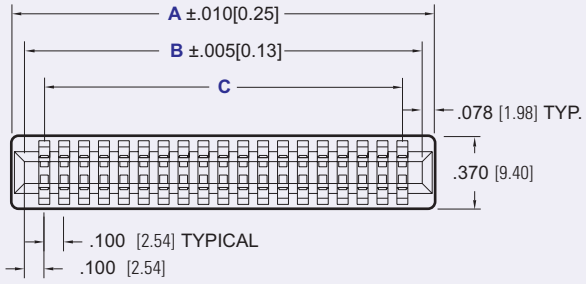

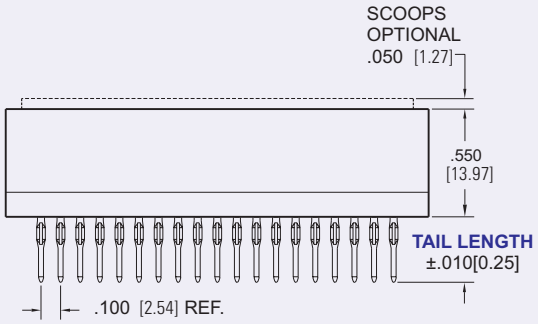

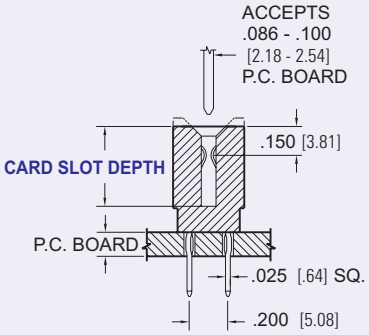

Dimensions are in inch [mm]

PART NUMBERING

14 | XX — X | 1 — X | X — XX — XXX

SERIES CODE
.100” x .200” Contact Spacing
For .093±.007 Daughtercard.

NO. CONTACT PAIRS
01 - 60

SCOOPS
S = With
N = Without

CARD SLOT DEPTH
1 = .415 [10.54]
2 = .350 [8.89]
3 = .300 [7.62]

TAIL LENGTH
1 = .190 [4.83]
2 = .375 [9.53]
3 = .465 [11.81]
4 = .625 [15.88]
5 = .710 [18.03]

CUSTOM VARIATION
CONSULT FACTORY

PLATING
50µ” Nickel Underplate

CONTACT	TAIL
10 = 10µ” Gold	100µ” Tin Lead
20 = 15µ” Gold	100µ” Tin Lead
30 = 30µ” Gold	100µ” Tin Lead
40 = 10µ” Gold	5µ” Gold
50 = 15µ” Gold	5µ” Gold
60 = 30µ” Gold	5µ” Gold

CONSULT FACTORY FOR CONNECTORS BUILT TO YOUR SPECIFICATION

2000 Series Card Edge Connector
.125” X .250” Contact Spacing, Press Fit

Specifications

Insulator Material: Glass filled polyester, type PBT, 94 V-O, UL Rated.
Contact Material: Phosphor Bronze Alloy
Contact Plating: Gold and/or Tin over .000050” Nickel, (See Contact Plating Options).
Current Rating: 3 amp at 30°C
Contact Resistance:
Contact to Daughter Card:
10 m max.
Compliant section to P.T.H.:
2 m max.
Insulation Resistance:
5000 M min.
Dielectric Withstand Voltage:
1500 V AC
Daughter Board Insertion Force:
16 oz max. per contact pair when tested with a .071” thick gage.
Daughter Board Withdrawal Force:
1 oz min. per contact pair when tested with a .054” thick gage.
Compliant Section Insertion Force:
40 lbs max per contact
Compliant Section Withdrawal Force:
10 lbs min. per contact
Recommended Board Thickness:
.093”+
Recommended PCB Layout Page A-33
Operating Temperature:
-54°C to +125°C

Recognized under the recognized component Program of Underwriters Laboratories, Inc.
File Numbers: E146967 and E176234

Features

- Flat Plate Installation eliminates the need for secondary operation tooling which can damage the connector.
- Extra large chamfered entry
- Conforms to Bell-core spec TR-TSY-00078
- Extended card scoops available
- Replaceable contacts
- Molded in polarization available between contact, or on contact position.
- De-population of contacts per customer specification.
- Available in selective gold plate at contact point
- Many other custom options available, including, but not limited to:
  - Single or Both Ends Open
  - Shorting Contacts

For drawings, technical data or samples, contact E.C.S. at (714) 895-6351

Recommended Hole Size

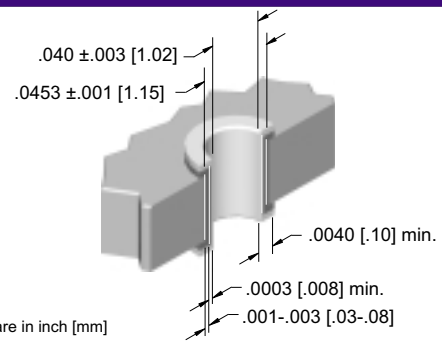

Dimensions are in inch [mm]

Drilled Hole Diameter	Plating Thickness	Hole Diameter	Pad Diameter
.0453±.001 [1.15]	Copper .001-.003 [.03-.08]	After Plating .040±.003 [1.02]	.065 [1.65]
	Tin / Lead .0003 [.008]min.		

NO. OF POS. / CONTACTS	A	B	C
06/12	1.011 [25.68]	0.875 [22.23]	0.625 [15.88]
10/20	1.511 [38.38]	1.375 [34.93]	1.125 [28.58]
12/24	1.761 [44.73]	1.625 [41.28]	1.375 [34.93]
16/32	2.261 [57.43]	2.125 [53.98]	1.875 [47.63]
18/36	2.511 [63.78]	2.375 [60.33]	2.125 [53.98]
20/40	2.761 [70.13]	2.625 [66.68]	2.375 [60.33]
22/44	3.011 [76.48]	2.875 [73.03]	2.625 [66.68]
25/50	3.386 [86.00]	3.250 [82.55]	3.000 [76.20]
28/56	3.761 [95.53]	3.625 [92.08]	3.375 [85.73]
30/60	4.011 [101.88]	3.875 [98.43]	3.625 [92.08]
36/72	4.761 [120.93]	4.625 [117.48]	4.375 [111.13]
38/76	5.011 [127.28]	4.875 [123.83]	4.625 [117.48]
40/80	5.261 [133.63]	5.125 [130.18]	4.875 [123.83]
43/86	5.626 [143.15]	5.500 [139.70]	5.250 [133.35]
50/100	6.511 [165.38]	6.375 [161.93]	6.125 [155.58]
51/102	6.636 [168.55]	6.500 [165.10]	6.250 [158.75]
56/112	7.261 [184.43]	7.125 [180.98]	6.875 [174.63]
60/120	7.761 [197.13]	7.625 [193.68]	7.375 [187.33]

For reference only, can go 1 through 60 positions.

Dimensions are in inch [mm]

.125” x .250” Contact Spacing, Press Fit

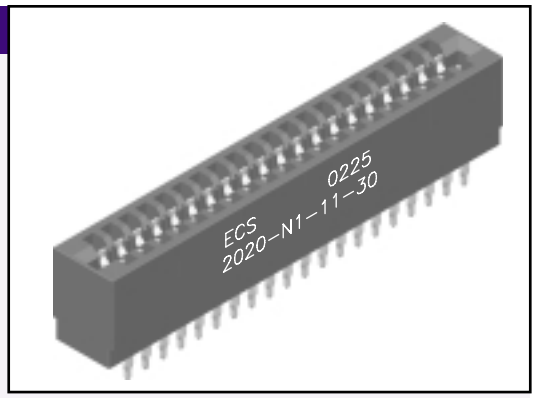

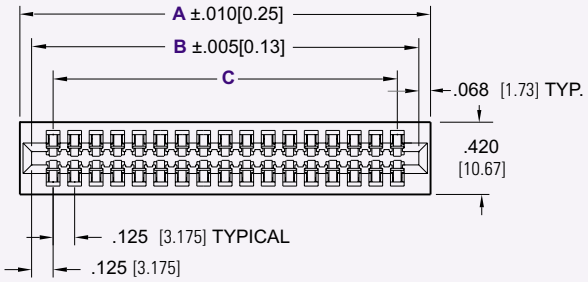

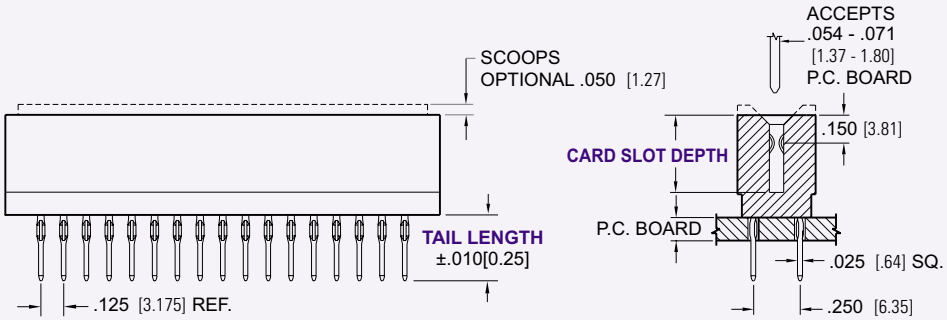

Dimensions are in inch [mm]

BODY STYLE

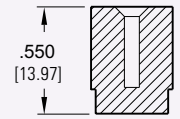

STYLE 1

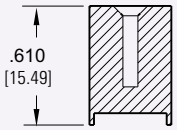

STYLE 2

PART NUMBERING

20 | XX — X | X — X | X — XX — XXX

SERIES CODE
.125” x .250” Contact Spacing

NO. CONTACT PAIRS
01 - 60

SCOOPS
S = With
N = Without

BODY STYLE
1 = .550 [13.97]
2 = .610 [15.49]

CARD SLOT DEPTH
1 = .415 [10.54]
2 = .350 [8.89]
3 = .300 [7.62]

TAIL LENGTH

BODY STYLE 1	BODY STYLE 2
1= .190 [4.83]	1= .190 [4.83]
2= .375 [9.53]	2= .315 [8.00]
3= .465 [11.81]	3= .405 [10.29]
4= .625 [15.88]	4= .565 [14.35]
5= .710 [18.03]	5= .650 [16.51]

PLATING
50µ” Nickel Underplate

CONTACT	TAIL
10 = 10µ” Au	100µ” Sn
20 = 15µ” Au	100µ” Sn
30 = 30µ” Au	100µ” Sn
40 = 10µ” Au	5µ” Au
50 = 15µ” Au	5µ” Au
60 = 30µ” Au	5µ” Au

CUSTOM VARIATION
CONSULT FACTORY

CONSULT FACTORY FOR CONNECTORS BUILT TO YOUR SPECIFICATION

2000 Series Card Edge Connector
.125” X .250” Contact Spacing, Switching Contacts

Specifications

Insulator Material: Glass filled polyester, type PBT, 94 V-O, UL Rated.
Contact Material: Phosphor Bronze Alloy
Contact Plating: Gold and/or Tin over .000050” Nickel, (See Contact Plating Options).
Current Rating: 3 amp at 30°C
Contact Resistance:
Contact to Daughter Card:
10 m max.
Compliant section to P.T.H.:
2 m max.
Insulation Resistance:
5000 M min.
Dielectric Withstand Voltage:
1500 V AC
Daughter Board Insertion Force:
16 oz max. per contact pair when tested with a .071” thick gage.
Daughter Board Withdrawal Force:
1 oz min. per contact pair when tested with a .054” thick gage.
Compliant Section Insertion Force:
40 lbs max per contact
Compliant Section Withdrawal Force:
10 lbs min. per contact
Recommended Board Thickness:
.093”+
Recommended PCB Layout Page A-33
Operating Temperature:
-54°C to +125°C

Recognized under the recognized component Program of Underwriters Laboratories, Inc.
File Numbers: E146967 and E176234

Features

- Flat Plate Installation eliminates the need for secondary operation tooling which can damage the connector.
- Extra large chamfered entry
- Conforms to Bell-core spec TR-TSY-00078
- Extended card scoops available
- Replaceable contacts
- Molded in polarization available between contact, or on contact position.
- De-population of contacts per customer specification.
- Available in selective gold plate at contact point
- Many other custom options available, including, but not limited to:
  - Single or Both Ends Open
  - Selectively Loaded with Standard Signal Contacts

For drawings, technical data or samples, contact E.C.S. at (714) 895-6351

Recommended Hole Size

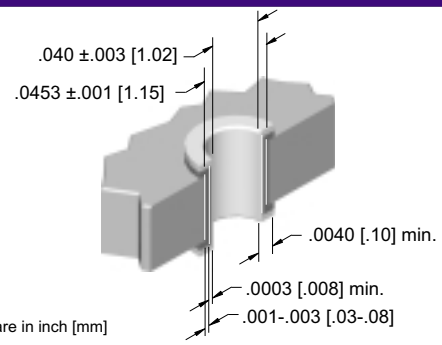

Dimensions are in inch [mm]

Drilled Hole Diameter	Plating Thickness	Hole Diameter	Pad Diameter
.0453±.001 [1.15]	Copper .001-.003 [.03-.08] Tin / Lead .0003 [.008]min.	After Plating .040±.003 [1.02]	.065 [1.65]

NO. OF POS. / CONTACTS	A	B	C
06/12	1.011 [25.68]	0.875 [22.23]	0.625 [15.88]
10/20	1.511 [38.38]	1.375 [34.93]	1.125 [28.58]
12/24	1.761 [44.73]	1.625 [41.28]	1.375 [34.93]
16/32	2.261 [57.43]	2.125 [53.98]	1.875 [47.63]
18/36	2.511 [63.78]	2.375 [60.33]	2.125 [53.98]
20/40	2.761 [70.13]	2.625 [66.68]	2.375 [60.33]
22/44	3.011 [76.48]	2.875 [73.03]	2.625 [66.68]
25/50	3.386 [86.00]	3.250 [82.55]	3.000 [76.20]
28/56	3.761 [95.53]	3.625 [92.08]	3.375 [85.73]
30/60	4.011 [101.88]	3.875 [98.43]	3.625 [92.08]
36/72	4.761 [120.93]	4.625 [117.48]	4.375 [111.13]
38/76	5.011 [127.28]	4.875 [123.83]	4.625 [117.48]
40/80	5.261 [133.63]	5.125 [130.18]	4.875 [123.83]
43/86	5.626 [143.15]	5.500 [139.70]	5.250 [133.35]
50/100	6.511 [165.38]	6.375 [161.93]	6.125 [155.58]
51/102	6.636 [168.55]	6.500 [165.10]	6.250 [158.75]
56/112	7.261 [184.43]	7.125 [180.98]	6.875 [174.63]
60/120	7.761 [197.13]	7.625 [193.68]	7.375 [187.33]

For reference only, can go 1 through 60 positions.

Dimensions are in inch [mm]

.125” x .250” Contact Spacing, Switching Contcts

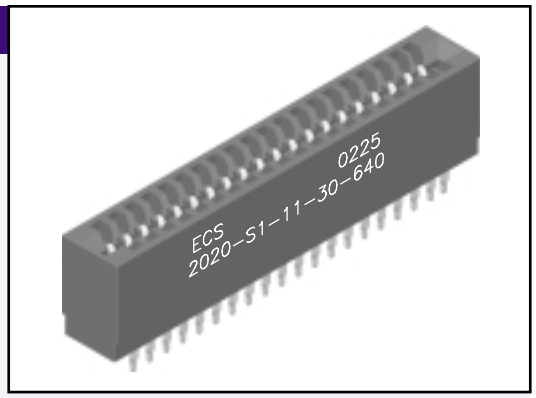

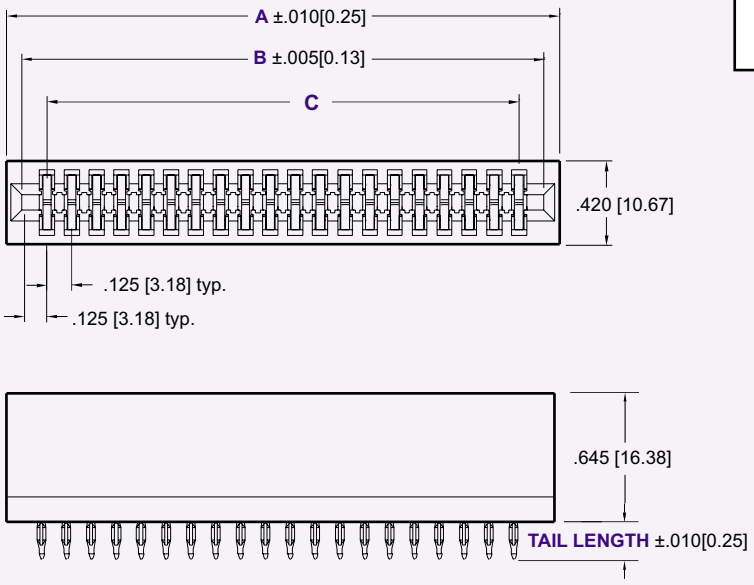

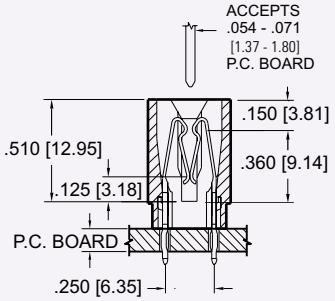

Dimensions are in inch [mm]

PART NUMBERING

20 XX — S 1 — 1 X — XX — 640

SERIES CODE
.125” x .250” Contact Spacing

NO. CONTACT PAIRS
01 - 60

TAIL LENGTH

1= .190 [4.83]
2= .375 [9.53]
3= .465 [11.81]
4= .625 [15.88]
5= .710 [18.03]

PLATING
50µ” Nickel Underplate

CONTACT	TAIL
10 = 10µ” Au	100µ” Sn
20 = 15µ” Au	100µ” Sn
30 = 30µ” Au	100µ” Sn
40 = 10µ” Au	5µ” Au
50 = 15µ” Au	5µ” Au
60 = 30µ” Au	5µ” Au

CONSULT FACTORY FOR CONNECTORS BUILT TO YOUR SPECIFICATION

2400 Series Card Edge Connector, DEC Style
.125” X .125” Contact Spacing, Press Fit

Specifications

Insulator Material: Glass filled polyester, type PBT, 94 V-O, UL Rated.
Contact Material: Phosphor Bronze Alloy
Contact Plating: Gold and/or Tin over .000050” Nickel, (See Contact Plating Options).
Current Rating: 3 amps at 30°C
Contact Resistance:
Contact to Daughter Card:
10 m max.
Compliant section to P.T.H.:
2 m max.
Insulation Resistance:
5000 M min.
Dielectric Withstand Voltage:
1500 V AC
Daughter Board Insertion Force:
16 oz max. per contact pair when tested with a .071” thick gage.
Daughter Board Withdrawal Force:
1 oz min. per contact pair when tested with a .054” thick gage.
Compliant Section Insertion Force:
40 lbs max per contact
Compliant Section Withdrawal Force:
10 lbs min. per contact
Recommended Board Thickness:
.093”+
Recommended PCB Layout Page A-33
Operating Temperature:
-54°C to +125°C

Recognized under the recognized component Program of Underwriters Laboratories, Inc.
File Numbers: E146967 and E176234

Features

- Flat Plate Installation eliminates the need for secondary operation tooling which can damage the connector.
- Extra large chamfered entry
- Conforms to Bell-core spec TR-TSY-00078
- Extended card scoops available
- Replaceable contacts
- Molded in polarization available between contact, or on contact position.
- De-population of contacts per customer specification.
- Available in selective gold plate at contact point
- Many other custom options available, including, but not limited to:
  - Single or Both Ends Open
  - Shorting Contacts

For drawings, technical data or samples, contact E.C.S. at (714) 895-6351

Recommended Hole Size

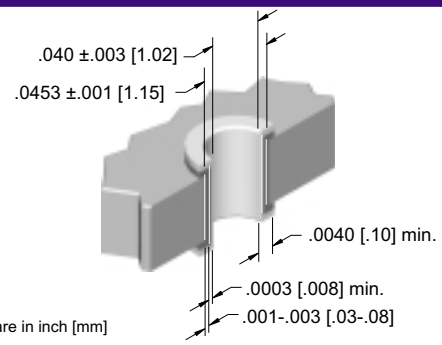

Dimensions are in inch [mm]

Drilled Hole Diameter	Plating Thickness	Hole Diameter	Pad Diameter
.0453±.001 [1.15]	Copper .001-.003 [.03-.08] Tin / Lead .0003 [.008]min.	After Plating .040±.003 [1.02]	.065 [1.65]

PART NUMBERING

24 XX — 1 X — XX — XXX

SERIES CODE
.125” X.125” DEC Connector

NO. CONTACT PAIRS
18
36

TAIL LENGTH
1 = .190 [4.83]
2 = .375 [9.53]
3 = .465 [11.81]
4 = .625 [15.88]
5 = .710 [18.03]

PLATING
50µ” Nickel Underplate

CONTACT	TAIL
10 = 10µ” Au	100µ” Sn
20 = 15µ” Au	100µ” Sn
30 = 30µ” Au	100µ” Sn
40 = 10µ” Au	5µ” Au
50 = 15µ” Au	5µ” Au
60 = 30µ” Au	5µ” Au

CUSTOM VARIATION
Consult Factory

.125” x .125” Contact Spacing, DEC Style

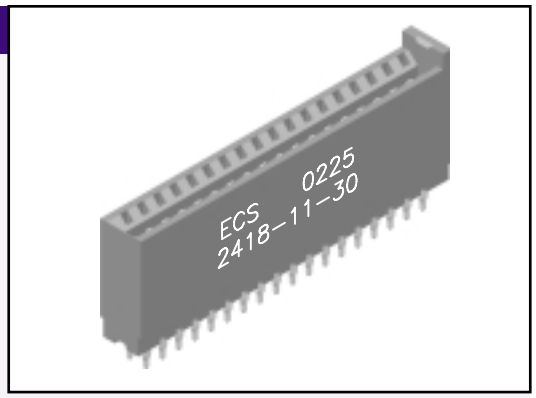

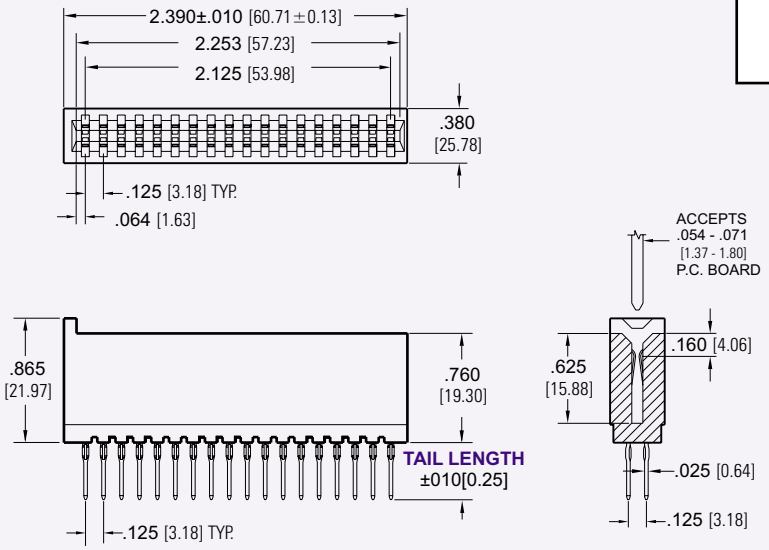

Dimensions are in inch [mm]

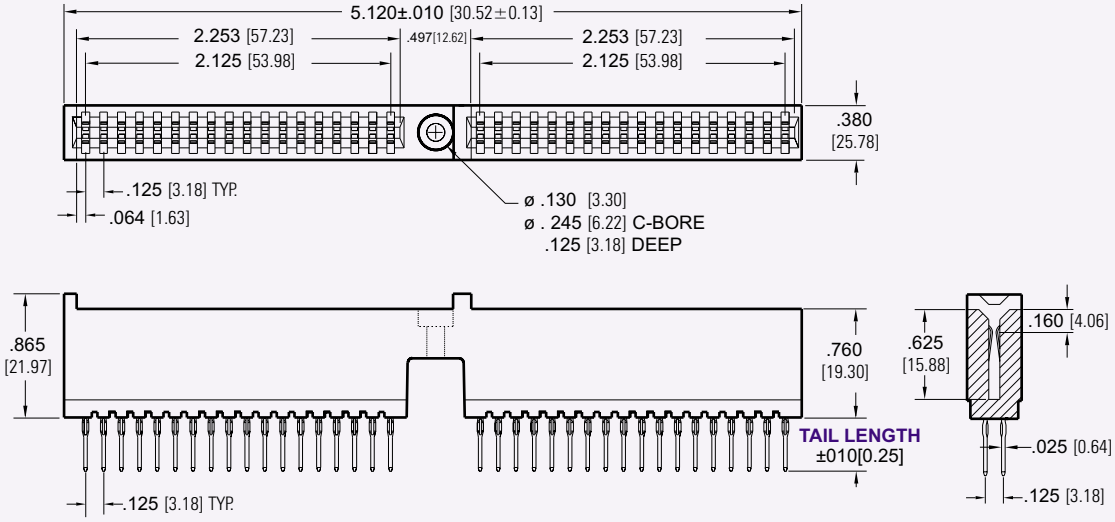

Dimensions are in inch [mm]

CONSULT FACTORY FOR CONNECTORS BUILT TO YOUR SPECIFICATION

2500 Series Card Edge Connector, High Profile
SLC 96, .125” X .125” Contact Spacing, Press Fit

Specifications

Insulator Material: Glass filled polyester, type PBT, 94 V-O, UL Rated.
Contact Material: Phosphor Bronze Alloy
Contact Plating: Gold and/or Tin over .000050” Nickel, (See Contact Plating Options).
Current Rating: 3 amps at 30°C
Contact Resistance:
Contact to Daughter Card:
10 m max.
Compliant section to P.T.H.:
2 m max.
Insulation Resistance:
5000 M min.
Dielectric Withstand Voltage:
1500 V AC
Daughter Board Insertion Force:
16 oz max. per contact pair when tested with a .071” thick gage.
Daughter Board Withdrawal Force:
1 oz min. per contact pair when tested with a .054” thick gage.
Compliant Section Insertion Force:
40 lbs max per contact
Compliant Section Withdrawal Force:
10 lbs min. per contact
Recommended Board Thickness:
.093”+
Recommended PCB Layout Page A-33
Operating Temperature:
-54°C to +125°C

Recognized under the recognized component Program of Underwriters Laboratories, Inc.
File Numbers: E146967 and E176234

Features

- Flat Plate Installation eliminates the need for secondary operation tooling which can damage the connector.
- Extra large chamfered entry
- Conforms to Bell-core spec TR-TSY-00078
- Extended card scoops available
- Replaceable contacts
- Molded in polarization available between contact, or on contact position.
- De-population of contacts per customer specification.
- Available in selective gold plate at contact point
- Many other custom options available, including, but not limited to:
  - Single or Both Ends Open
  - Shorting Contacts

For drawings, technical data or samples, contact E.C.S. at (714) 895-6351

Recommended Hole Size

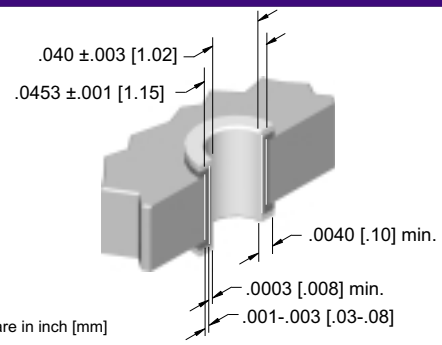

Dimensions are in inch [mm]

Drilled Hole Diameter	Plating Thickness	Hole Diameter	Pad Diameter
.0453±.001 [1.15]	Copper .001-.003 [.03-.08] Tin / Lead .0003 [.008]min.	After Plating .040±.003 [1.02]	.065 [1.65]

NO. OF POS./CONTACTS	A	B	C
25/50	3.400 [86.34]	3.230 [82.04]	3.000 [76.20]
27/54	3.650 [92.71]	3.480 [88.39]	3.250 [82.55]
30/60	4.025 [102.24]	3.855 [97.92]	3.625 [92.08]
50/100	6.525 [165.74]	6.355 [161.42]	6.125 [155.58]

For reference only, can go 1 through 50 positions.

Dimensions are in inch [mm]

.125” x .125” Contact Spacing, High Profile

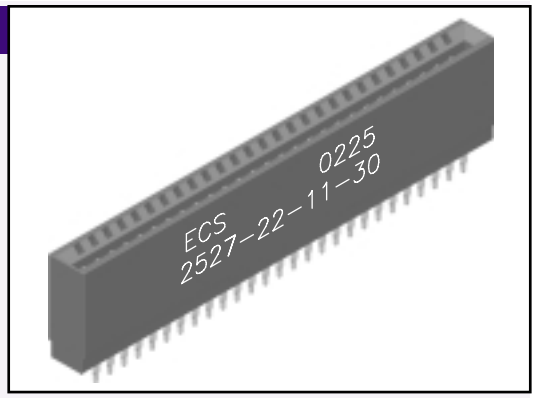

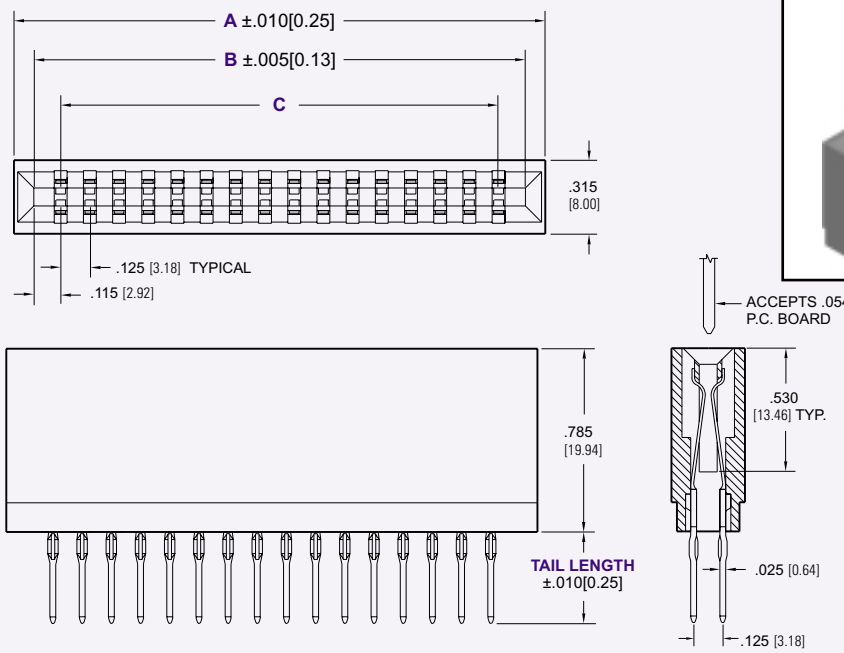

Dimensions are in inch [mm]

CONTACT STYLE

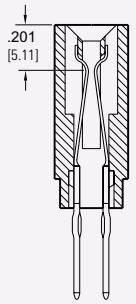

1 = EARLY MAKE CONTACTS

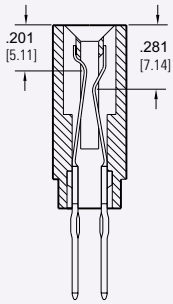

2 = EARLY / LATE MAKE CONTACTS

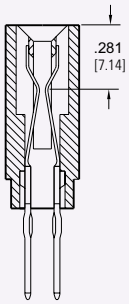

3 = LATE MAKE CONTACTS

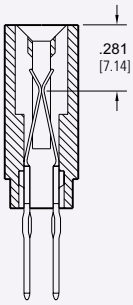

SHORTING CONTACTS

PART NUMBERING

25 XX — X X — 1 X — XX — XXX

SERIES CODE
.125” X .125” Centers, SLC High Profile

NO. CONTACT PAIRS
01 - 50

CONTACT STYLE
1 = Early Make Contacts
2 = Early/Late Make Contacts
3 = Late Make Contacts

SHORTING CONTACTS
1 = Without
2 = With

TAIL LENGTH
1 = .180 [4.57]
2 = .634 [16.10]

CUSTOM VARIATION
CONSULT FACTORY

PLATING
50µ” Nickel Underplate

CONTACT	TAIL
10 = 10µ” Au	100µ” Sn
20 = 15µ” Au	100µ” Sn
30 = 30µ” Au	100µ” Sn
40 = 10µ” Au	5µ” Au
50 = 15µ” Au	5µ” Au
60 = 30µ” Au	5µ” Au

CONSULT FACTORY FOR CONNECTORS BUILT TO YOUR SPECIFICATION

4000 Series Card Edge Connector
.150” X .200” Contact Spacing, Press Fit

Specifications

Insulator Material: Glass filled polyester, type PBT, 94 V-O, UL Rated.
Contact Material: Phosphor Bronze Alloy
Contact Plating: Gold and/or Tin over .000050” Nickel, (See Contact Plating Options).
Current Rating: 5 amp at 30°C
Contact Resistance:
Contact to Daughter Card:
10 m Ω max.
Compliant section to P.T.H.:
2 m Ω max.
Insulation Resistance:
5000 M Ω min.
Dielectric Withstand Voltage:
1800 V AC
Daughter Board Insertion Force:
16 oz max. per contact pair when tested with a .071” thick gage.
Daughter Board Withdrawal Force:
1 oz min. per contact pair when tested with a .054” thick gage.
Compliant Section Insertion Force:
40 lbs max per contact
Compliant Section Withdrawal Force:
10 lbs min. per contact
Recommended Board Thickness:
.093”+
Recommended PCB Layout Page A-33
Operating Temperature:
-54°C to +125°C

Recognized under the recognized component Program of Underwriters Laboratories, Inc.
File Numbers: E146967 and E176234

Features

- Flat Plate Installation eliminates the need for secondary operation tooling which can damage the connector.
- Extra large chamfered entry
- Conforms to Bell-core spec TR-TSY-00078
- Extended card scoops available
- Replaceable contacts
- Molded in polarization available between contact, or on contact position.
- De-population of contacts per customer specification.
- Available in selective gold plate at contact point
- Many other custom options available, including, but not limited to:
  - Single or Both Ends Open
  - Shorting Contacts

For drawings, technical data or samples, contact E.C.S. at (714) 895-6351

Recommended Hole Size

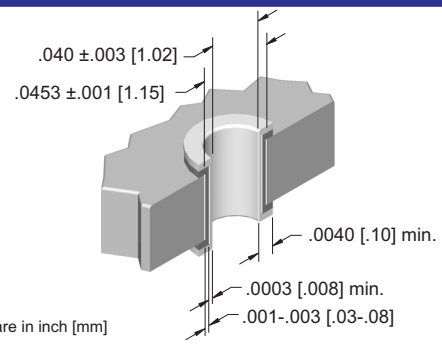

Dimensions are in inch [mm]

Drilled Hole Diameter	Plating Thickness	Hole Diameter	Pad Diameter
.0453±.001 [1.15]	Copper .001-.003 [.03-.08]	After Plating .040±.003 [1.02]	.065 [1.65]
	Tin / Lead .0003 [.008]min.		

NO. OF POS./ CONTACTS	A	B	C
06/12	1.186 [30.12]	1.050 [26.67]	0.750 [19.05]
10/20	1.786 [45.36]	1.650 [41.91]	1.350 [46.29]
12/24	2.086 [52.98]	1.950 [49.53]	1.650 [41.91]
15/30	2.536 [64.41]	2.300 [58.42]	2.100 [53.34]
18/36	2.986 [75.84]	2.850 [72.39]	2.550 [64.77]
20/40	3.286 [83.41]	3.150 [80.01]	2.850 [72.39]
22/44	3.586 [91.08]	3.450 [86.63]	3.150 [80.01]
25/50	4.036 [102.51]	3.900 [99.06]	3.600 [91.44]
28/56	4.486 [113.94]	4.350 [110.49]	4.050 [102.87]
30/60	4.786 [121.56]	4.650 [118.11]	4.350 [110.49]
31/62	4.936 [125.37]	4.800 [121.92]	4.500 [114.30]
35/70	5.536 [140.61]	5.400 [137.16]	5.100 [129.54]
36/72	5.686 [144.42]	5.550 [140.97]	5.250 [133.35]
40/80	6.286 [159.66]	6.150 [156.21]	5.850 [148.59]
43/86	6.736 [171.09]	6.600 [167.64]	6.300 [160.02]

For reference only, can go 1 through 43 positions.

Dimensions are in inch [mm]

.156” x .200” Contact Spacing, Press Fit

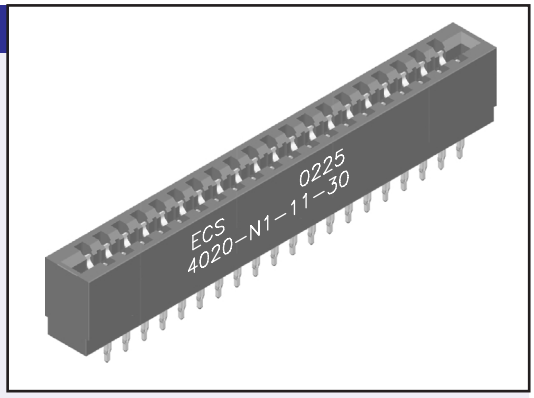

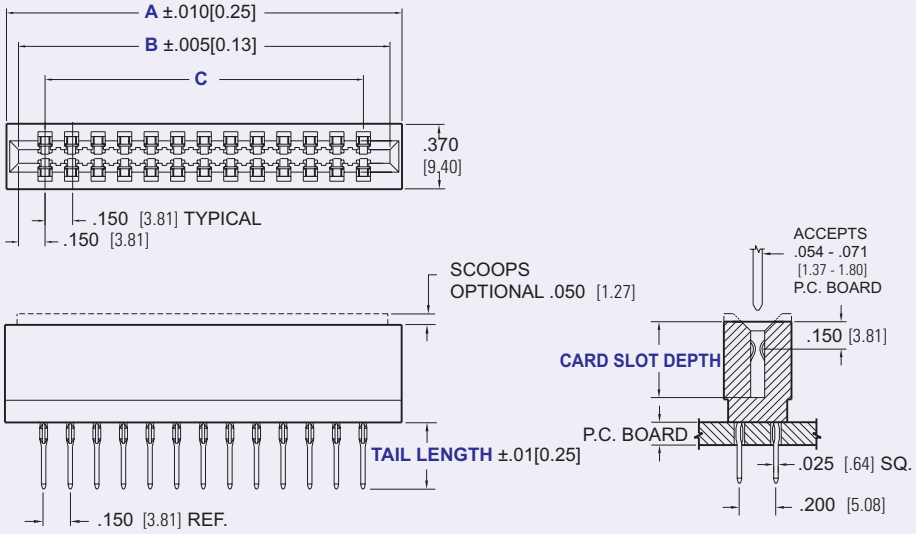

Dimensions are in inch [mm]

BODY STYLE

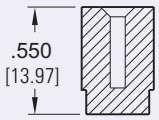

STYLE 1

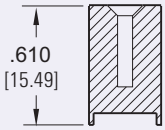

STYLE 2

PART NUMBERING

40 | XX — X | X — X | X — XX — XXX

SERIES CODE
.150” x .200” Contact Spacing

NO. CONTACT PAIRS
01 - 43

SCOOPS
S = With
N = Without

BODY STYLE
1 = .550 [13.97]
2 = .610 [15.49]

CARD SLOT DEPTH
1 = .415 [10.54]
2 = .350 [8.89]
3 = .300 [7.62]

TAIL LENGTH

BODY STYLE 1	BODY STYLE 2
1 = .190 [4.83]	1 = .190 [4.83]
2 = .375 [9.53]	2 = .315 [8.00]
3 = .465 [11.81]	3 = .405 [10.29]
4 = .625 [15.88]	4 = .565 [14.35]
5 = .710 [18.03]	5 = .650 [16.51]

PLATING
50µ” Nickel Underplate

CONTACT	TAIL
10 = 10µ” Au	100µ” Sn
20 = 15µ” Au	100µ” Sn
30 = 30µ” Au	100µ” Sn
40 = 10µ” Au	5µ” Au
50 = 15µ” Au	5µ” Au
60 = 30µ” Au	5µ” Au

CUSTOM VARIATION
CONSULT FACTORY

CONSULT FACTORY FOR CONNECTORS BUILT TO YOUR SPECIFICATION

4300 Series Card Edge Connector
.150” X .200” Contact Spacing, Press Fit

Specifications

Insulator Material: Glass filled polyester, type PBT, 94 V-O, UL Rated.
Contact Material: Phosphor Bronze Alloy
Contact Plating: Gold and/or Tin over .000050” Nickel, (See Contact Plating Options).
Current Rating: 5 amp at 30°C
Contact Resistance:
Contact to Daughter Card:
10 m Ω max.
Compliant section to P.T.H.:
2 m Ω max.
Insulation Resistance:
5000 M Ω min.
Dielectric Withstand Voltage:
1800 V AC
Daughter Board Insertion Force:
16 oz max. per contact pair when tested with a .071” thick gage.
Daughter Board Withdrawal Force:
1 oz min. per contact pair when tested with a .054” thick gage.
Compliant Section Insertion Force:
40 lbs max per contact
Compliant Section Withdrawal Force:
10 lbs min. per contact
Recommended Board Thickness:
.093”+
Recommended PCB Layout Page A-33
Operating Temperature:
-54°C to +125°C

Recognized under the recognized component Program of Underwriters Laboratories, Inc.
File Numbers: E146967 and E176234

Features

- Flat Plate Installation eliminates the need for secondary operation tooling which can damage the connector.
- Extra large chamfered entry
- Conforms to Bell-core spec TR-TSY-00078
- Extended card scoops available
- Replaceable contacts
- Molded in polarization available between contact, or on contact position.
- De-population of contacts per customer specification.
- Available in selective gold plate at contact point
- Many other custom options available, including, but not limited to:
  - Single or Both Ends Open
  - Shorting Contacts

For drawings, technical data or samples, contact E.C.S. at (714) 895-6351

Recommended Hole Size

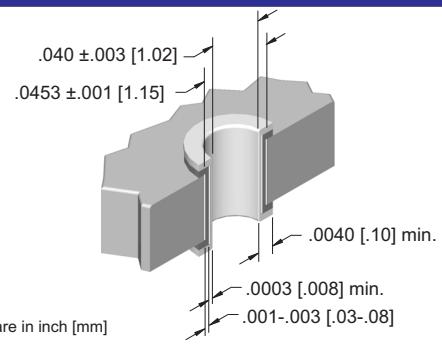

Dimensions are in inch [mm]

Drilled Hole Diameter	Plating Thickness	Hole Diameter	Pad Diameter
.0453±.001 [1.15]	Copper .001-.003 [.03-.08]	After Plating .040±.003 [1.02]	.065 [1.65]
	Tin / Lead .0003 [.008]min.		

NO. OF POS./CONTACTS	A	B	C
06/12	1.186 [30.12]	1.050 [26.67]	0.750 [19.05]
10/20	1.786 [45.36]	1.650 [41.91]	1.350 [46.29]
12/24	2.086 [52.98]	1.950 [49.53]	1.650 [41.91]
15/30	2.536 [64.41]	2.300 [58.42]	2.100 [53.34]
18/36	2.986 [75.84]	2.850 [72.39]	2.550 [64.77]
20/40	3.286 [83.41]	3.150 [80.01]	2.850 [72.39]
22/44	3.586 [91.08]	3.450 [86.63]	3.150 [80.01]
25/50	4.036 [102.51]	3.900 [99.06]	3.600 [91.44]
28/56	4.486 [113.94]	4.350 [110.49]	4.050 [102.87]
30/60	4.786 [121.56]	4.650 [118.11]	4.350 [110.49]
31/62	4.936 [125.37]	4.800 [121.92]	4.500 [114.30]
35/70	5.536 [140.61]	5.400 [137.16]	5.100 [129.54]
36/72	5.686 [144.42]	5.550 [140.97]	5.250 [133.35]
40/80	6.286 [159.66]	6.150 [156.21]	5.850 [148.59]
43/86	6.736 [171.09]	6.600 [167.64]	6.300 [160.02]

For reference only, can go 1 through 43 positions.

Dimensions are in inch [mm]

.150 x .200” Contact Spacing, Press Fit

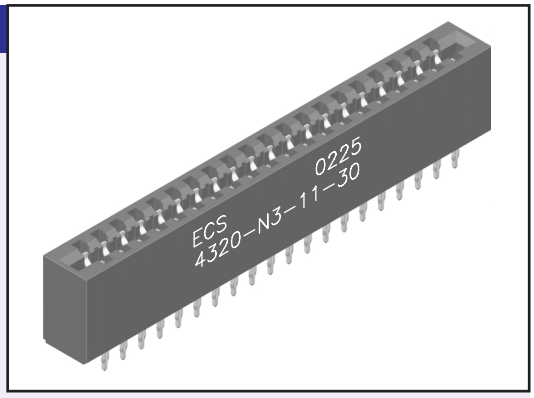

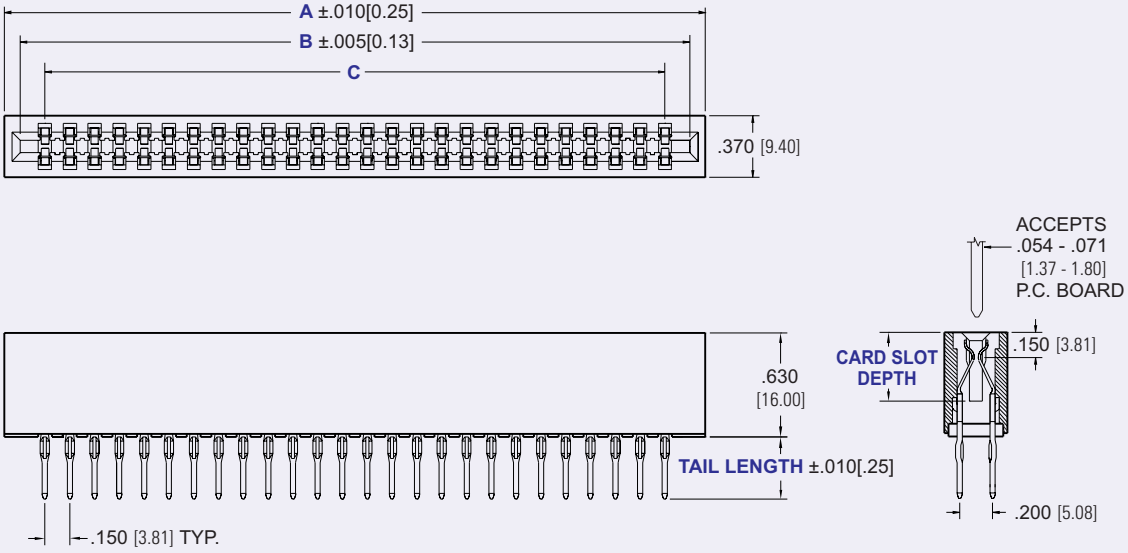

Dimensions are in inch [mm]

PART NUMBERING

43 | XX — X | 3 — X | X — XX — XXX

SERIES CODE
.150” X .200” Contact Spacing

NO. CONTACT PAIRS
01 - 43

SCOOPS
S = With
N = Without

TAIL LENGTH

.025 [.064] SQ.	.031 [.079] SQ.
1 = .190 [4.83]	A = .190 [4.83]
2 = .295 [7.49]	B = .295 [7.49]
3 = .385 [9.78]	C = .385 [9.78]
4 = .545 [13.84]	D = .545 [13.84]
5 = .595 [15.11]	E = .595 [15.11]

CARD SLOT DEPTH
1 = .415 [10.54]
2 = .350 [8.89]
3 = .300 [7.62]

PLATING
50µ” Nickel Underplate

CONTACT	TAIL
10 = 10µ” Au	100µ” Sn
20 = 15µ” Au	100µ” Sn
30 = 30µ” Au	100µ” Sn
40 = 10µ” Au	5µ” Au
50 = 15µ” Au	5µ” Au
60 = 30µ” Au	5µ” Au

CUSTOM VARIATION
CONSULT FACTORY

CONSULT FACTORY FOR CONNECTORS BUILT TO YOUR SPECIFICATION

4500 Series Card Edge Connector
.150” X .150” Contact Spacing, Press Fit

Specifications

Insulator Material: Glass filled polyester, type PBT, 94 V-O, UL Rated.
Contact Material: Phosphor Bronze Alloy
Contact Plating: Gold and/or Tin over .000050” Nickel, (See Contact Plating Options).
Current Rating: 5 amp at 30°C
Contact Resistance:
Contact to Daughter Card:
10 m max.
Compliant section to P.T.H.:
2 m max.
Insulation Resistance:
5000 M min.
Dielectric Withstand Voltage:
1800 V AC
Daughter Board Insertion Force:
16 oz max. per contact pair when tested with a .071” thick gage.
Daughter Board Withdrawal Force:
1 oz min. per contact pair when tested with a .054” thick gage.
Compliant Section Insertion Force:
40 lbs max per contact
Compliant Section Withdrawal Force:
10 lbs min. per contact
Recommended Board Thickness:
.093”+
Recommended PCB Layout Page A-33
Operating Temperature:
-54°C to +125°C

Recognized under the recognized component Program of Underwriters Laboratories, Inc.
File Numbers: E146967 and E176234

Features

- Special tool to installed into motherboard
- Extra large chamfered entry
- Conforms to Bell-core spec TR-TSY-00078
- Extended card scoops available
- Replaceable contacts
- Molded in polarization available between contact, or on contact position.
- De-population of contacts per customer specification.
- Available in selective gold plate at contact point
- Many other custom options available, including, but not limited to:
  - Single or Both Ends Open
  - Shorting Contacts

For drawings, technical data or samples, contact E.C.S. at (714) 895-6351

Recommended Hole Size

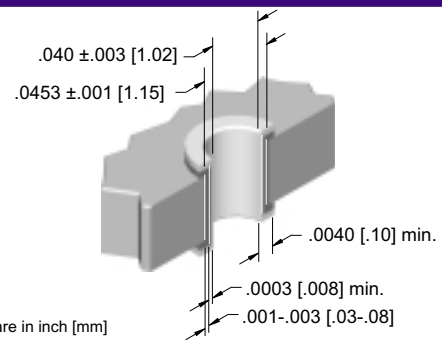

Dimensions are in inch [mm]

Drilled Hole Diameter	Plating Thickness	Hole Diameter	Pad Diameter
.0453±.001 [1.15]	Copper .001-.003 [.03-.08] Tin / Lead .0003 [.008]min.	After Plating .040±.003 [1.02]	.065 [1.65]

TOOL ASSISTED CONNECTORS
TOOL P/N 45150-491

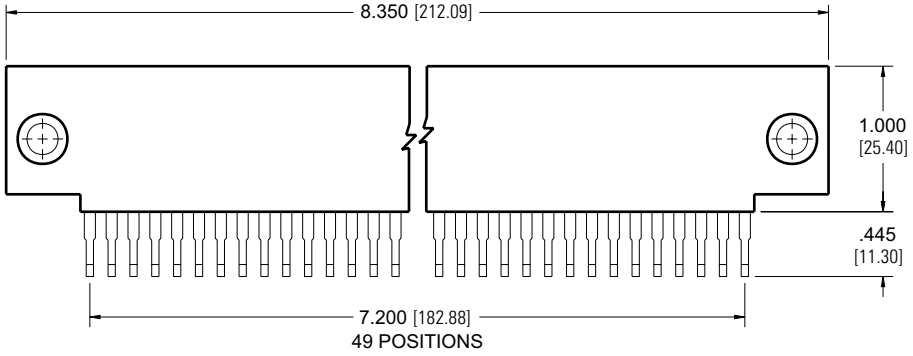

.150” x .150” Contact Spacing, Press Fit

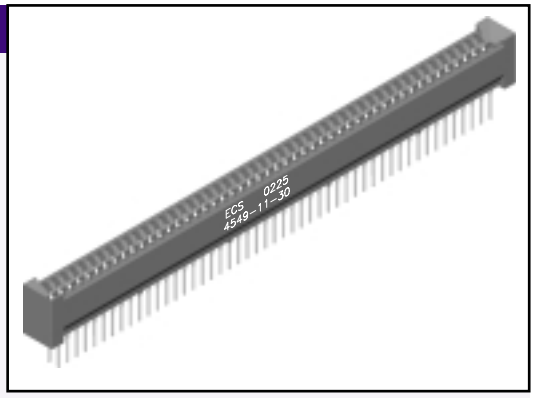

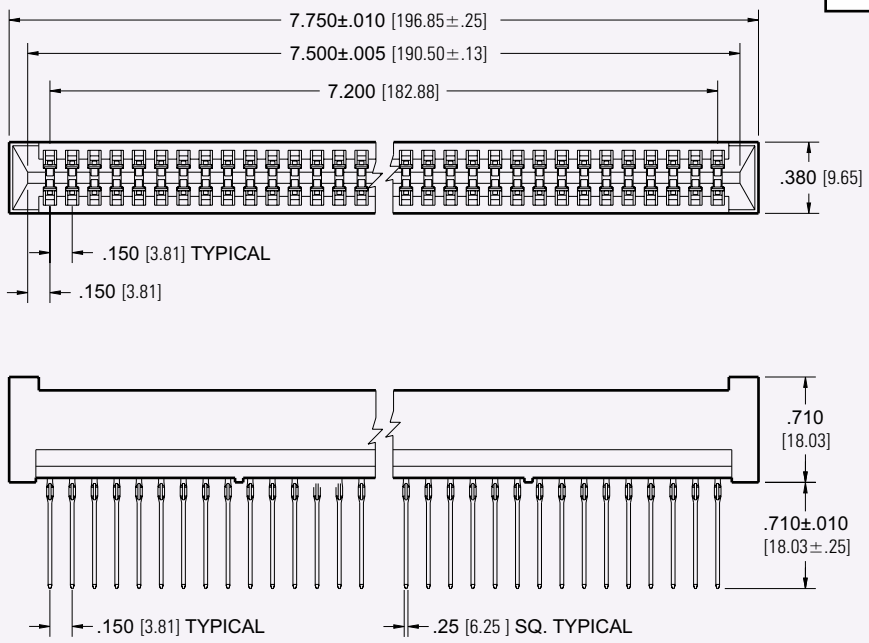

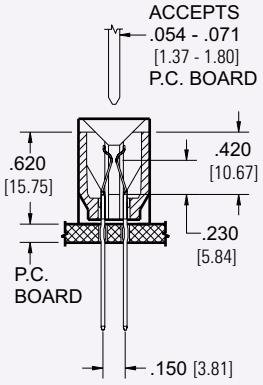

Dimensions are in inch [mm]

PART NUMBERING

45 | 49 — 1 | 1 — 30 — XXX

SERIES CODE
.150” X .150” Contact Spacing

NO. CONTACT PAIRS

CARD SLOT DEPTH
1 = .420 [10.67]
Consult factory for other card slot depths

TAIL LENGTH
1 = .710 [18.03]
Consult factory for other tail lengths

PLATING
.000050” nickel underplate

CONTACT	TAIL
30 = 30µ” Au	100µ” Sn

Consult factory for other plating

CUSTOM VARIATION
CONSULT FACTORY

CONSULT FACTORY FOR CONNECTORS BUILT TO YOUR SPECIFICATION

4600 Series Card Edge Connector
.150” X .188” Contact Spacing, .045 sq. Pin, Press Fit

Specifications

Insulator Material: Glass filled polyester, type PBT, 94 V-O, UL Rated.
Contact Material: Phosphor Bronze Alloy
Contact Plating: Gold and/or Tin over .000050” Nickel, (See Contact Plating Options).
Current Rating: 5 amp at 30°C
Contact Resistance:
Contact to Daughter Card:
10 m max.
Compliant section to P.T.H.:
2 m max.
Insulation Resistance:
5000 M min.
Dielectric Withstand Voltage:
1800 V AC
Daughter Board Insertion Force:
16 oz max. per contact pair when tested with a .071” thick gage.
Daughter Board Withdrawal Force:
1 oz min. per contact pair when tested with a .054” thick gage.
Compliant Section Insertion Force:
40 lbs max. per contact
Compliant Section Withdrawal Force:
10 lbs min. per contact
Recommended Board Thickness:
.093”+
Recommended PCB Layout Page A-33
Operating Temperature:
-54°C to +125°C

Recognized under the recognized component Program of Underwriters Laboratories, Inc.
File Numbers: E146967 and E176234

Features

- Extra large chamfered entry
- Conforms to Bell-core spec TR-TSY-00078
- Extended card scoops available
- Replaceable contacts
- Molded in polarization available between contact, or on contact position.
- De-population of contacts per customer specification.
- Available in selective gold plate at contact point
- Accommodates .062 (.008) PC Board
- Bifurcated contacts
- Many custom options available, consult factory

For drawings, technical data or samples, contact E.C.S. at (714) 895-6351

Recommended Hole Size

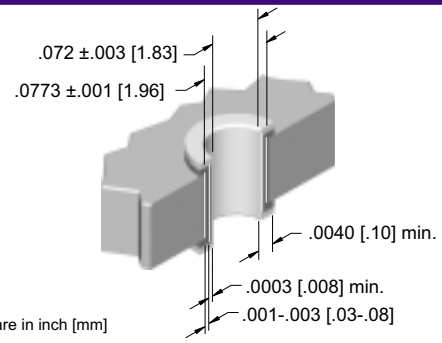

Dimensions are in inch [mm]

Drilled Hole Diameter	Plating Thickness	Hole Diameter	Pad Diameter
.0773±.001 [1.96]	Copper .001-.003 [.03-.08]	After Plating .072±.003 [1.83]	.097 [2.46]
	Tin / Lead .0003 [.008]min.		

NO. OF POS./CONTACTS	A	B	C	D	E	F
06/12	1.750 [44.45]	1.500 [38.10]	1.190 [30.23]	1.050 [26.67]	0.750 [19.05]	1.000 [25.40]
10/20	2.350 [59.69]	2.100 [53.34]	1.790 [45.47]	1.650 [41.91]	1.350 [34.29]	1.600 [40.64]
15/30	3.100 [78.74]	2.850 [72.39]	2.540 [64.52]	2.400 [60.96]	2.100 [53.34]	2.350 [59.69]
18/36	3.550 [90.17]	3.300 [83.82]	2.990 [75.95]	2.850 [72.39]	2.550 [64.77]	2.800 [71.12]
22/44	4.150 [105.41]	3.900 [99.06]	3.590 [91.19]	3.450 [87.63]	3.150 [80.01]	3.400 [86.36]
26/52	4.750 [120.65]	4.500 [114.30]	4.190 [106.43]	4.050 [102.87]	3.750 [95.25]	4.000 [101.60]
28/56	5.050 [128.27]	4.800 [121.92]	4.490 [114.05]	4.350 [110.49]	4.050 [102.87]	4.300 [109.22]
30/60	5.350 [110.49]	5.100 [129.54]	4.790 [121.67]	4.650 [118.11]	4.350 [110.49]	4.600 [116.84]
40/80	6.880 [173.99]	6.600 [167.64]	6.290 [159.77]	6.150 [56.21]	5.850 [148.59]	6.100 [154.94]
43/86	7.300 [185.42]	7.050 [179.07]	6.740 [171.20]	6.600 [167.64]	6.550 [166.37]	6.465 [171.83]

For reference only, can go 1 through 43 positions.

Dimensions are in inch [mm]

MOUNTING STYLE

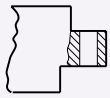

1= Clearance Hole

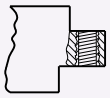

2 = #4-40 Threaded Insert

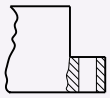

3 = Flush Mount

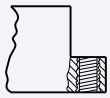

4 = #4-40 Threaded Insert

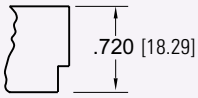

5 = No Mount Ear

.150” x .188” Contact Spacing, .045” sq. Pin, Press Fit

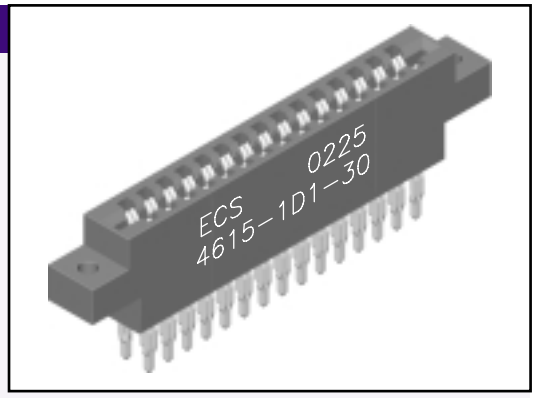

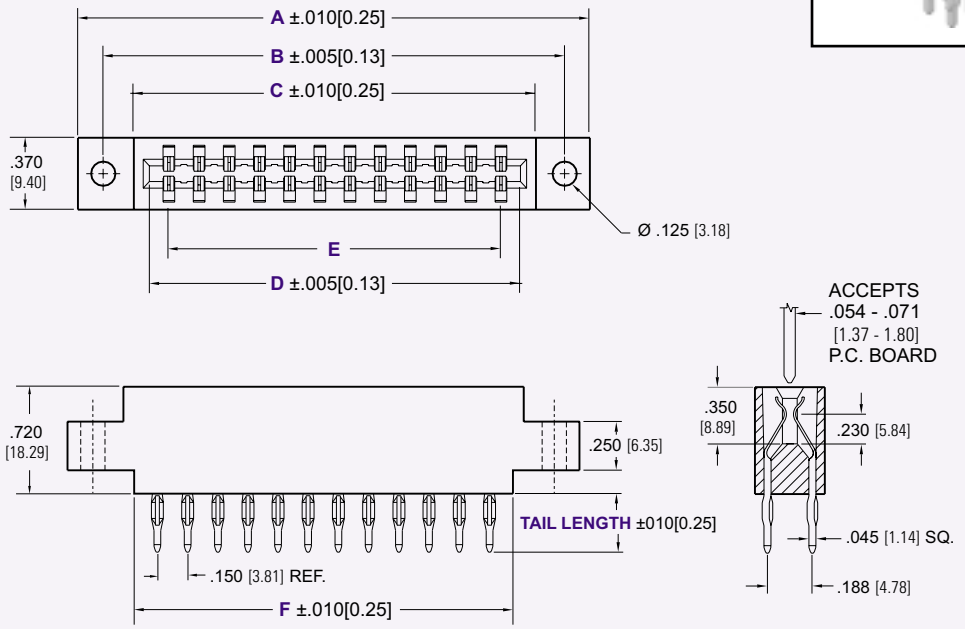

Dimensions are in inch [mm]

Read Out

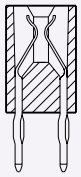

D = DUAL

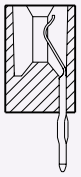

H = HALF LOADED

PART NUMBERING

46 | XX — X X X — XX — XXX

SERIES CODE
.150” X .188” Contact Spacing

NO. CONTACT PAIRS
01 - 43

MOUNTING STYLE
1 = Clearance Hole
2 = #4-40 Threaded Insert
3 = Flush Mount
4 = Flush Mount / #4-40 Threaded Insert
5 = No Mounting Ear

READ OUT
D = Dual Loaded
H = Half Loaded

TAIL LENGTH
1 = .250 [6.35]
2 = .570 [14.48]
3 = .750 [19.05]

PLATING
50µ” Nickel Underplate

CONTACT	TAIL
10 = 10µ” Au	100µ” Sn
20 = 15µ” Au	100µ” Sn
30 = 30µ” Au	100µ” Sn
40 = 10µ” Au	5µ” Au
50 = 15µ” Au	5µ” Au
60 = 30µ” Au	5µ” Au

CUSTOM VARIATION
Consult Factory

CONSULT FACTORY FOR CONNECTORS BUILT TO YOUR SPECIFICATION

3000 Series Card Edge Connector
.156” X .200” Contact Spacing, Press Fit

Specifications

Insulator Material: Glass filled polyester, type PBT, 94 V-O, UL Rated.
Contact Material: Phosphor Bronze Alloy
Contact Plating: Gold and/or Tin over .000050” Nickel, (See Contact Plating Options).
Current Rating: 5 amps at 30°C
Contact Resistance:
Contact to Daughter Card:
10 m Ω max.
Compliant section to P.T.H.:
2 m Ω max.
Insulation Resistance:
5000 M Ω min.
Dielectric Withstand Voltage:
1800 V AC
Daughter Board Insertion Force:
16 oz max. per contact pair when tested with a .071” thick gage.
Daughter Board Withdrawal Force:
1 oz min. per contact pair when tested with a .054” thick gage.
Compliant Section Insertion Force:
40 lbs max per contact
Compliant Section Withdrawal Force:
10 lbs min. per contact
Recommended Board Thickness:
.093”+
Recommended PCB Layout Page A-33
Operating Temperature:
-54°C to +125°C

Recognized under the recognized component Program of Underwriters Laboratories, Inc.
File Numbers: E146967 and E176234

Features

- Flat Plate Installation eliminates the need for secondary operation tooling which can damage the connector.
- Extra large chamfered entry
- Conforms to Bell-core spec TR-TSY-00078
- Extended card scoops available
- Replaceable contacts
- Molded in polarization available between contact, or on contact position.
- De-population of contacts per customer specification.
- Available in selective gold plate at contact point
- Many other custom options available, including, but not limited to:
  - Single or Both Ends Open
  - Shorting Contacts

For drawings, technical data or samples, contact E.C.S. at (714) 895-6351

Recommended Hole Size

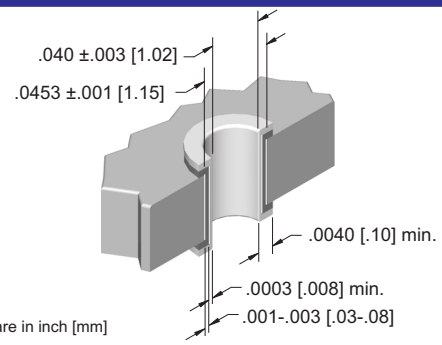

Dimensions are in inch [mm]

Drilled Hole Diameter	Plating Thickness	Hole Diameter	Pad Diameter
.0453±.001 [1.15]	Copper .001-.003 [.03-.08]	After Plating .040±.003 [1.02]	.065 [1.65]
	Tin / Lead .0003 [.008]min.		

NO. OF POS./CONTACTS	A	B	C
06/12	1.228 [31.19]	1.092 [27.74]	0.780 [19.81]
10/20	1.852 [47.04]	1.716 [43.59]	1.404 [35.66]
12/24	2.164 [54.97]	2.028 [51.51]	1.716 [43.59]
15/30	2.632 [66.85]	2.496 [63.40]	2.184 [55.47]
18/36	3.100 [78.74]	2.964 [75.29]	2.652 [67.36]
20/40	3.412 [86.67]	3.276 [83.21]	2.964 [75.29]
22/44	3.724 [94.59]	3.588 [91.14]	3.276 [83.21]
25/50	4.192 [106.48]	4.056 [103.02]	3.744 [95.10]
28/56	4.660 [118.36]	4.524 [114.91]	4.212 [106.99]
30/60	4.972 [126.29]	4.836 [122.83]	4.524 [114.91]
31/62	5.128 [130.25]	4.992 [126.80]	4.680 [118.87]
35/70	5.752 [146.10]	5.616 [142.65]	5.304 [137.72]
36/72	5.908 [150.06]	5.772 [146.61]	5.460 [138.68]
40/80	6.532 [165.91]	6.396 [162.46]	6.084 [154.53]
43/86	7.000 [177.80]	6.864 [174.35]	6.552 [166.42]

For reference only, can go 1 through 43 positions.

Dimensions are in inch [mm]

.156” x .200” Contact Spacing, Press Fit

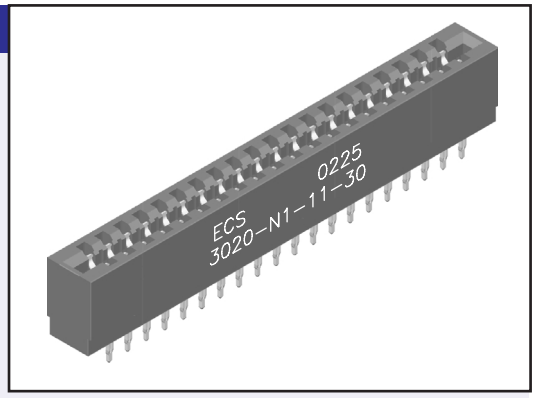

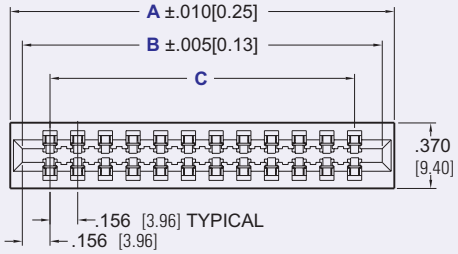

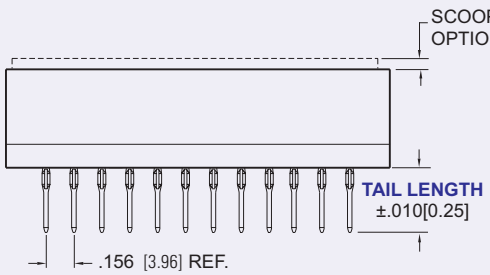

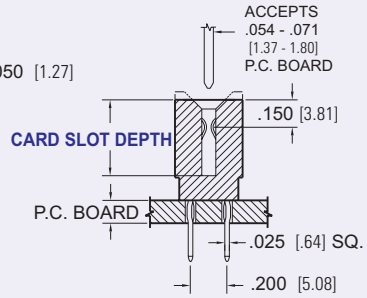

BODY STYLE

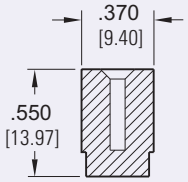

STYLE 1

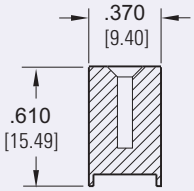

STYLE 2

Dimensions are in inches [mm]

PART NUMBERING

30 | XX — X | X — X | X — XX — XXX

SERIES CODE
.156” x .200” Contact Spacing

NO. CONTACT PAIRS
01 - 43

SCOOPS
S = With
N = Without

BODY STYLE
1 = .550 [13.97]
2 = .610 [15.49]

TAIL LENGTH

BODY STYLE 1	BODY STYLE 2
1 = .190 [4.83]	1 = .190 [4.83]
2 = .375 [9.53]	2 = .315 [8.00]
3 = .465 [11.81]	3 = .405 [10.29]
4 = .625 [15.88]	4 = .565 [14.35]
5 = .710 [18.03]	5 = .650 [16.51]

CARD SLOT DEPTH
1 = .415 [10.54]
2 = .350 [8.89]
3 = .300 [7.62]

PLATING
50µ” Nickel Underplate

CONTACT	TAIL
10 = 10µ” Au	100µ” Sn
20 = 15µ” Au	100µ” Sn
30 = 30µ” Au	100µ” Sn
40 = 10µ” Au	5µ” Au
50 = 15µ” Au	5µ” Au
60 = 30µ” Au	5µ” Au

CUSTOM VARIATION
CONSULT FACTORY

CONSULT FACTORY FOR CONNECTORS BUILT TO YOUR SPECIFICATION

3000 Series Card Edge Connector
.156” X .200” Contact Spacing, Switching Contact

Specifications

Insulator Material: Glass filled polyester, type PBT, 94 V-O, UL Rated.
Contact Material: Phosphor Bronze Alloy
Contact Plating: Gold and/or Tin over .000050” Nickel, (See Contact Plating Options).
Current Rating: 5 amps at 30°C
Contact Resistance:
Contact to Daughter Card:
10 m Ω max.
Compliant section to P.T.H.:
2 m Ω max.
Insulation Resistance:
5000 M Ω min.
Dielectric Withstand Voltage:
1800 V AC
Daughter Board Insertion Force:
16 oz max. per contact pair when tested with a .071” thick gage.
Daughter Board Withdrawal Force:
1 oz min. per contact pair when tested with a .054” thick gage.
Compliant Section Insertion Force:
40 lbs max per contact
Compliant Section Withdrawal Force:
10 lbs min. per contact
Recommended Board Thickness:
.093”+
Recommended PCB Layout Page A-33
Operating Temperature:
-54°C to +125°C

Recognized under the recognized component Program of Underwriters Laboratories, Inc.
File Numbers: E146967 and E176234

Features

- Flat Plate Installation eliminates the need for secondary operation tooling which can damage the connector.
- Extra large chamfered entry
- Conforms to Bell-core spec TR-TSY-00078
- Extended card scoops available
- Replaceable contacts
- Molded in polarization available between contact, or on contact position.
- De-population of contacts per customer specification.
- Available in selective gold plate at contact point
- Many other custom options available, including, but not limited to:
  - Single or Both Ends Open
  - Selectively Loaded with Standard Signal Contacts

For drawings, technical data or samples, contact E.C.S. at (714) 895-6351

Recommended Hole Size

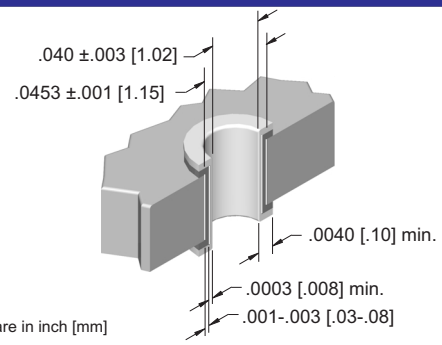

Dimensions are in inch [mm]

Drilled Hole Diameter	Plating Thickness	Hole Diameter	Pad Diameter
.0453±.001 [1.15]	Copper .001-.003 [.03-.08]	After Plating .040±.003 [1.02]	.065 [1.65]
	Tin / Lead .0003 [.008]min.		

NO. OF POS./CONTACTS	A	B	C
06/12	1.228 [31.19]	1.092 [27.74]	0.780 [19.81]
10/20	1.852 [47.04]	1.716 [43.59]	1.404 [35.66]
12/24	2.164 [54.97]	2.028 [51.51]	1.716 [43.59]
15/30	2.632 [66.85]	2.496 [63.40]	2.184 [55.47]
18/36	3.100 [78.74]	2.964 [75.29]	2.652 [67.36]
20/40	3.412 [86.67]	3.276 [83.21]	2.964 [75.29]
22/44	3.724 [94.59]	3.588 [91.14]	3.276 [83.21]
25/50	4.192 [106.48]	4.056 [103.02]	3.744 [95.10]
28/56	4.660 [118.36]	4.524 [114.91]	4.212 [106.99]
30/60	4.972 [126.29]	4.836 [122.83]	4.524 [114.91]
31/62	5.128 [130.25]	4.992 [126.80]	4.680 [118.87]
35/70	5.752 [146.10]	5.616 [142.65]	5.304 [137.72]
36/72	5.908 [150.06]	5.772 [146.61]	5.460 [138.68]
40/80	6.532 [165.91]	6.396 [162.46]	6.084 [154.53]
43/86	7.000 [177.80]	6.864 [174.35]	6.552 [166.42]

For reference only, can go 1 through 43 positions.

Dimensions are in inch [mm]

.156” x .200” Contact Spacing, Switching Contact

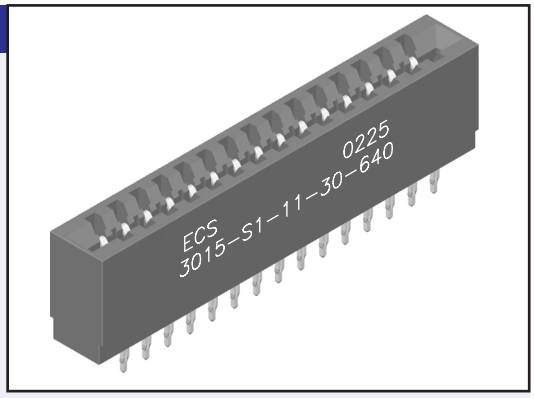

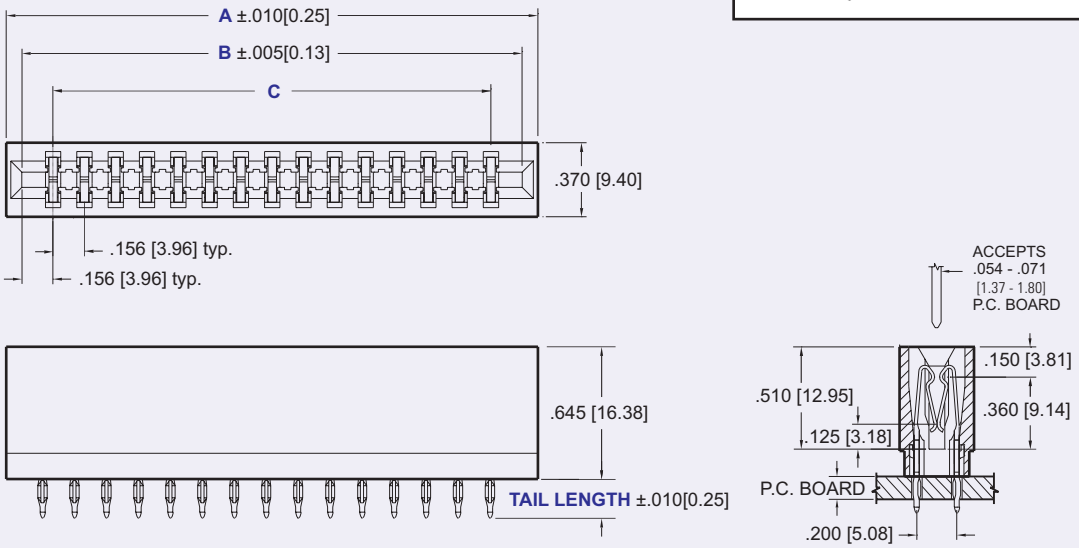

Dimensions are in inches [mm]

PART NUMBERING

30 | XX — S | 1 — 1 | X — XX — 640

SERIES CODE
.156” x .200” Contact Spacing

NO. CONTACT PAIRS
01 - 43

TAIL LENGTH

1 = .190 [4.83]
2 = .375 [9.53]
3 = .465 [11.81]
4 = .625 [15.88]
5 = .710 [18.03]

PLATING
50µ” Nickel Underplate

CONTACT	TAIL
10 = 10µ” Au	100µ” Sn
20 = 15µ” Au	100µ” Sn
30 = 30µ” Au	100µ” Sn
40 = 10µ” Au	5µ” Au
50 = 15µ” Au	5µ” Au
60 = 30µ” Au	5µ” Au

CONSULT FACTORY FOR CONNECTORS BUILT TO YOUR SPECIFICATION

3400 Series Card Edge Connector
.156” X .188” Contact Spacing, .045 sq. Pin, Press Fit

Specifications

Insulator Material: Glass filled polyester, type PBT, 94 V-O, UL Rated.
Contact Material: Phosphor Bronze Alloy
Contact Plating: Gold and/or Tin over .000050” Nickel, (See Contact Plating Options).
Current Rating: 5 amp at 30°C
Contact Resistance:
Contact to Daughter Card:
10 m Ω max.
Compliant section to P.T.H.:
2 m Ω max.
Insulation Resistance:
5000 M Ω min.
Dielectric Withstand Voltage:
1800 V AC
Daughter Board Insertion Force:
16 oz max. per contact pair when tested with a .071” thick gage.
Daughter Board Withdrawal Force:
1 oz min. per contact pair when tested with a .054” thick gage.
Compliant Section Insertion Force:
40 lbs max. per contact
Compliant Section Withdrawal Force:
10 lbs min. per contact
Recommended Board Thickness:
.093”+
Recommended PCB Layout Page A-33
Operating Temperature:
-54°C to +125°C

Recognized under the recognized component Program of Underwriters Laboratories, Inc.
File Numbers: E146967 and E176234

Features

- Extra large chamfered entry
- Conforms to Bell-core spec TR-TSY-00078
- Extended card scoops available
- Replaceable contacts
- Molded in polarization available between contact, or on contact position.
- De-population of contacts per customer specification.
- Available in selective gold plate at contact point
- Accommodates .062 (.008) PC Board
- Bifurcated contacts
- Many custom options available, consult factory

For drawings, technical data or samples, contact E.C.S. at (714) 895-6351

Recommended Hole Size

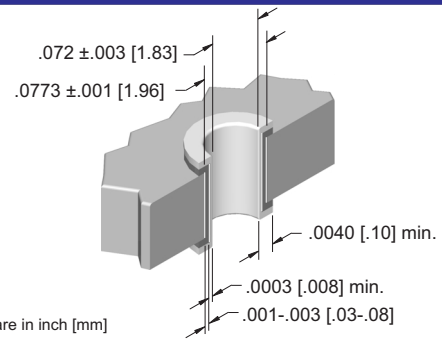

Dimensions are in inch [mm]

Drilled Hole Diameter	Plating Thickness	Hole Diameter	Pad Diameter
.0773±.001 [1.96]	Copper .001-.003 [.03-.08]	After Plating .072±.003 [1.83]	.097 [2.46]
	Tin / Lead .0003 [.008]min.		

NO. OF POS./CONTACTS	A	B	C	D	E
06/12	1.808 [45.92]	1.532 [38.91]	1.226 [31.14]	1.106 [28.09]	0.780 [19.81]
10/20	2.432 [61.77]	2.156 [54.76]	1.850 [46.99]	1.730 [43.94]	1.404 [35.66]
15/30	3.212 [81.59]	2.936 [74.57]	2.630 [66.80]	2.510 [63.75]	2.184 [55.47]
18/36	3.680 [93.47]	3.404 [86.46]	3.098 [78.69]	2.978 [75.64]	2.652 [67.36]
22/44	4.304 [109.32]	4.028 [102.31]	3.722 [94.54]	3.602 [91.49]	3.276 [83.21]
28/56	5.240 [133.10]	4.964 [126.09]	4.658 [118.31]	4.538 [115.27]	4.212 [106.99]
30/60	5.552 [141.02]	5.276 [134.01]	4.970 [126.24]	4.850 [123.19]	4.524 [114.91]
40/80	7.112 [180.65]	6.836 [173.63]	6.530 [165.86]	6.410 [162.81]	6.084 [154.53]
43/86	7.580 [192.53]	7.310 [185.67]	6.998 [177.75]	6.878 [174.70]	6.552 [166.43]

For reference only, can go 1 through 43 positions.

Dimensions are in inch [mm]

MOUNTING STYLE

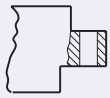

1= Clearance Hole

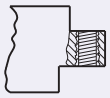

2 = #4-40 Threaded Insert

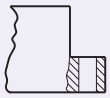

3 = Flush Mount

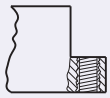

4 = #4-40 Threaded Insert

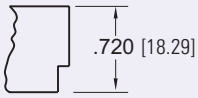

5 = No Mounting Ear

.156” x .188” Contact Spacing, .045” sq. Pin, Press Fit

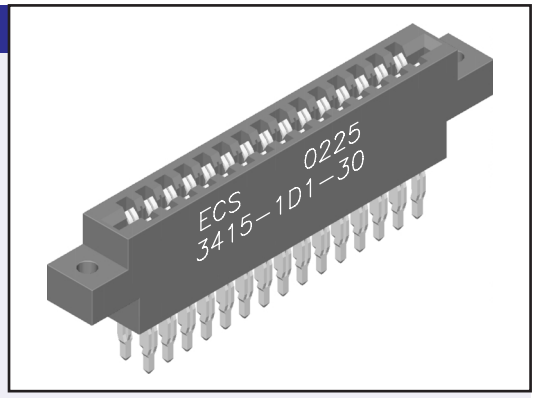

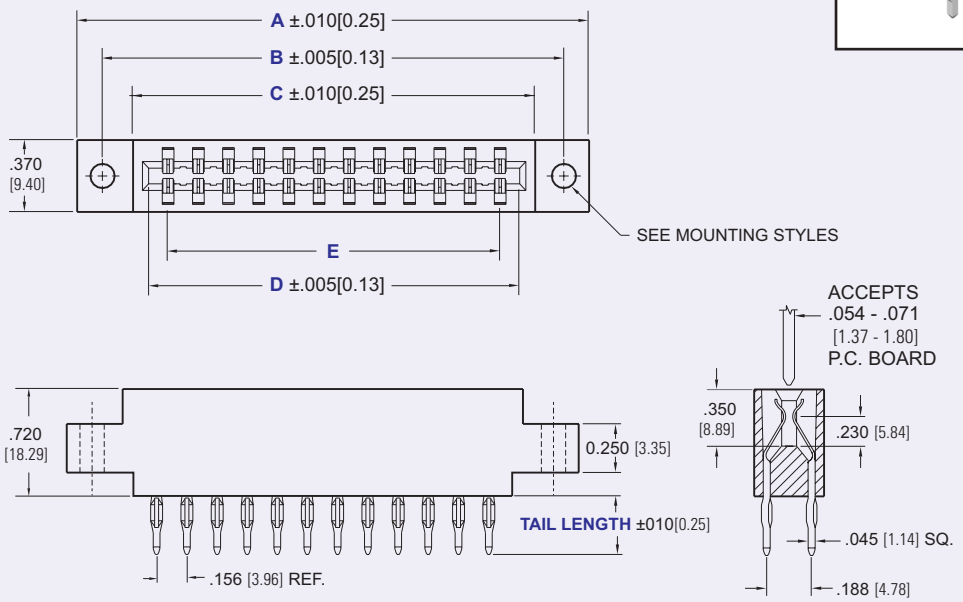

Dimensions are in inch [mm]

Read Out

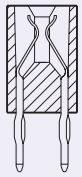

D = DUAL

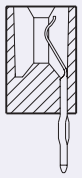

H = HALF LOADED

PART NUMBERING

34 | XX — X X X — XX — XXX

SERIES CODE
.156” X .188” Contact Spacing

NO. CONTACT PAIRS
01 - 43

MOUNTING STYLE
1 = Clearance Hole
2 = #4-40 Threaded Insert
3 = Flush Mount
4 = Flush Mount / #4-40 Threaded Insert
5 = No Mounting Ear

READ OUT
D = Dual Loaded
H = Half Loaded

TAIL LENGTH
1 = .250 [6.35]
2 = .570 [14.48]
3 = .750 [19.05]

CUSTOM VARIATION
Consult Factory

PLATING
50µ” Nickel Underplate

CONTACT	TAIL
10 = 10µ” Au	100µ” Sn
20 = 15µ” Au	100µ” Sn
30 = 30µ” Au	100µ” Sn
40 = 10µ” Au	5µ” Au
50 = 15µ” Au	5µ” Au
60 = 30µ” Au	5µ” Au

CONSULT FACTORY FOR CONNECTORS BUILT TO YOUR SPECIFICATION

1600 Series AGP Card Edge Connector
.039 [1.00] Contact Centers

Specifications

- Insulator Material: Glass-filled PCT, 94V-O Rated.
- Contact Material: Copper Alloy
- Current Rating: 1 Amp max.
- Voltage: 250 V AC
- Insulation Resistance: 800M Ω min.
- Dielectric Withstand Voltage: 400 V
- Voltage Drop: 30m volt at rated current
- Contact Resistance: 30m Ω max. at rate current
- Board Insertion Force to PCB: 15 lbs. max.
- Durability: 50 cycles
- Temperature: -55ºC to +125ºC

Recognized under the recognized component Program of Underwriters Laboratories, Inc.
File Numbers: E146967 and E176234

Features

- Used with Accelerated Graphics Cards
- Interconnect supports high performance 3D graphics and full motion video.
- Compatible with AGP 1X, 2X, and 4X
- Metal fork lock PCB retention
- Provides low card insertion force
- SMT process compatible

For drawings, technical data or samples, contact E.C.S. at (714) 895-6351

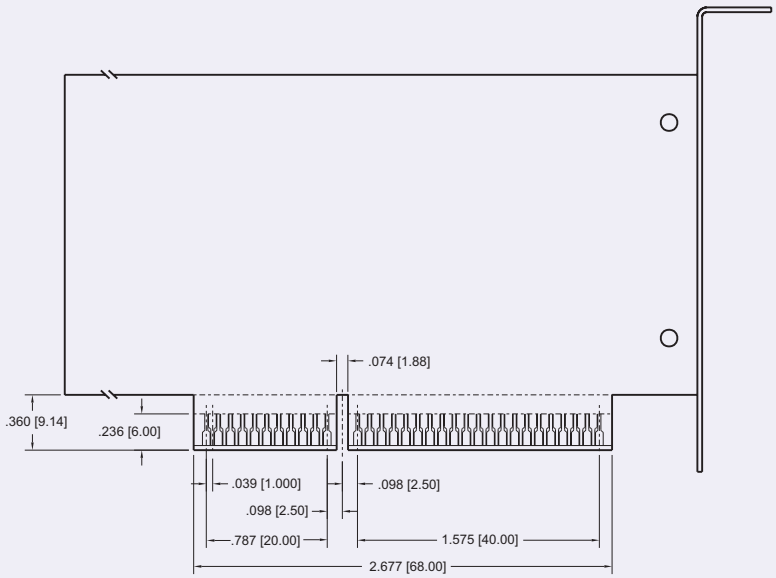

RECOMMENDED MODULE THICKNESS: .062 [1.57]

MOUNTING STYLE

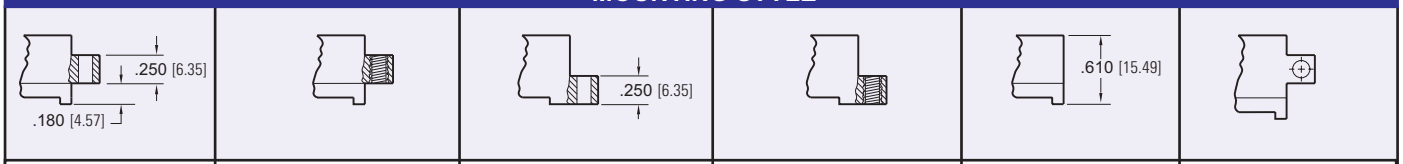

1= Clearance Hole	2= #4-40 Threaded Insert	3= Flush Mount	4= Flush Mount / #4-40	5= No Mounting Ear	6= Side Mounting

ELECTRONIC CONNECTOR SERVICE INC. 11880 WESTERN AVE. STANTON, CA 90680 TOLL FREE (877) ECS-CONN TEL (714) 895-6351 FAX (714) 894-1858
WWW.ECSCONN.COM

.039 [0.99] Contact Centers, AGP Connector

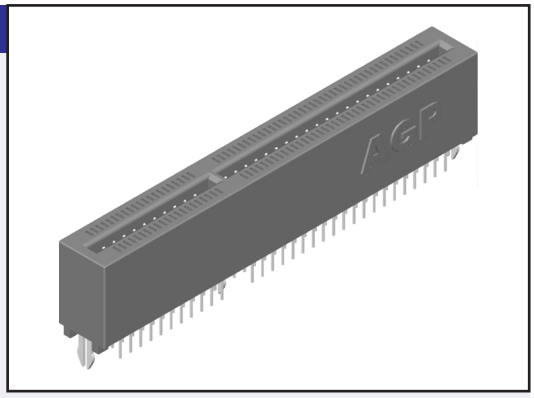

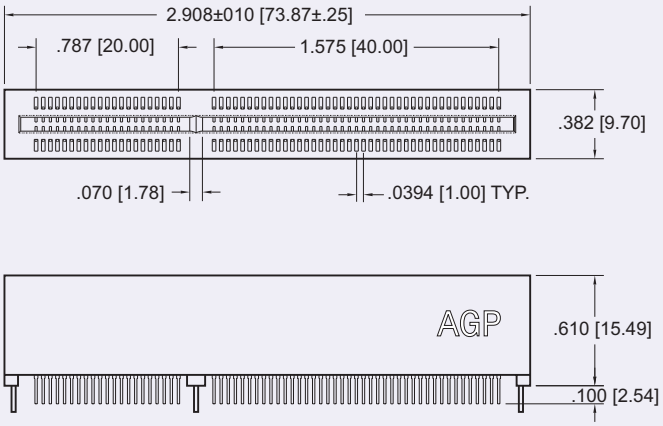

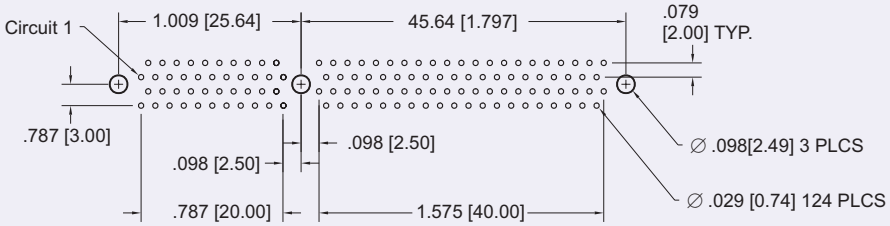

PCB LAYOUT

Dimensions are in inch [mm]

PART NUMBERING

16 XX — N X — 1 X — XX — XXX

SERIES CODE
.039 [1.00] AGP Card Edge

NO. CONTACT PAIRS
31 (124 Circuit)

MOUNTING STYLE
1 = Clearance Hole
2 = #4-40 Threaded Insert
3 = Flush Mount
4 = Flush Mount / #4-40 Threaded Insert
5 = No Mounting Ears
6 = Side Mounting

TERMINATION TYPE
1 = Staggered Dip Solder
2 = Right Angle (not shown)

PLATING
50µ" Nickel Underplate

CONTACT	TAIL
01 = Flash Au	100µ" Sn
10 = 10µ" Au	100µ" Sn
20 = 15µ" Au	100µ" Sn
30 = 30µ" Au	100µ" Sn

CUSTOM VARIATION
CONSULT FACTORY

CONSULT FACTORY FOR CONNECTORS BUILT TO YOUR SPECIFICATION

1700 Series MCA Card Edge Connector
.050 [1.27] Contact Centers

Specifications

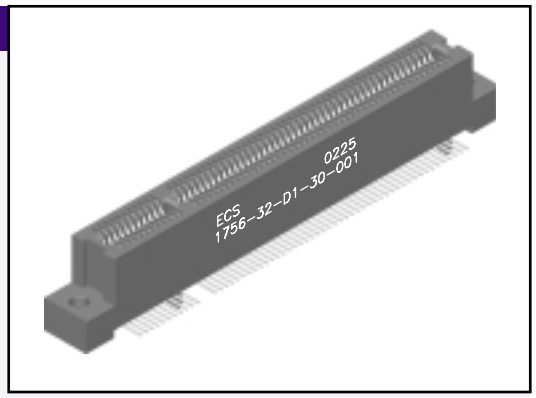

- Accommodates .062 ± .008 PC Board
- Ryton or Thermx insulator
- 1 amp current rating
- Insulation Resistance: 5000 M min.
- Dielectric Withstand Voltage: 250 VDC
- Voltage Drop: 30 m volt at rated current
- Contact Resistance: 30 m max. at rate current
- Board Insertion Force: 16 oz. max. per contact pair using .062 [1.58mm] thick steel test blade.
- Board Withdrawal Force: 1 oz. Min. per contact pair using .062 [1.58mm] thick steel test blade.
- Operating Temperature: -54° to 125° C

Recognized under the recognized component Program of Underwriters Laboratories, Inc.
File Numbers: E146967 and E176234

For drawings, technical data or samples, contact E.C.S. at (714) 895-6351

MOUNTING STYLE

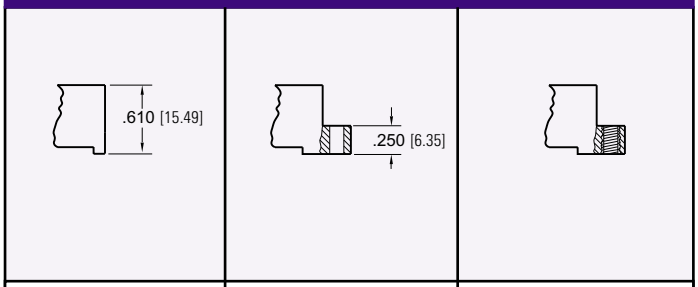

1 = No Mounting Ear	2 = Flush Mount	3 = #4-40 Threaded Insert

TERMINATION TYPE

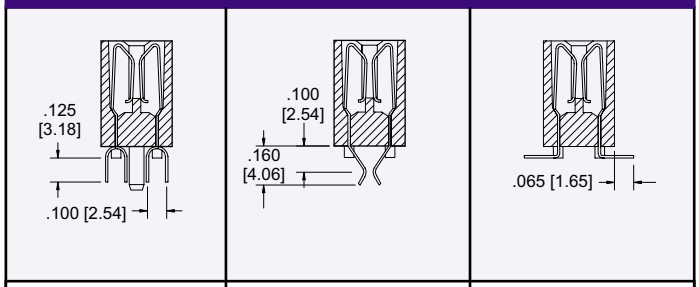

1 = Staggered Dip Solder	2 = Card Extender	3 = Surface Mount

PART NUMBERING

17 XX — X X — D X — XX — XXX

SERIES CODE
.050" Center MCA Card Edge Connectors

NO. CONTACT PAIRS
56 = 11/45
66 = 11/45/10
91 = 42/49
106 = 11/45/50

TERMINATION TYPE
1 = Staggered Dip Solder
2 = Card Extender
3 = Surface Mount

MOUNTING STYLE
1 = No Mounting
2 = Flush Mounting
3 = Flush Mounting / Threaded Insert

MATERIALS
Insulator / Contact
1 = Ryton / Phosphor Bronze
2 = Ryton / Beryllium Copper
3 = Thermx / Phosphor Bronze
4 = Thermx / Beryllium Copper

PLATING
50µ" Nickel Underplate

CONTACT	TAIL
01 = Flash Au	100µ" Sn
10 = 10µ" Au	100µ" Sn
20 = 15µ" Au	100µ" Sn
30 = 30µ" Au	100µ" Sn

001 = Card Slot Barriers With Guide Posts
002 = Card Slot Barriers Without Guide Posts

.050 [1.27] Contact Centers, MCA Card Edge Connector

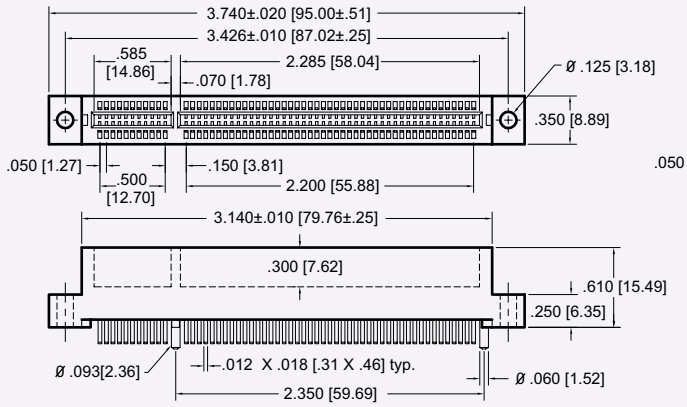

56 (11/45) POSITIONS

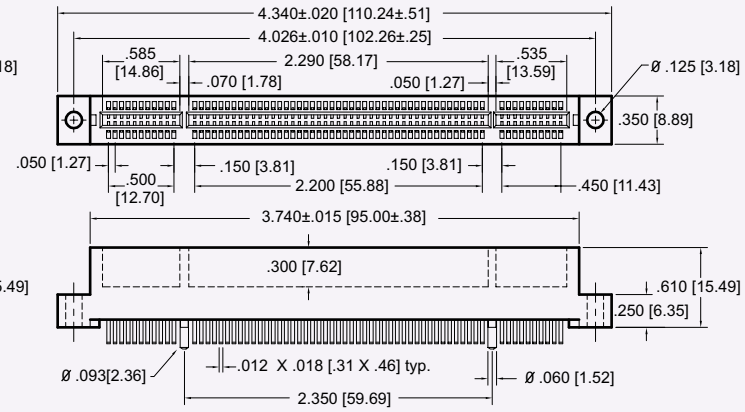

66 (11/45/10) POSITIONS

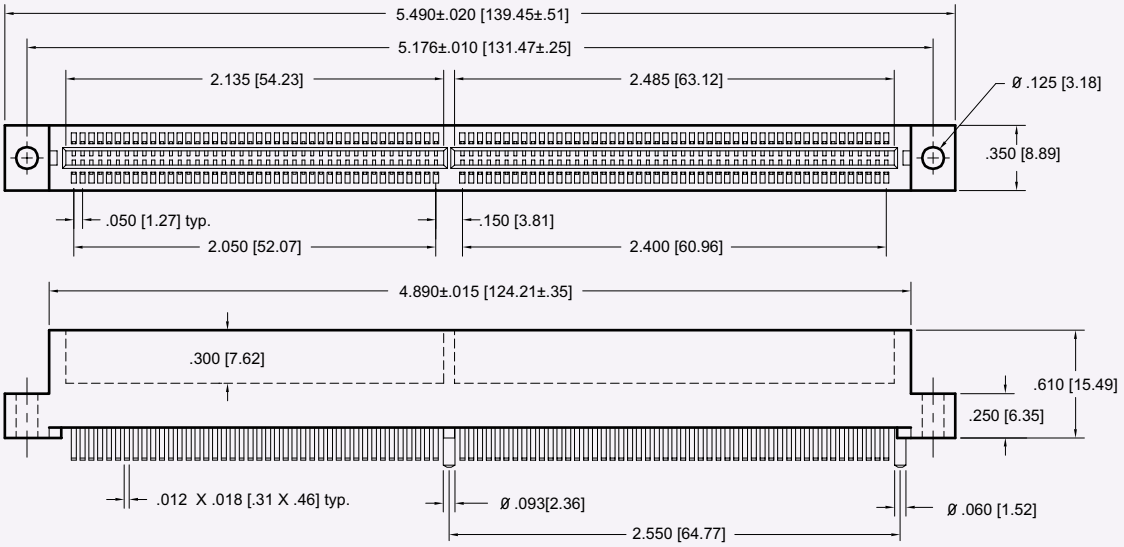

91 (42/49) POSITIONS

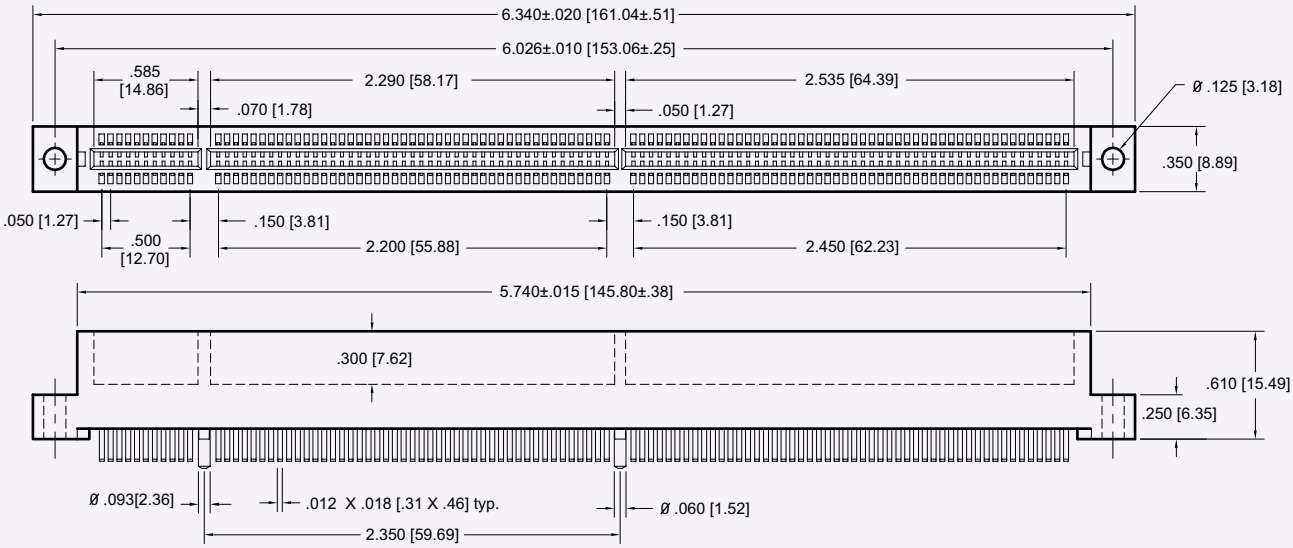

106 (11/45/50) POSITIONS

Dimensions are in inch [mm]

CONSULT FACTORY FOR CONNECTORS BUILT TO YOUR SPECIFICATION

1800 Series Card Edge Connector
.050 [1.27] Contact Centers

Specifications

- Accommodates .062 ± .008 PC Board
- 1 amp current rating
- Insulation Resistance: 5000 M
- Dielectric Withstand Voltage: 250 VDC
- Voltage Drop: 30 m volt at rated current
- Contact Resistance: 30 m max. at rated current
- Board Insertion Force: 16 oz. Max. per contact pair using .062 [1.58mm] thick steel test blade
- Board Withdrawal Force: 1 oz. Min. per contact pair using .062 [1.58mm] thick steel test blade.
- Operating Temperature: -54° to 125° C

Recognized under the recognized component Program of Underwriters Laboratories, Inc. File Numbers: E146967 and E176234

For drawings, technical data or samples, contact E.C.S. at (714) 895-6351

POS./CONTACTS	A	B	C	D	E
5/10	.200 [5.08]	.300 [7.62]	.490 [12.45]	.776 [19.71]	1.090 [27.69]
6/12	.250 [6.35]	.350 [8.89]	.540 [13.72]	.826 [20.98]	1.140 [28.96]
9/18	.400 [10.16]	.500 [12.70]	.690 [17.35]	.976 [24.96]	1.290 [32.77]
10/20	.450 [11.43]	.550 [13.97]	.740 [18.80]	1.026 [26.06]	1.340 [34.04]
14/28	.650 [16.51]	.750 [19.05]	.940 [23.88]	1.226 [31.14]	1.540 [39.12]
15/30	.700 [17.78]	.800 [20.32]	.990 [25.15]	1.276 [32.41]	1.590 [40.39]
20/40	.950 [24.13]	1.050 [26.67]	1.240 [31.50]	1.526 [38.76]	1.840 [46.74]
22/44	1.050 [26.67]	1.150 [29.21]	1.340 [34.04]	1.626 [41.30]	1.940 [49.28]
25/50	1.200 [30.48]	1.300 [33.02]	1.490 [37.85]	1.776 [45.11]	2.090 [53.09]
30/60	1.450 [36.83]	1.550 [39.37]	1.740 [44.20]	2.026 [51.46]	2.340 [59.44]
34/68	1.650 [41.91]	1.750 [44.45]	1.940 [49.28]	2.226 [56.54]	2.540 [64.52]
35/70	1.700 [43.18]	1.800 [45.72]	1.990 [50.55]	2.276 [57.81]	2.590 [65.79]
40/80	1.950 [49.53]	2.050 [52.07]	2.240 [56.90]	2.526 [64.16]	2.840 [72.14]
45/90	2.200 [55.88]	2.300 [58.42]	2.490 [63.25]	2.776 [70.51]	3.090 [78.59]
50/100	2.450 [62.23]	2.550 [64.77]	2.740 [69.60]	3.026 [76.86]	3.340 [84.84]
55/110	2.700 [68.58]	2.800 [71.12]	2.990 [75.95]	3.276 [83.21]	3.590 [91.19]
60/120	2.950 [74.93]	3.050 [77.47]	3.240 [82.30]	3.526 [82.30]	3.840 [97.54]
64/128	3.150 [80.01]	3.250 [82.55]	3.440 [87.38]	3.726 [94.64]	4.040 [102.62]
65/130	3.200 [81.28]	3.300 [83.82]	3.490 [88.65]	3.776 [95.91]	4.090 [103.89]
66/132	3.250 [82.55]	3.350 [85.09]	3.540 [89.92]	3.826 [97.18]	4.140 [105.16]
70/140	3.450 [87.63]	3.550 [90.17]	3.740 [95.00]	4.026 [102.26]	4.340 [110.24]
75/150	3.700 [93.98]	3.800 [96.52]	3.990 [101.35]	4.276 [108.61]	4.590 [116.59]
80/160	3.950 [100.33]	4.050 [102.87]	4.240 [107.70]	4.526 [114.96]	4.840 [122.94]
85/170	4.200 [106.68]	4.300 [109.22]	4.490 [114.05]	4.776 [121.31]	5.090 [129.29]
90/180	4.450 [113.03]	4.550 [115.57]	4.740 [120.40]	5.026 [127.66]	5.340 [135.64]
95/190	4.700 [119.38]	4.800 [121.92]	4.990 [126.75]	5.276 [134.01]	5.590 [141.99]
100/200	4.950 [125.73]	5.050 [128.27]	5.240 [133.10]	5.526 [140.36]	5.840 [148.34]
105/210	5.200 [132.08]	5.300 [134.62]	5.490 [139.45]	5.776 [146.71]	6.090 [154.69]
110/210	5.450 [138.43]	5.550 [140.97]	5.740 [145.80]	6.026 [153.06]	6.340 [161.04]

Dimensions are in inch [mm]

.050 [1.27] Contact Center

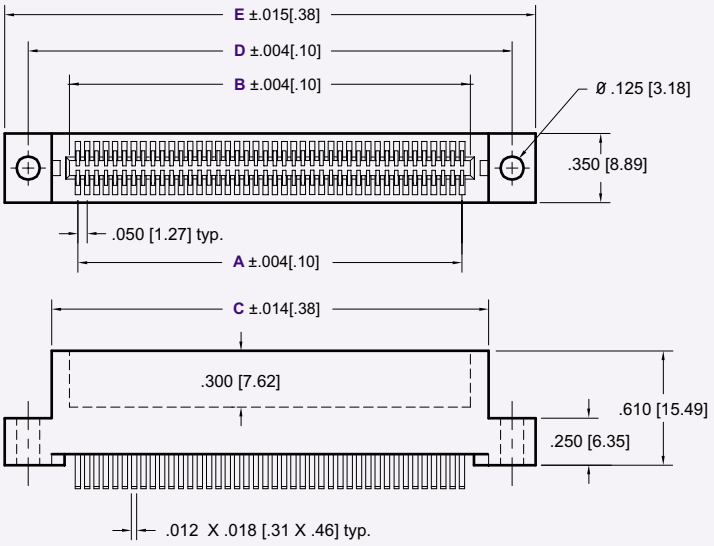

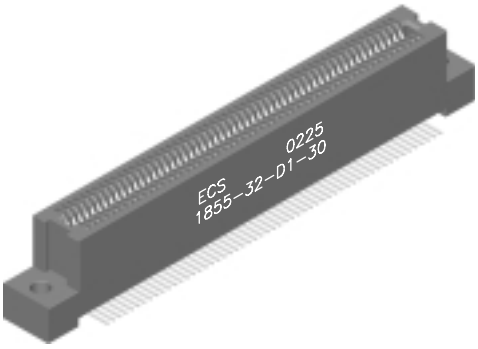

Dimensions are in inch [mm]

MOUNTING STYLE

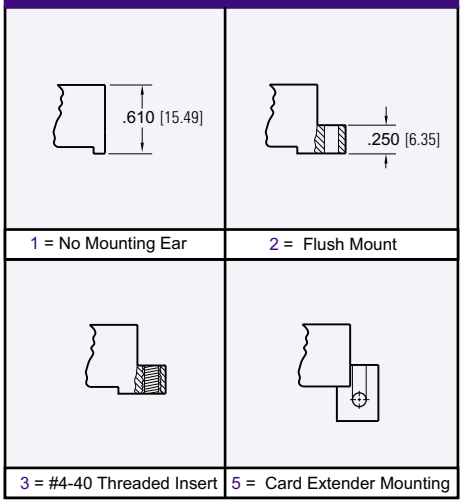

1 = No Mounting Ear	2 = Flush Mount
3 = #4-40 Threaded Insert	5 = Card Extender Mounting

TERMINATION TYPE

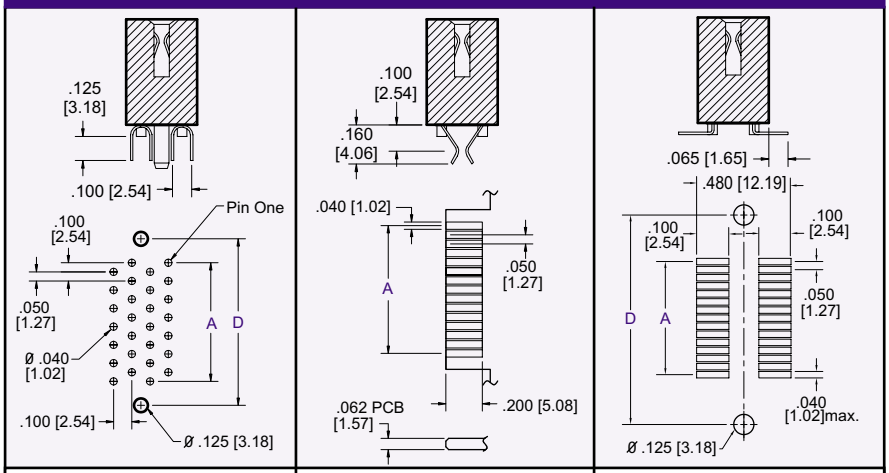

1 = Staggered Dip Solder	2 = Card Extender	3 = Surface Mount

PART NUMBERING

18 XX — X X — D X — XX — XXX

SERIES CODE
.050" Center SMT Card Edge Connectors

NO. CONTACT PAIRS
5 - 110

TERMINATION TYPE
1 = Staggered Dip Solder
2 = Card Extender
3 = Surface Mount

MOUNTING STYLE
1 = No Mounting
2 = Flush Mounting
3 = #4-40 Threaded Insert
5 = Card Extender Mounting Ear

MATERIALS
Insulator / Contact
1 = Ryton / Phosphor Bronze
2 = Ryton / Beryllium Copper
3 = Thermx / Phosphor Bronze
4 = Thermx / Beryllium Copper

PLATING
50µ" Nickel Underplate

CONTACT	TAIL
01 = Flash Au	100µ" Sn
10 = 10µ" Au	100µ" Sn
20 = 15µ" Au	100µ" Sn
30 = 30µ" Au	100µ" Sn

MODIFICATIONS
Consult Factory

CONSULT FACTORY FOR CONNECTORS BUILT TO YOUR SPECIFICATION

1800 Series Card Edge Connector
.050[1.27] Contact Centers, Right Angle Termination

Specifications

- Accommodates .062 ± .008 PC Board
- Ryton or Thermx insulator
- 1 amp current rating
- Insulation Resistance: 5000 M
- Dielectric Withstand Voltage: 250 VDC
- Voltage Drop: 30 m volt at rated current
- Contact Resistance: 30 m max. at rated current
- Board Insertion Force: 16 oz. Max. per contact pair using .062 [1.58mm] thick steel test blade
- Board Withdrawal Force: 1 oz. Min. per contact pair using .062 [1.58mm] thick steel test blade.
- Operating Temperature: -54° to 125° C

Recognized under the recognized component Program of Underwriters Laboratories, Inc. File Numbers: E146967 and E176234

For drawings, technical data or samples, contact E.C.S. at (714) 895-6351

POS./CONTACTS	A	B	C	D	E
5/10	.200 [5.08]	.300 [7.62]	.490 [12.45]	.776 [19.71]	1.090 [27.69]
10/20	.450 [11.43]	.550 [13.97]	.740 [18.80]	1.026 [26.06]	1.340 [34.04]
15/30	.700 [17.78]	.800 [20.32]	.990 [25.15]	1.276 [32.41]	1.590 [40.39
20/40	.950 [24.13]	1.050 [26.67]	1.240 [31.50]	1.526 [38.76]	1.840 [46.74]
25/50	1.200 [30.48]	1.300 [33.02]	1.490 [37.85]	1.776 [45.11]	2.090 [53.09]
30/60	1.450 [36.83]	1.550 [39.37]	1.740 [44.20]	2.026 [51.46]	2.340 [59.44]
35/70	1.700 [43.18]	1.800 [45.72]	1.990 [50.55]	2.276 [57.81]	2.590 [65.79]
40/80	1.950 [49.53]	2.050 [52.07]	2.240 [56.90]	2.526 [64.16]	2.840 [72.14]
45/90	2.200 [55.88]	2.300 [58.42]	2.490 [63.25]	2.776 [70.51]	3.090 [78.59]
50/100	2.450 [62.23]	2.550 [64.77]	2.740 [69.60]	3.026 [76.86]	3.340 [84.84]
55/110	2.700 [68.58]	2.800 [71.12]	2.990 [75.95]	3.276 [83.21]	3.590 [91.19]
60/120	2.950 [74.93]	3.050 [77.47]	3.240 [82.30]	3.526 [82.30]	3.840 [97.54]

Dimensions are in inch [mm]

MOUNTING STYLE

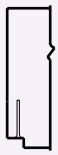

1 = NO MOUNTING EARS

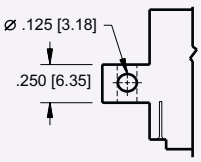

4 = SIDE MOUNTING

TERMINATION TYPE

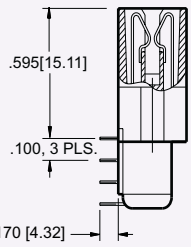

4 = RIGHT ANGLE

ELECTRONIC CONNECTOR SERVICE INC. 11880 WESTERN AVE. STANTON, CA 90680 TOLL FREE (877) ECS-CONN TEL (714) 895-6351 FAX (714) 894-1858
WWW.ECSCONN.COM

.050 [1.27] Contact Centers, Right Angle

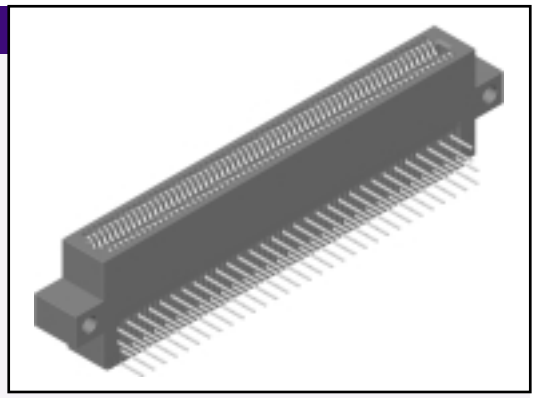

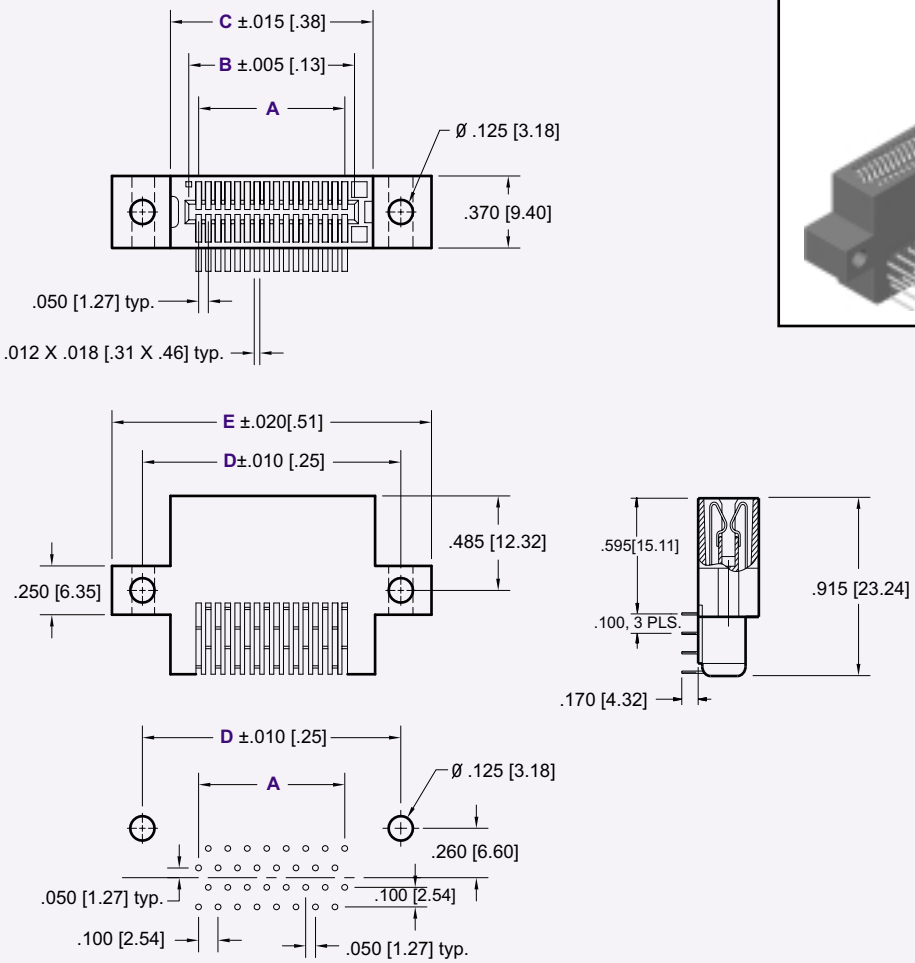

Dimensions are in inch [mm]

PART NUMBERING

18 XX — 4 X — D X — XX

SERIES CODE
.050" Center, Card Edge Right Angle

NO. CONTACT PAIRS
5 - 60

MOUNTING STYLE
1 = No Mounting
4 = Side Mounting

MATERIALS
Insulator / Contact
1 = Ryton / Phosphor Bronze
2 = Ryton / Beryllium Copper
3 = Thermx / Phosphor Bronze
4 = Thermx / Beryllium Copper

PLATING
50µ" Nickel Underplate

CONTACT	TAIL
01 = Flash Au	100µ" Sn
10 = 10µ" Au	100µ" Sn
20 = 15µ" Au	100µ" Sn
30 = 30µ" Au	100µ" Sn

1900 Series PCI Card Edge Connector
.050 [1.27] Contact Centers

Specifications

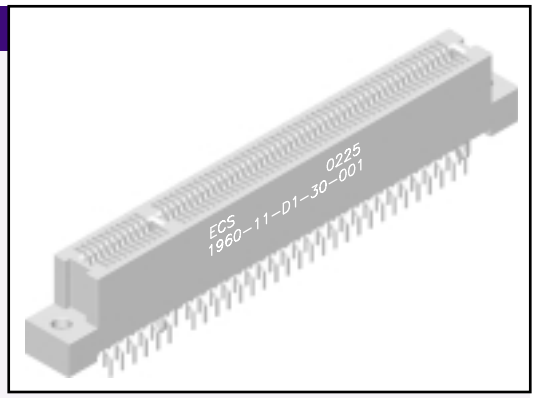

- Accommodates .062 ± .008 PC Board
- Ryton or Thermx insulator
- 1 amp current rating
- .150 grams normal force min.
- Insulation Resistance: 5000 M
- Dielectric Withstand Voltage: 250 V DC
- Voltage Drop: 30 m volt at rated current
- Contact Resistance: 30 m max. at rate current
- Board Insertion Force: 16 oz. max. per contact pair using .062 [1.58mm] thick steel test blade
- Board Withdrawal Force: 1 oz. min. per contact pair using .062 [1.58mm] thick steel test blade.
- Operating Temperature: -54° to 125° C

Recognized under the recognized component
Program of Underwriters Laboratories, Inc.
File Numbers: E146967 and E176234

For drawings, technical data or samples,
contact E.C.S. at (714) 895-6351

MOUNTING STYLE

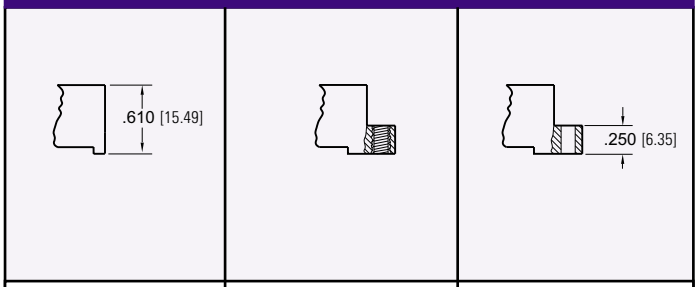

1 = No Mounting Ear	2 = #4-40 Threaded Insert	3 = Flush Mount

TERMINATION TYPE

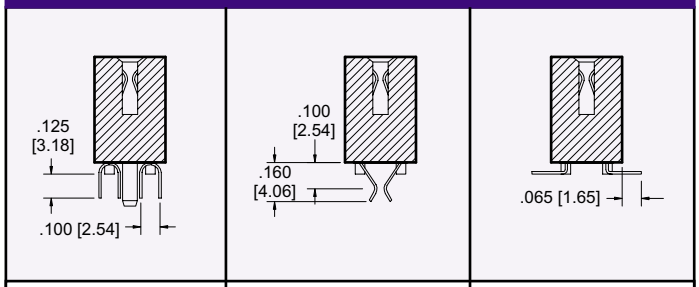

1 = Staggered Dip Solder	2 = Card Extender	3 = Surface Mount

PART NUMBERING

19 XX — X X — D X — XX — XXX

SERIES CODE
.050" Center PCI Card Edge Connectors

NO. CONTACT PAIRS
60 = 11/49 (32 bit, 3.3 or 5 volt)
92 = 11/49/32 (64 bit, 3.3 volt)
92 = 49/11/32 (64 bit, 5 volt)

TERMINATION TYPE
1 = Staggered Dip Solder
2 = Card Extender
3 = Surface Mount
4 = Right Angle (see page 11)

MOUNTING STYLE
1 = No Mounting
2 = Flush Mounting/Threaded Insert
3 = Flush Mounting
5 = Card Extender Mounting Ears

MATERIALS
Insulator / Contact
1 = Thermx / Phosphor Bronze
2 = Thermx / Beryllium Copper
3 = Ryton / Phosphor Bronze
4 = Ryton / Beryllium Copper

PLATING
50µ" Nickel Underplate

CONTACT	TAIL
01 = Flash Au	100µ" Sn
10 = 10µ" Au	100µ" Sn
20 = 15µ" Au	100µ" Sn
30 = 30µ" Au	100µ" Sn

MODIFICATIONS
001 = Card Slot Barriers With Guide Posts (32 bit)
002 = Card Slot Barriers Without Guide Posts (32 bit)
003 = Card Slot Barriers With Guide Posts (64 bit, 3.3 volt)
004 = Card Slot Barriers Without Guide Posts (64 bit, 3.3 volt)
005 = Card Slot Barriers With Guide Posts (64 bit, 5.0 volt)
006 = Card Slot Barriers Without Guide Posts (64 bit, 5.0 volt)

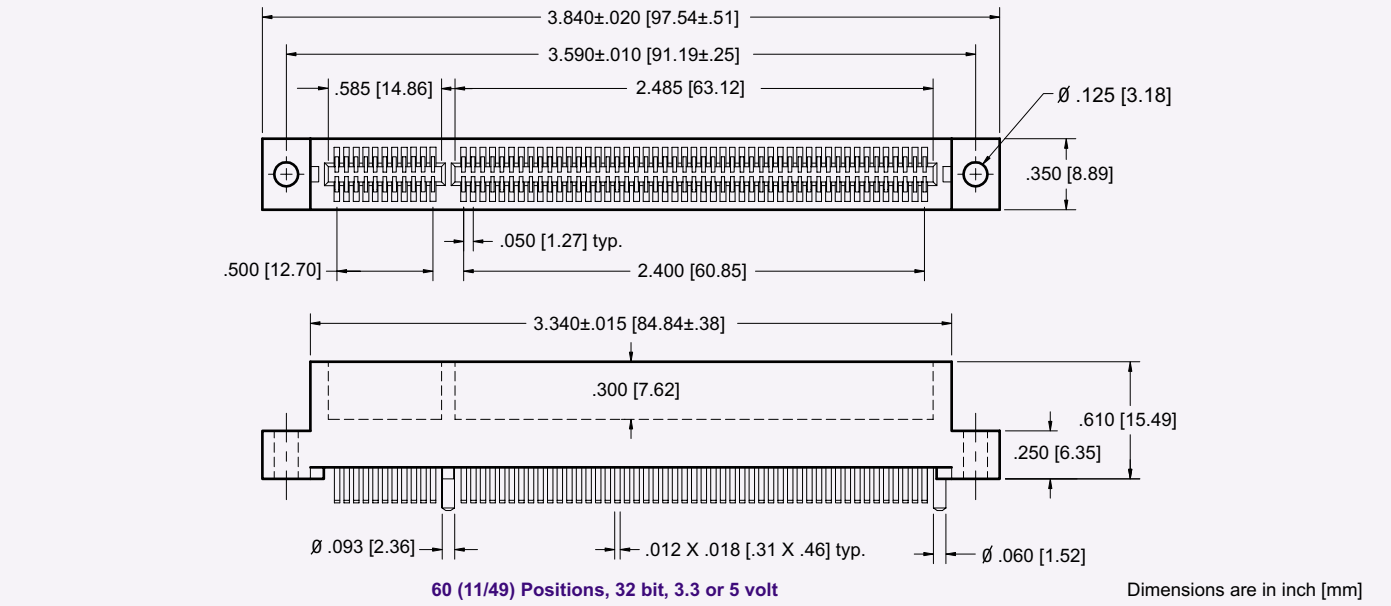

60 (11/49) Positions, 32 bit, 3.3 or 5 volt

Dimensions are in inch [mm]

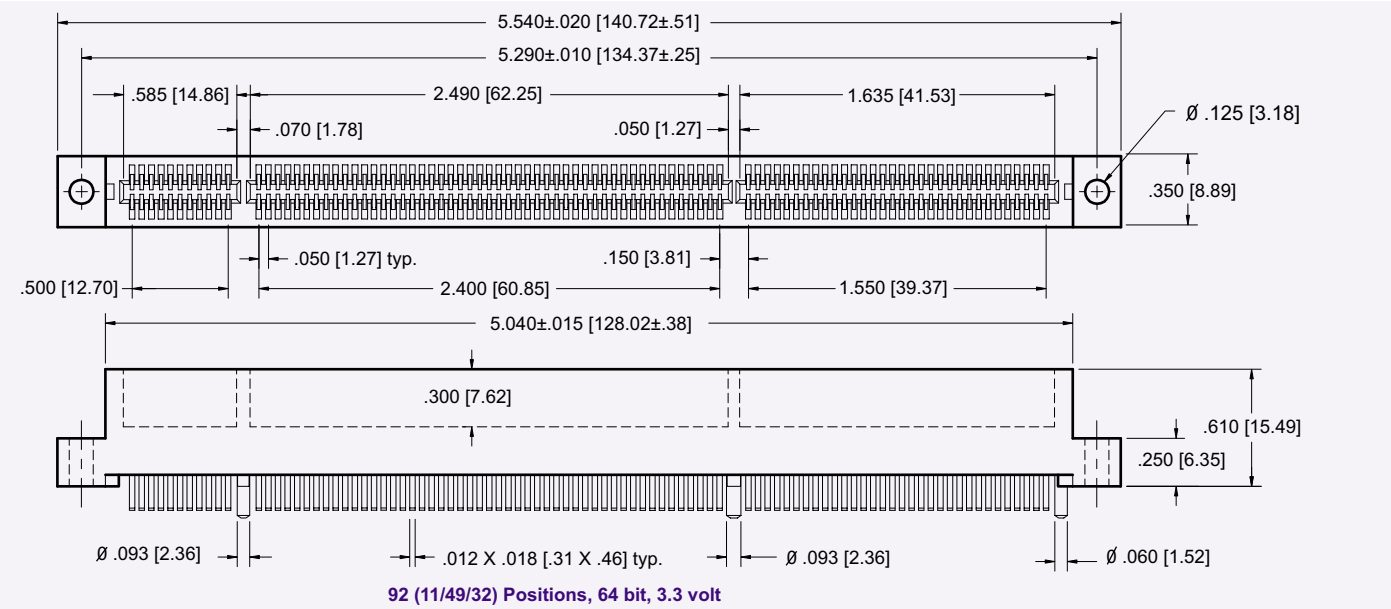

92 (11/49/32) Positions, 64 bit, 3.3 volt

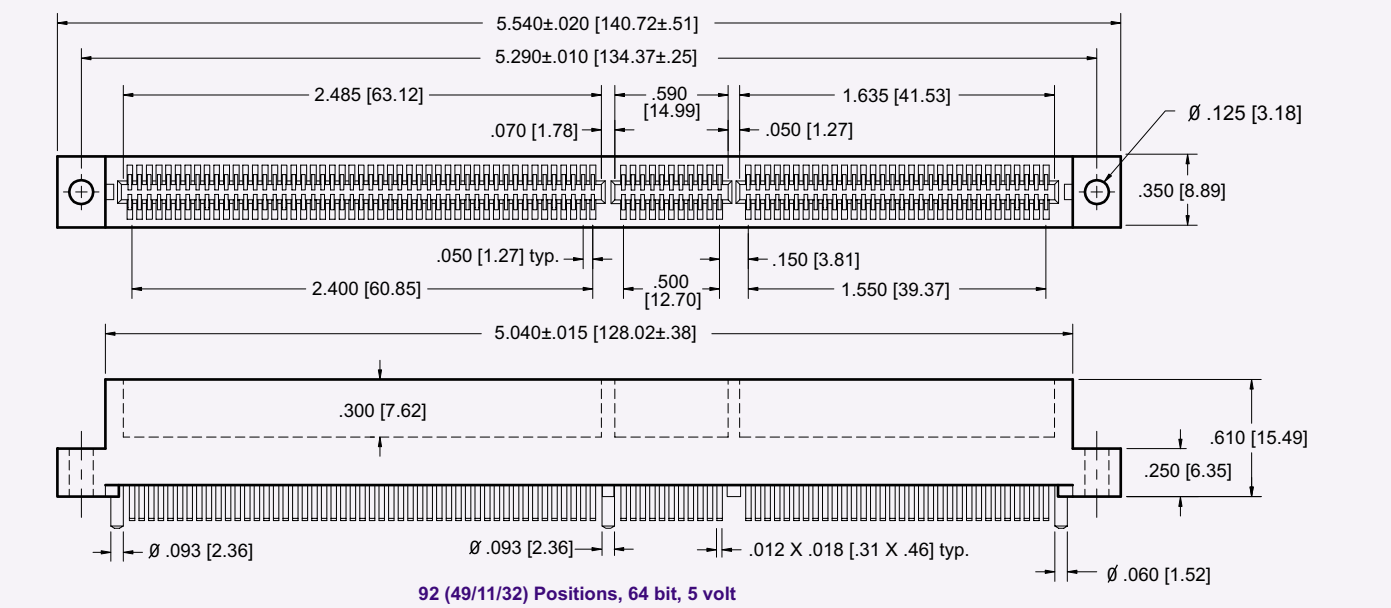

92 (49/11/32) Positions, 64 bit, 5 volt

CONSULT FACTORY FOR CONNECTORS BUILT TO YOUR SPECIFICATION

1900 Series PCI Card Edge Connector
.050[1.27] Contact Centers, Right Angle Termination

Specifications

- Accommodates .062 ± .008 PC Board
- Ryton or Thermx insulator
- 1 amp current rating
- .150 grams normal force minimum
- Insulation Resistance: 5000 Mega Ohm
- Dielectric Withstand Voltage: 250 VDC

File Numbers: E146967 and E176234

- Voltage Drop: 30 m volt at rated current
- Contact Resistance: 30 m Ω max. at rated current
- Board Insertion Force: 16 oz. Max. per contact pair using .062 [1.58mm] thick steel test blade
- Board Withdrawal Force: 1 oz. Min. per contact pair using .062 [1.58mm] thick steel test blade.
- Operating Temperature: -54° to 125° C

For drawings, technical data or samples, contact E.C.S. at (714) 895-6351

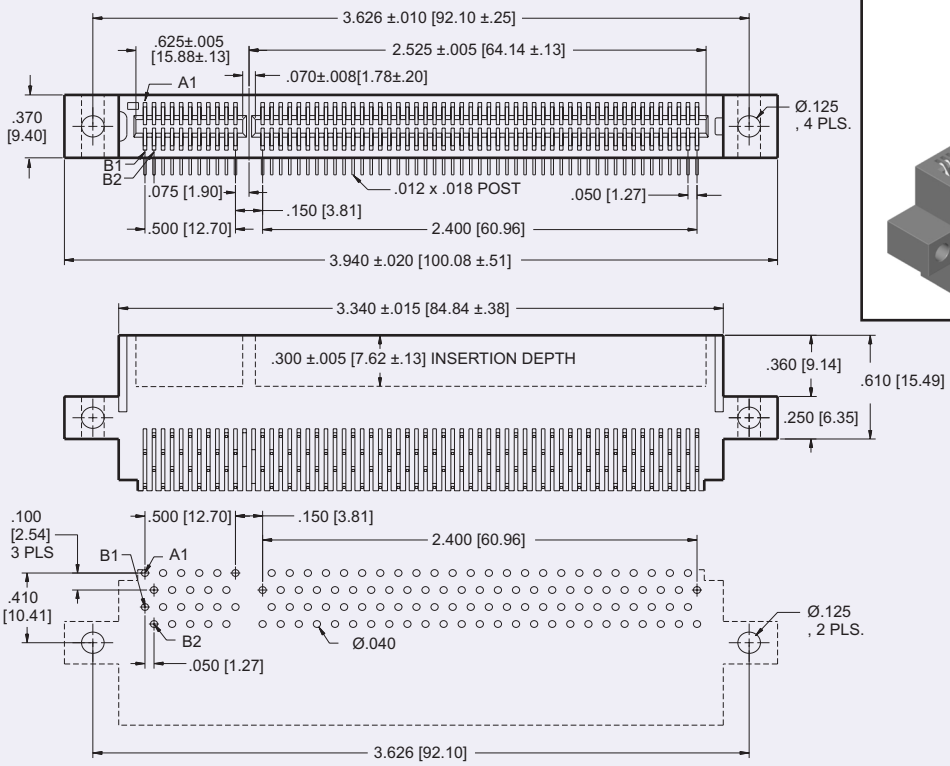

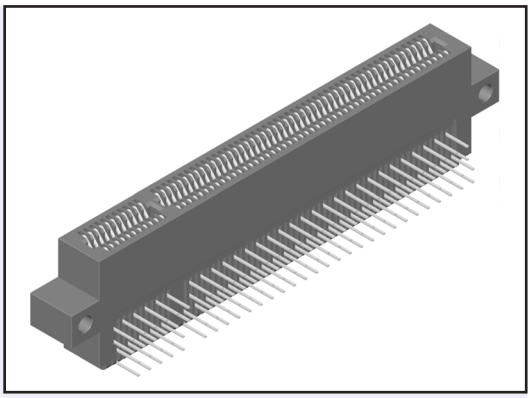

60 (11/49) Positions, 32 bit, 3.3 or 5 volt

PART NUMBERING

19 XX — 4 X — D X — XX — XXX

SERIES CODE
.050" Center PCI Card Edge Connector

NO. CONTACT PAIRS
60 = 11/49 (32 bit, 3.3 or 5 volt)
92 = 11/49/32 (64 bit, 3.3 volt)
92 = 11/49/32 (64 bit, 5 volt)

MOUNTING STYLE
1 = No Mounting
4 = Side Mounting

MATERIALS
Insulator / Contact
1 = Thermx / Phosphor Bronze
2 = Thermx / Beryllium Copper
3 = Ryton / Phosphor Bronze
4 = Ryton / Beryllium Copper

PLATING
50µ" Nickel Underplate

CONTACT	TAIL
01 = Flash Au	100µ" Sn
10 = 10µ" Au	100µ" Sn
20 = 15µ" Au	100µ" Sn
30 = 30µ" Au	100µ" Sn

MODIFICATIONS
001 = Card Slot Barriers With Guide Posts (32 bit)
002 = Card Slot Barriers Without Guide Posts (32 bit)
003 = Card Slot Barriers With Guide Posts (64 bit, 3.3 volt)
004 = Card Slot Barriers Without Guide Posts (64 bit, 3.3 volt)
005 = Card Slot Barriers With Guide Posts (64 bit, 5.0 volt)
006 = Card Slot Barriers Without Guide Posts (64 bit, 5.0 volt)

.050 [1.27] Contact Centers, Right Angle Termination

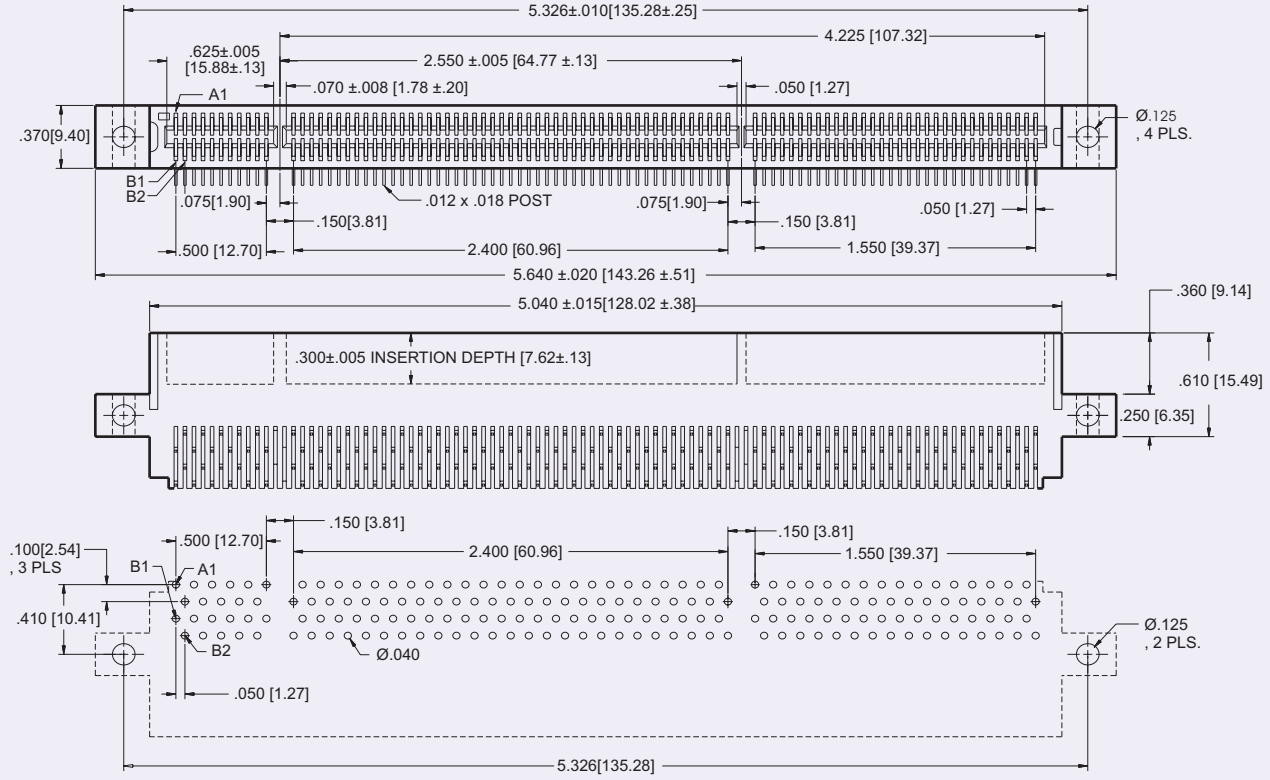

92 (11/49/32) Positions, 64 bit, 3.3 volt

Dimensions are in inches [mm]

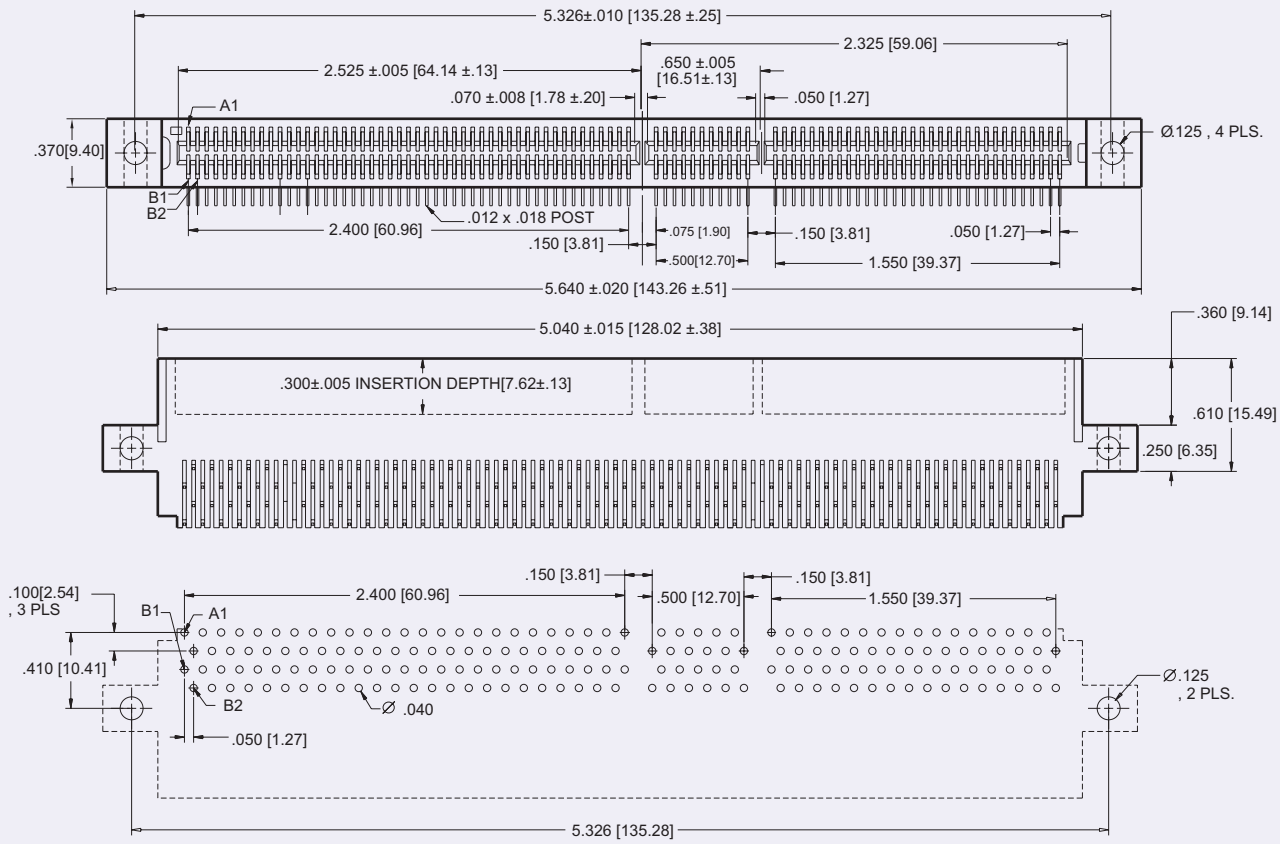

92 (49/11/32) Positions, 64 bit, 5 volt

1100 Series Card Edge Connector
.100” X .200” Contact Spacing

Specifications

Insulator Material: Glass filled polyester, type PBT, 94 V-O, UL Rated.
Contact Material: Phosphor Bronze Alloy
Contact Plating: Gold and/or Tin over .000050” Nickel, (See Contact Plating Options).
Current Rating: 3 amp at 30°C
Contact Resistance:
Contact to Daughter Card:
10 m max.
Insulation Resistance:
5000 M min.
Dielectric Withstand Voltage:
1000 V AC
Daughter Board Insertion Force:
16 oz max. per contact pair when tested with a .071” thick gage.
Daughter Board Withdrawal Force:
1 oz min. per contact pair when tested with a .054” thick gage.
Operating Temperature:
-54°C to +125°C

Features

- Extra large chamfered entry
- Conforms to Bell-core spec TR-TSY-00078
- Extended card scoops available
- Replaceable contacts
- Molded in polarization available between contact, or on contact position.
- De-population of contacts per customer specification.
- Available in selective gold plate at contact point
- Many other custom options available, including, but not limited to:
  - Single or Both Ends Open
  - Shorting Contacts

Recognized under the recognized component Program of Underwriters Laboratories, Inc.
File Numbers: E146967 and E176234

For drawings, technical data or samples, contact E.C.S. at (714) 895-6351

POS. / CONTACTS	A	B	C
05/10	0.756 [19.20]	0.600 [15.24]	0.400 [10.16]
10/20	1.256 [31.90]	1.100 [27.94]	0.900 [22.86]
12/24	1.456 [36.98]	1.300 [33.02]	1.100 [27.94]
15/30	1.756 [44.60]	1.600 [40.64]	1.400 [35.56]
18/36	2.056 [52.22]	1.900 [48.26]	1.700 [43.18]
20/40	2.256 [57.30]	2.100 [53.34]	1.900 [48.26]
22/44	2.456 [62.38]	2.300 [58.42]	2.100 [53.34]
25/50	2.756 [70.00]	2.600 [66.04]	2.400 [60.96]
28/56	3.056 [76.62]	2.900 [73.66]	2.700 [68.58]
30/60	3.256 [82.70]	3.100 [78.74]	2.900 [73.66]
31/62	3.356 [85.24]	3.200 [81.28]	3.000 [76.20]
35/70	3.756 [95.40]	3.600 [91.44]	3.400 [86.36]
36/72	3.856 [97.94]	3.700 [93.98]	3.500 [88.90]
40/80	4.256 [108.10]	4.100 [104.14]	3.900 [99.06]
43/86	4.556 [115.72]	4.400 [111.76]	4.200 [106.68]
50/100	5.256 [133.50]	5.100 [129.54]	4.900 [124.46]
55/110	5.756 [146.20]	5.600 [142.24]	5.400 [137.16]
60/120	6.256 [158.90]	6.100 [154.94]	5.900 [149.86]
65/130	6.756 [171.60]	6.600 [167.64]	6.400 [162.56]
70/140	7.256 [184.30]	7.100 [180.34]	6.900 [175.26]

For reference only, can go 1 through 70 positions.

Dimensions are in inch [mm]

MOUNTING STYLE

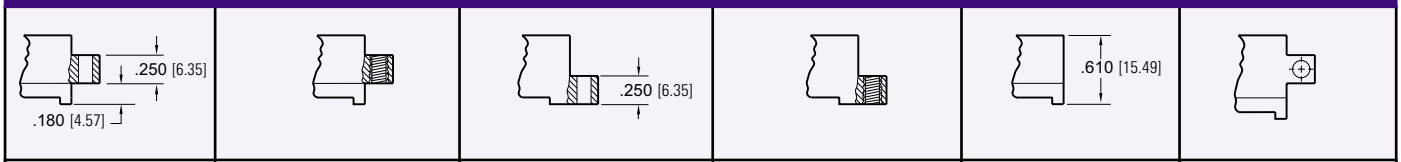

1 = Clearance Hole	2 = #4-40 Threaded Insert	3 = Flush Mount	4 = #4-40 Threaded Insert	5 = No Mounting Ear	6 = Side Mounting

ELECTRONIC CONNECTOR SERVICE INC. 11880 WESTERN AVE. STANTON, CA 90680 TOLL FREE (877) ECS-CONN TEL (714) 895-6351 FAX (714) 894-1858
WWW.ECSCONN.COM

.100” x .200” Contact Spacing

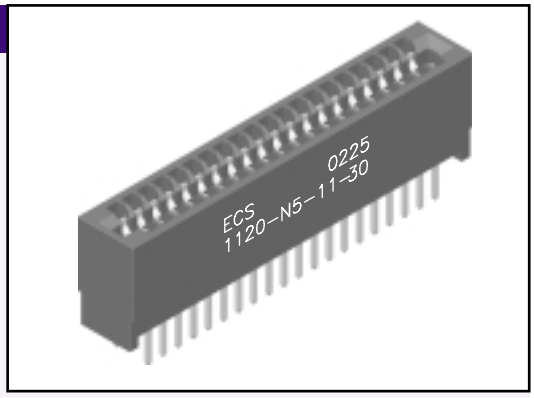

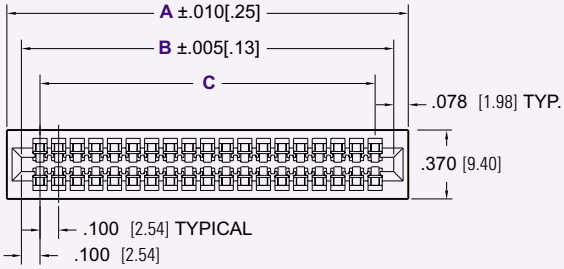

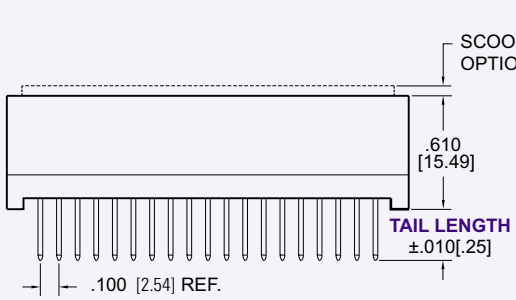

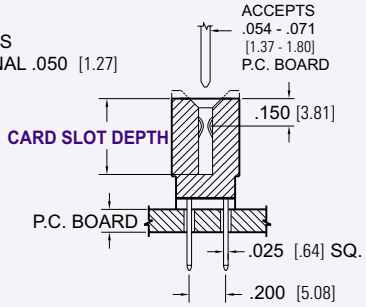

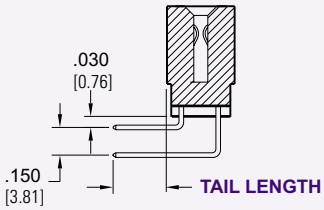

RIGHT ANGLE
DIP SOLDER

Dimensions are in inch [mm]

PART NUMBERING

11 XX — X X — X X — XX — XXX

SERIES CODE
.100 x .200 Contact Spacing, Card Edge

NO. CONTACT PAIRS
01 - 70

SCOOPS
S = With
N = Without

MOUNTING STYLE
1 = Clearance Hole
2 = #4-40 Threaded Insert
3 = Flush Mount
4 = Flush Mount / #4-40 Threaded Insert
5 = No Mounting Ear
6 = Side Mounting

CARD SLOT DEPTH
1 = .415 [10.54]
2 = .350 [8.89]
3 = .300 [7.62]

TAIL LENGTH
1 = .190 [4.83]
2 = .315 [8.00]
3 = .405 [10.29]
4 = .565 [14.35]
5 = .650 [16.51]
6 = .100 [2.54] Right Angle
7 = .180 [4.57] Right Angle
8 = .250 [6.35] Right Angle

PLATING
50µ” Nickel Underplate

CONTACT	TAIL
10 = 10µ” Au	100µ” Sn
20 = 15µ” Au	100µ” Sn
30 = 30µ” Au	100µ” Sn
40 = 10µ” Au	5µ” Au
50 = 15µ” Au	5µ” Au
60 = 30µ” Au	5µ” Au

CUSTOM VARIATION
CONSULT FACTORY

CONSULT FACTORY FOR CONNECTORS BUILT TO YOUR SPECIFICATION

1100 Series Card Edge Connector
.100” X .200” Contact Spacing, ISA Bus

Specifications

Insulator Material: Glass filled polyester, type PBT, 94 V-O, UL Rated.
Contact Material: Phosphor Bronze Alloy
Contact Plating: Gold and/or Tin over .000050” Nickel, (See Contact Plating Options).
Current Rating: 3 amp at 30°C
Contact Resistance:
Contact to Daughter Card:
10 m max.
Insulation Resistance:
5000 M min.
Dielectric Withstand Voltage:
1000 V AC
Daughter Board Insertion Force:
16 oz max. per contact pair when tested with a .071” thick gage.
Daughter Board Withdrawal Force:
1 oz min. per contact pair when tested with a .054” thick gage.
Operating Temperature:
-54°C to +125°C

Features

- Extra large chamfered entry
- Conforms to Bell-core spec TR-TSY-00078
- Extended card scoops available
- Replaceable contacts
- Molded in polarization available between contact, or on contact position.
- De-population of contacts per customer specification.
- Available in selective gold plate at contact point
- Many other custom options available, including, but not limited to:
  - Single or Both Ends Open
  - Shorting Contacts

Recognized under the recognized component Program of Underwriters Laboratories, Inc.
File Numbers: E146967 and E176234

For drawings, technical data or samples, contact E.C.S. at (714) 895-6351

READ OUT

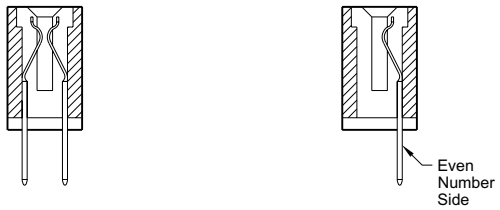

D = Dual Load **H** = Half Load

KEY IN BETWEEN CONTACTS (ORDER SEPARATELY)

P/N 11-PK1

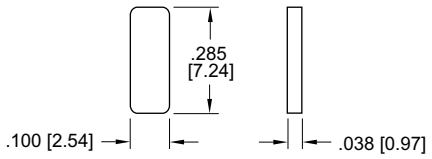

CONSULT FACTORY FOR MOLDED IN KEY

TERMINATION TYPE

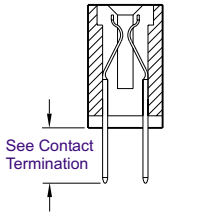

1 = STRAIGHT

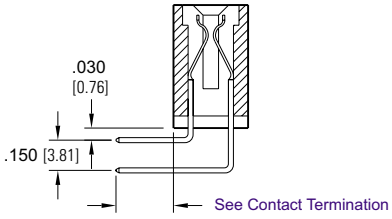

2 = RIGHT ANGLE

MOUNTING STYLE

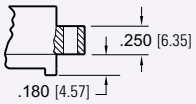

1 = Clearance Hole

2 = #4-40 Threaded Insert

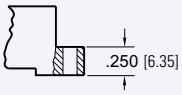

3 = Flush Mount

4 = #4-40 Threaded Insert

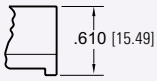

5 = No Mounting Ear

6 = Side Mounting

ELECTRONIC CONNECTOR SERVICE INC. 11880 WESTERN AVE. STANTON, CA 90680 TOLL FREE (877) ECS-CONN TEL (714) 895-6351 FAX (714) 894-1858
WWW.ECSCONN.COM

.100” x .200” Contact Spacing, ISA Card Edge

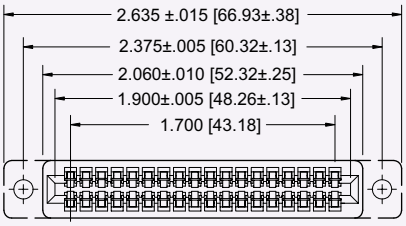

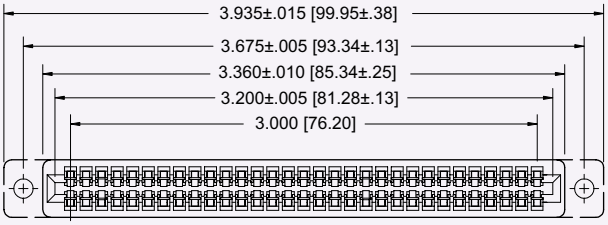

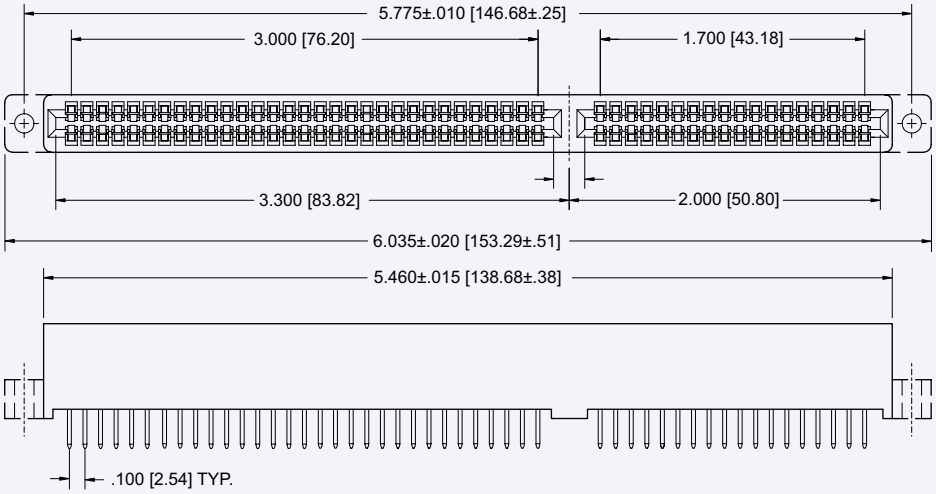

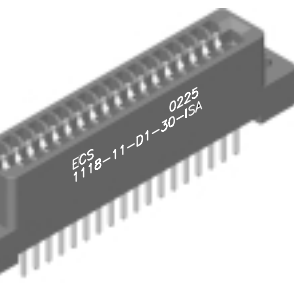

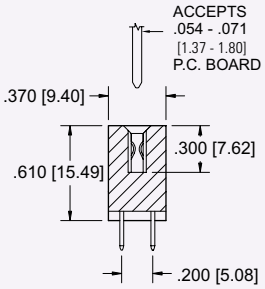

Dimensions are in inch [mm]

PART NUMBERING

11 XX — X X — X X — XX — ISA

SERIES CODE
.100” x .200” Centers Card Edge ISA Bus

NO. CONTACT PAIRS
18
31
49 (18,31)

TERMINATION TYPE
1 = Straight
2 = Right Angle

MOUNTING STYLE
1 = Clearance Hole
2 = #4-40 Threaded Insert
3 = Flush Mount
4 = Flush Mount / #4-40 Threaded Insert
5 = No Mounting Ear
6 = Side Mounting

CONTACT TERMINATION
1 = .190 [4.83] Dip Solder
2 = .100 [2.54] Dip Solder
3 = .560 [14.22] Wire Wrap
4 = .100 [2.54] Right Angle
5 = .180 [4.57] Right Angle

READ OUT
D = Dual Load
H = Half Load

PLATING
50µ” Nickel Underplate

CONTACT	TAIL
10 = 10µ” Au	100µ” Sn
20 = 15µ” Au	100µ” Sn
30 = 30µ” Au	100µ” Sn

CONSULT FACTORY FOR CONNECTORS BUILT TO YOUR SPECIFICATION

1200 Series Card Edge Connector
.100” X .200” Contact Spacing, Bellow Contacts

Specifications

Insulator Material: Glass filled polyester, type PBT, 94 V-O, UL Rated.
Contact Material: Phosphor Bronze Alloy
Contact Plating: Gold and/or Tin over .000050” Nickel, (See Contact Plating Options).
Current Rating: 3 amp at 30°C
Contact Resistance:
Contact to Daughter Card:
10 m max.
Insulation Resistance:
5000 M min.
Dielectric Withstand Voltage:
1000 V AC
Daughter Board Insertion Force:
16 oz max. per contact pair when tested with a .071” thick gage.
Daughter Board Withdrawal Force:
1 oz min. per contact pair when tested with a .054” thick gage.
Operating Temperature:
-54°C to +125°C

Features

- Extra large chamfered entry
- Conforms to Bell-core spec TR-TSY-00078
- Extended card scoops available
- Replaceable contacts
- Molded in polarization available between contact, or on contact position.
- De-population of contacts per customer specification.
- Available in selective gold plate at contact point
- Many other custom options available, including, but not limited to:
  - Single or Both Ends Open

Recognized under the recognized component Program of Underwriters Laboratories, Inc.
File Numbers: E146967 and E176234

For drawings, technical data or samples, contact E.C.S. at (714) 895-6351

POS./CONTACTS	A	B	C	D	E	F
08/16	0.700 [17.78]	0.900 [22.86]	1.060 [26.92]	1.375 [34.93]	1.635 [41.53]	0.950 [24.13]
10/20	0.900 [22.86]	1.100 [27.94]	1.260 [32.00]	1.575 [40.00]	1.835 [46.61]	1.150 [29.21]
12/24	1.100 [27.94]	1.300 [33.02]	1.460 [37.08]	1.775 [45.08]	2.035 [51.69]	1.350 [34.29]
15/30	1.400 [35.56]	1.600 [40.64]	1.760 [44.70]	2.075 [52.70]	2.335 [59.31]	1.650 [41.91]
17/34	1.600 [40.64]	1.800 [45.72]	1.960 [49.78]	2.275 [57.79]	2.535 [64.39]	1.850 [46.99]
18/36	1.700 [43.18]	1.900 [48.26]	2.060 [52.32]	2.375 [60.32]	2.635 [66.93]	1.950 [49.53]
20/40	1.900 [48.26]	2.100 [53.34]	2.260 [57.40]	2.575 [65.40]	2.835 [72.01]	2.150 [54.61]
22/44	2.100 [53.34]	2.300 [58.42]	2.460 [62.48]	2.775 [70.48]	3.035 [77.09]	2.350 [59.69]
25/50	2.400 [60.96]	2.600 [66.04]	2.760 [70.10]	3.075 [78.10]	3.335 [84.71]	2.650 [67.31]
28/56	2.700 [68.58]	2.900 [73.66]	3.060 [77.72]	3.375 [85.72]	3.635 [92.33]	2.950 [74.93]
30/60	2.900 [73.66]	3.100 [78.74]	3.260 [82.80]	3.575 [90.80]	3.835 [97.41]	3.150 [80.01]
31/62	3.000 [76.20]	3.200 [81.28]	3.360 [85.34]	3.675 [93.34]	3.935 [99.95]	3.250 [82.55]
35/70	3.400 [86.36]	3.600 [91.44]	3.760 [95.50]	4.075 [103.50]	4.335 [110.11]	3.650 [92.71]
36/72	3.500 [88.90]	3.700 [93.98]	3.860 [98.04]	4.175 [106.04]	4.435 [112.65]	3.750 [95.25]
40/80	3.900 [99.09]	4.100 [104.14]	4.260 [108.20]	4.575 [116.20]	4.835 [122.81]	4.150 [105.41]
43/86	4.200 [106.68]	4.400 [111.76]	4.560 [115.82]	4.875 [123.82]	5.135 [130.43]	4.450 [113.03]
44/88	4.300 [109.22]	4.500 [114.30]	4.660 [118.36]	4.975 [126.36]	5.235 [132.97]	4.550 [115.57]
49/98	4.800 [121.92]	5.000 [127.00]	5.160 [131.06]	5.475 [139.06]	5.735 [145.67]	5.050 [128.27]
50/100	4.900 [124.46]	5.100 [129.54]	5.260 [133.60]	5.575 [141.60]	5.835 [148.21]	5.150 [130.81]
55/100	5.400 [137.16]	5.600 [142.24]	5.760 [146.30]	6.075 [154.30]	6.335 [160.91]	5.650 [143.51]
60/120	5.900 [175.26]	6.100 [154.94]	6.260 [159.00]	6.575 [167.00]	6.835 [173.61]	6.150 [156.21]
61/122	6.000 [152.40]	6.200 [157.48]	6.360 [161.54]	6.675 [169.55]	6.935 [176.15]	6.250 [158.75]
65/130	6.400 [162.56]	6.600 [167.64]	6.760 [171.70]	7.075 [179.70]	7.335 [186.31]	6.650 [168.91]
70/140	6.900 [175.26]	7.100 [180.34]	7.260 [184.40]	7.575 [192.40]	7.835 [199.01]	7.150 [181.61]

Dimensions are in inch [mm]

MOUNTING STYLE

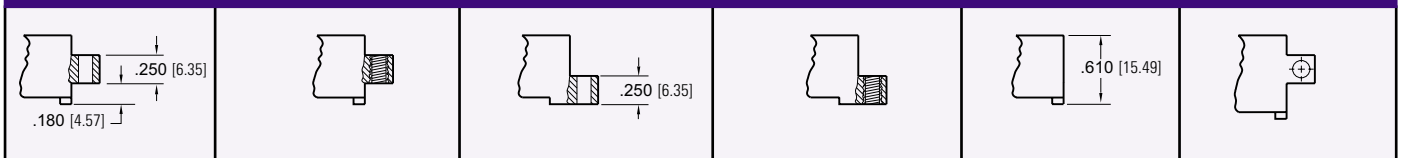

1 = Clearance Hole	2 = #4-40 Threaded Insert	3 = Flush Mount	4 = #4-40 Threaded Insert	5 = No Mounting Ear	6 = Side Mounting

.100” x .200” Contact Spacing, Bellow Contacts

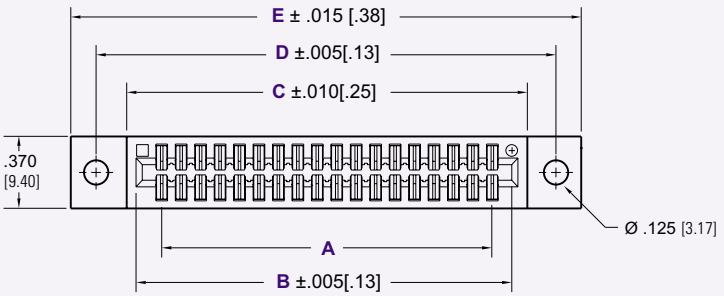

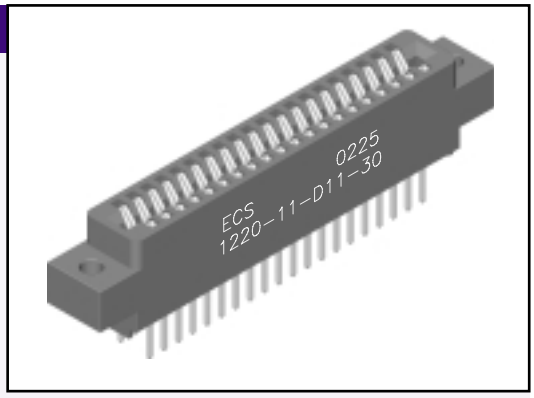

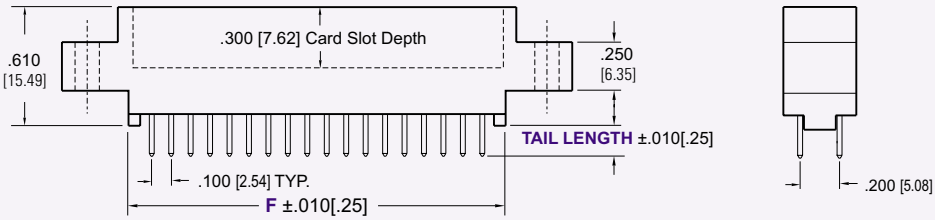

Dimensions are in inch [mm]

TERMINATION TYPE

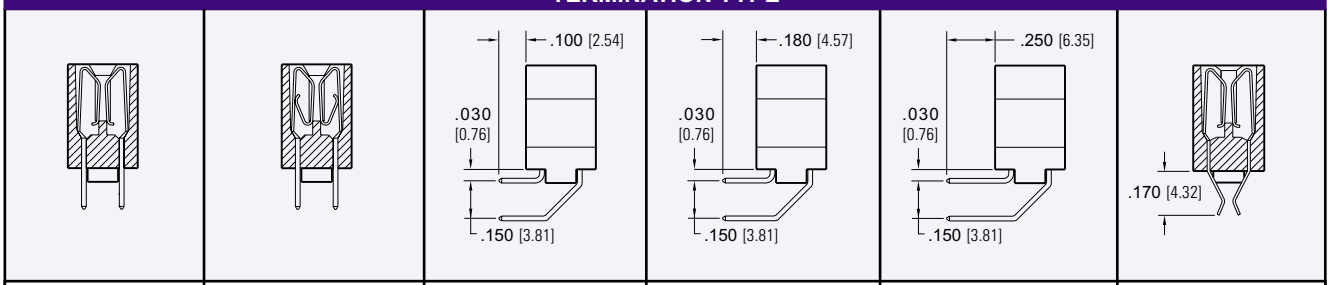

1 =Hair Pin Bellows	2 = Loop Bellows	3 = Right Angle (.100” Tail)	3 = Right Angle (.180” Tail)	3 = Right Angle (.250” Tail)	Card Extender

PART NUMBERING

12 XX — X X — X X X — XX — XXX

SERIES CODE
.100” X .200” Dip Solder / Wire Wrap

NO. CONTACT PAIRS
01 - 70

TERMINATION TYPE
1 = Hairpin Bellows
2 = Loop Bellows
3 = Right Angle Bellows

MOUNTING STYLE
1 = Clearance Hole
2 = #4-40 Threaded Insert
3 = Flush Mount
4 = Flush Mount / #4-40 Insert
5 = No Mounting Ear
6 = Side Mounting

READOUT
D = Dual
H = Half Loaded

PIN STYLE
1 = .025 SQ.
2 = .026 DIA.

TAIL LENGTH
1 = .190 [4.83] Dip Solder
2 = .560 [14.22] Wire Wrap
3 = .100 [2.54] Right Angle
4 = .180 [4.57] Right Angle
5 = .250 [6.35] Right Angle
6 = .170 [4.32] Card Extender

PLATING
50µ” Nickel Underplate

CONTACT	TAIL
10 = 10µ” Au	100µ” Sn
20 = 15µ” Au	100µ” Sn
30 = 30µ” Au	100µ” Sn
40 = 10µ” Au	5µ” Au
50 = 15µ” Au	5µ” Au
60 = 30µ” Au	5µ” Au

CUSTOM VARIATION
CONSULT FACTORY

CONSULT FACTORY FOR CONNECTORS BUILT TO YOUR SPECIFICATION

1300 Series Low Profile Card Edge Connector
.100[2.54] Contact Centers

Specifications

Insulator Material: Glass filled polyester, type PBT, 94 V-O, UL Rated.
Contact Material: Phosphor Bronze Alloy
Contact Plating: Gold and/or Tin over .000050" Nickel, (See Contact Plating Options).
Current Rating: 3 amp at 30°C
Contact Resistance: Contact to Daughter Card: 10 m
Insulation Resistance: 5000 M
Dielectric Withstand Voltage: 1000 V AC
Daughter Board Insertion Force: 16 oz max. per contact pair when tested with a .071" thick gage.

Daughter Board Withdrawal Force: 1 oz min. per contact pair when tested with a .054" thick gage.

Recognized under the recognized component Program of Underwriters Laboratories, Inc. File Numbers: E146967 and E176234

For drawings, technical data or samples, contact E.C.S. at (714) 895-6351

CONTACTS	A	B	C	D	E	F
4/8 5/10 6/12	.300 [7.62] .400 [10.16] .500 [12.70]	.500 [12.70] .600 [15.24] .700 [17.78]	.675 [17.15] .775 [19.69] .875 [22.23]	.975 [24.77] 1.075 [27.31] 1.175 [29.85]	1.275 [32.39] 1.375 [34.93] 1.475 [37.47]	.330 [8.38]
7/14 8/16 10/20	.600 [15.24] .700 [17.78] .900 [22.86]	.800 [20.32] .900 [22.86] 1.100 [27.94]	.975 [24.77] 1.075 [27.31] 1.275 [32.39]	1.275 [32.39] 1.375 [34.93] 1.575 [40.01]	1.575 [40.01] 1.675 [42.55] 1.875 [47.63]	
12/24 13/26 15/30	1.100 [27.94] 1.200 [30.48] 1.400 [35.56]	1.300 [33.02] 1.400 [35.56] 1.600 [40.64]	1.475 [37.47] 1.575 [40.01] 1.775 [45.09]	1.775 [45.09] 1.875 [47.63] 2.075 [52.71]	2.075 [52.71] 2.175 [55.25] 2.375 [60.33]	
18/36 19/38 20/40	1.700 [43.18] 1.800 [45.72] 1.900 [48.26]	1.900 [48.26] 2.000 [50.80] 2.100 [53.34]	2.075 [52.71] 2.175 [55.25] 2.275 [57.79]	2.375 [60.33] 2.475 [62.87] 2.575 [65.41]	2.675 [67.95] 2.775 [70.49] 2.875 [73.03]	
22/44 23/46 25/50	2.100 [53.34] 2.200 [55.88] 2.400 [60.96]	2.300 [58.42] 2.400 [60.96] 2.600 [66.04]	2.475 [62.87] 2.575 [65.41] 2.775 [70.49]	2.775 [70.49] 2.875 [73.03] 3.075 [78.11]	3.075 [78.11] 3.175 [80.65] 3.375 [85.73]	
26/52 28/56 30/60	2.500 [63.50] 2.700 [68.58] 2.900 [73.66]	2.700 [68.58] 2.900 [73.66] 3.100 [78.74]	2.875 [73.03] 3.075 [78.11] 3.275 [83.19]	3.175 [80.65] 3.375 [85.73] 3.575 [90.81]	3.475 [88.27] 3.675 [93.35] 3.875 [98.43]	
31/62 35/70 36/72	3.000 [76.20] 3.400 [86.36] 3.500 [88.90]	3.200 [81.28] 3.600 [91.44] 3.700 [93.98]	3.375 [85.73] 3.775 [95.89] 3.875 [98.43]	3.675 [93.35] 4.075 [103.51] 4.175 [106.05]	3.975 [100.97] 4.375 [111.13] 4.475 [113.67]	.400 [10.16]
40/80 43/86 44/88	3.900 [99.06] 4.200 [106.68] 4.300 [109.22]	4.100 [104.14] 4.400 [111.76] 4.500 [114.30]	4.275 [108.59] 4.575 [116.21] 4.675 [118.75]	4.575 [116.21] 4.875 [123.83] 4.975 [126.37]	4.875 [123.83] 5.175 [131.45] 5.275 [133.99]	
49/98 50/100 60/120	4.800 [121.92] 4.900 [124.46] 5.900 [149.86]	5.000 [127.00] 5.100 [129.54] 6.100 [154.94]	5.175 [131.45] 5.275 [133.99] 6.275 [159.39]	5.475 [139.07] 5.575 [141.61] 6.575 [167.01]	5.775 [146.69] 5.875 [149.23] 6.875 [174.63]	

Dimensions are in inch [mm]

POLARIZING KEYS

P/N 13-PK2 KEY IN BETWEEN CONTACTS (ORDER SEPARATELY)

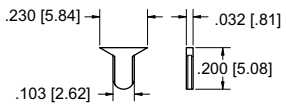

CONSULT FACTORY FOR MOLDED IN KEY

KEY REPLACES ONE PAIR OF CONTACTS (ORDER SEPARATELY)

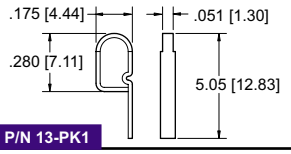

P/N 13-PK1

.100[2.54] Contact Centers, Low Profile Card Edge

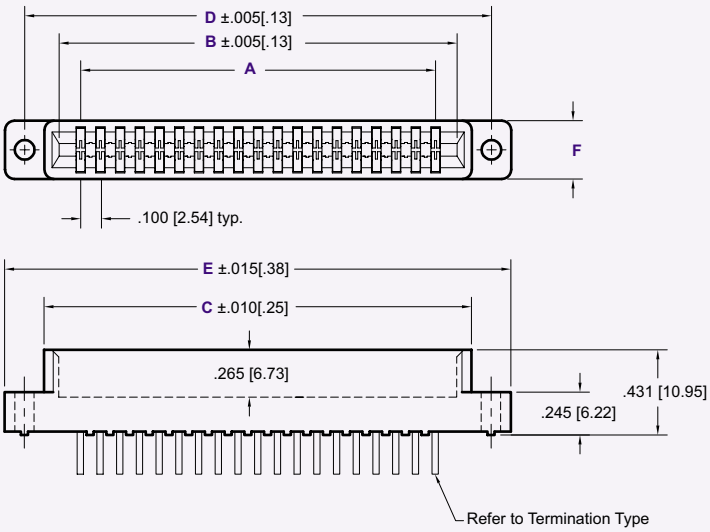

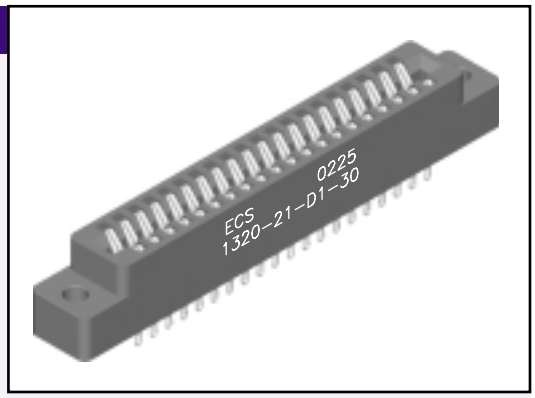

Dimensions are in inch [mm]

TERMINATION TYPE

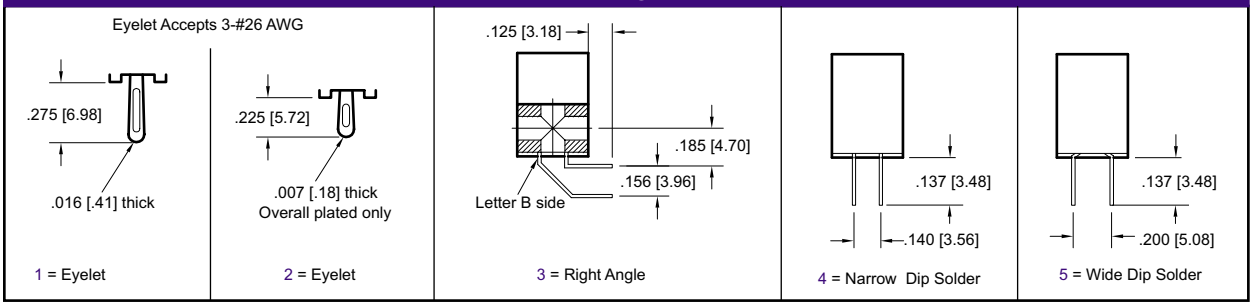

MOUNTING STYLE

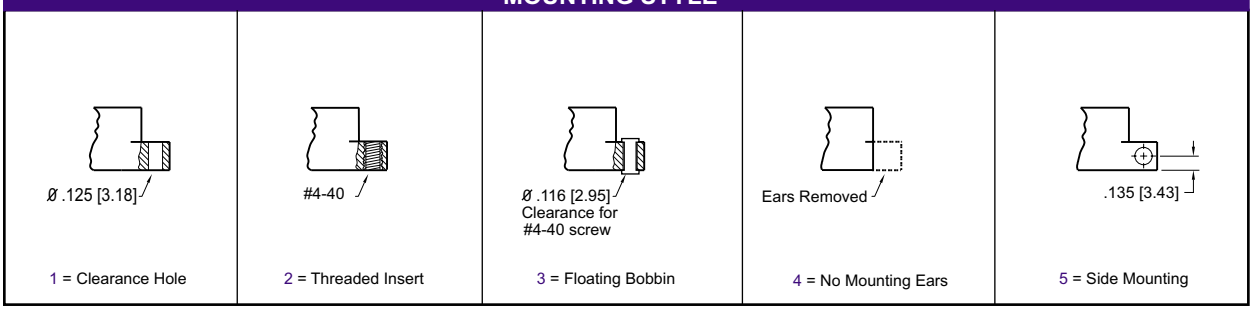

PART NUMBERING

13 XX — X X — D X — XX — XXX

SERIES CODE
.100" X .200" Low Profile

NO. CONTACT PAIRS
01 - 60

TERMINATION TYPE
1 = Eyelet (.016 [.41] thick)
2 = Eyelet (.007 [.18] thick)
3 = Right Angle
4 = Narrow Dip Solder
5 = Wide Dip Solder

MOUNTING STYLE
1 = Clearance Hole
2 = Threaded Insert
3 = Floating Bobbin
4 = No Mounting Ear
5 = Side Mounting

MATERIALS
Insulator / Contact
1 = Valox / Phosphor Bronze
2 = Valox / Beryllium Copper
3 = Ryton / Phosphor Bronze

PLATING
50µ" Nickel Underplate

CONTACT	TAIL
10 = 10µ" Au	100µ" Sn
20 = 15µ" Au	100µ" Sn
30 = 30µ" Au	100µ" Sn
40 = 10µ" Au	5µ" Au
50 = 15µ" Au	5µ" Au
60 = 30µ" Au	5µ" Au

MODIFICATIONS
010 = Card Extender For .062" [1.58] Thick PCB

CONSULT FACTORY FOR CONNECTORS BUILT TO YOUR SPECIFICATION

2100 Series Card Edge Connector
.125” X .250” Contact Spacing

Specifications

Insulator Material: Glass filled polyester, type PBT, 94 V-O, UL Rated.
Contact Material: Phosphor Bronze Alloy
Contact Plating: Gold and/or Tin over .000050” Nickel, (See Contact Plating Options).
Current Rating: 3 amp at 30°C
Contact Resistance:
Contact to Daughter Card:
10 m max.
Insulation Resistance:
5000 M min.
Dielectric Withstand Voltage:
1500 V AC
Daughter Board Insertion Force:
16 oz max. per contact pair when tested with a .071” thick gage.
Daughter Board Withdrawal Force:
1 oz min. per contact pair when tested with a .054” thick gage.
Operating Temperature:
-54°C to +125°C

Features

- Extra large chamfered entry
- Conforms to Bell-core spec TR-TSY-00078
- Extended card scoops available
- Replaceable contacts
- Molded in polarization available between contact, or on contact position.
- De-population of contacts per customer specification.
- Available in selective gold plate at contact point
- Many other custom options available, including, but not limited to:
  - Single or Both Ends Open
  - Shorting Contacts

Recognized under the recognized component Program of Underwriters Laboratories, Inc.
File Numbers: E146967 and E176234

For drawings, technical data or samples, contact E.C.S. at (714) 895-6351

POS. / CONTACTS	A	B	C
06/12	1.011 [25.68]	0.875 [22.23]	0.625 [15.88]
10/20	1.511 [38.38]	1.375 [34.93]	1.125 [28.58]
12/24	1.761 [44.73]	1.625 [41.28]	1.375 [34.93]
16/32	2.261 [57.43]	2.125 [53.98]	1.875 [47.63]
18/36	2.511 [63.78]	2.375 [60.33]	2.125 [53.98]
20/40	2.761 [70.13]	2.625 [66.68]	2.375 [60.33]
22/44	3.011 [76.48]	2.875 [73.03]	2.625 [66.68]
25/50	3.386 [86.00]	3.250 [82.55]	3.000 [76.20]
28/56	3.761 [95.53]	3.625 [92.08]	3.375 [85.73]
30/60	4.011 [101.88]	3.875 [98.43]	3.625 [92.08]
36/72	4.761 [120.93]	4.625 [117.48]	4.375 [111.13]
38/76	5.011 [127.28]	4.875 [123.83]	4.625 [117.48]
40/80	5.261 [133.63]	5.125 [130.18]	4.875 [123.83]
43/86	5.626 [143.15]	5.500 [139.70]	5.250 [133.35]
50/100	6.511 [165.38]	6.375 [161.93]	6.125 [155.58]
51/102	6.636 [168.55]	6.500 [165.10]	6.250 [158.75]
56/112	7.261 [184.43]	7.125 [180.98]	6.875 [174.63]
60/120	7.761 [197.13]	7.625 [193.68]	7.375 [187.33]

For reference only, can go 1 through 60 positions. Dimensions are in inch [mm]

MOUNTING STYLE

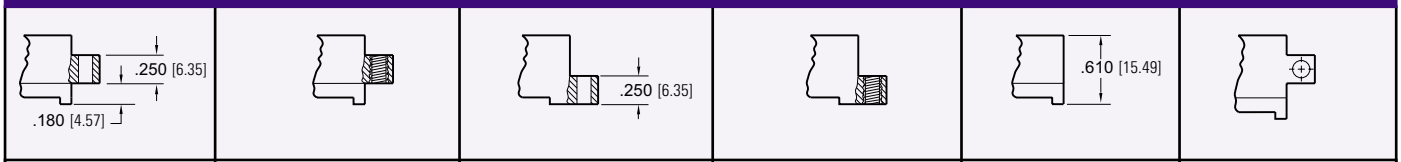

1 = Clearance Hole	2 = #4-40 Threaded Insert	3 = Flush Mount	4 = #4-40 Threaded Insert	5 = No Mounting Ear	6 = Side Mounting

ELECTRONIC CONNECTOR SERVICE INC. 11880 WESTERN AVE. STANTON, CA 90680 TOLL FREE (877) ECS-CONN TEL (714) 895-6351 FAX (714) 894-1858
WWW.ECSCONN.COM

.125” x .250” Contact Spacing

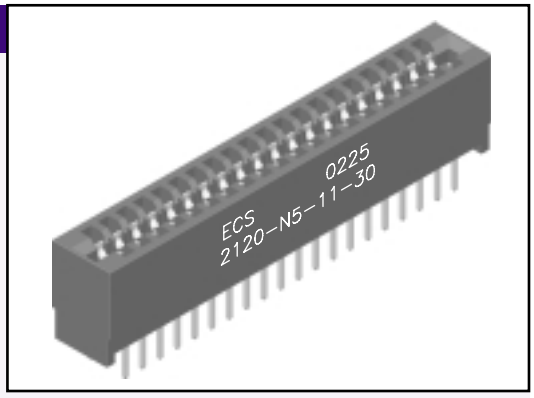

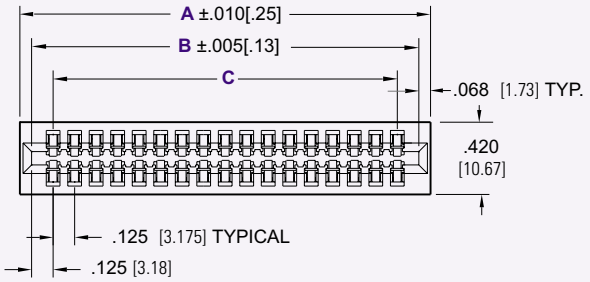

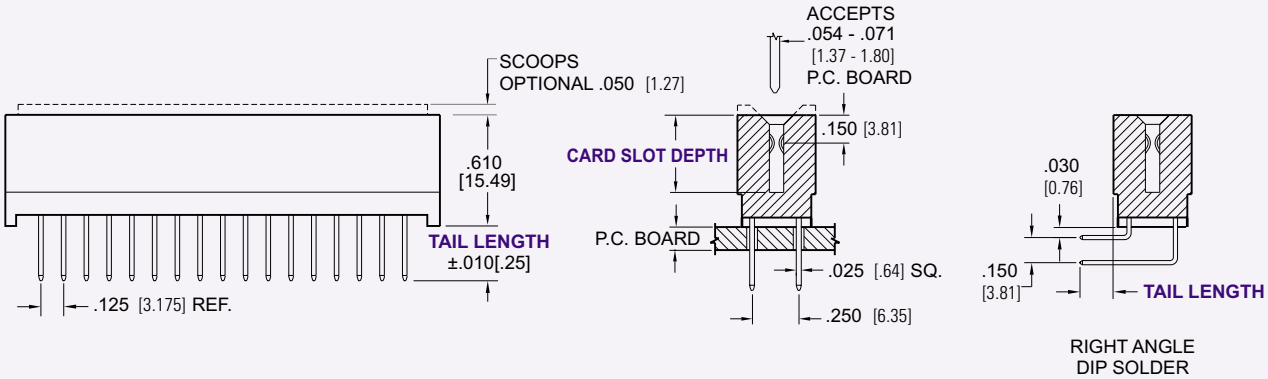

Dimensions are in inch [mm]

PART NUMBERING

21 XX — X X — X X — XX — XXX

SERIES CODE
.125 x .250 Centers Card Edge

NO. CONTACT PAIRS
01 - 60

SCOOPS
S = With
N = Without

MOUNTING STYLE
1 = Clearance Hole
2 = #4-40 Threaded Insert
3 = Flush Mount
4 = Flush Mount / #4-40 Threaded Insert
5 = No Mounting Ear
6 = Side Mounting

TAIL LENGTH
1 = .190 [4.83]
2 = .315 [8.00]
3 = .405 [10.29]
4 = .565 [14.35]
5 = .650 [16.51]
6 = .100 [2.54] Right Angle
7 = .180 [4.57] Right Angle
8 = .250 [6.35] Right Angle

CARD SLOT DEPTH
1 = .415 [10.54]
2 = .350 [8.89]
3 = .300 [7.62]

PLATING
50µ” Nickel Underplate

CONTACT	TAIL
10 = 10µ” Au	100µ” Sn
20 = 15µ” Au	100µ” Sn
30 = 30µ” Au	100µ” Sn
40 = 10µ” Au	5µ” Au
50 = 15µ” Au	5µ” Au
60 = 30µ” Au	5µ” Au

CUSTOM VARIATION
CONSULT FACTORY

CONSULT FACTORY FOR CONNECTORS BUILT TO YOUR SPECIFICATION

2200 Series Card Edge Connector
.125” X .250” Contact Spacing, Bellow Contacts

Specifications

Insulator Material: Glass filled polyester, type PBT, 94 V-O, UL Rated.
Contact Material: Phosphor Bronze Alloy
Contact Plating: Gold and/or Tin over .000050” Nickel, (See Contact Plating Options).
Current Rating: 5 amp at 30°C
Contact Resistance:
Contact to Daughter Card:
10 m Ω max.
Insulation Resistance:
5000 M Ω min.
Dielectric Withstand Voltage:
1500 V AC
Daughter Board Insertion Force:
16 oz max. per contact pair when tested with a .071” thick gage.
Daughter Board Withdrawal Force:
1 oz min. per contact pair when tested with a .054” thick gage.
Operating Temperature:
-54°C to +125°C

Features

- Extra large chamfered entry
- Conforms to Bell-core spec TR-TSY-00078
- Extended card scoops available
- Replaceable contacts
- Molded in polarization available between contact, or on contact position.
- De-population of contacts per customer specification.
- Available in selective gold plate at contact point
- Many other custom options available, including, but not limited to:

  - Single or Both Ends Open

Recognized under the recognized component Program of Underwriters Laboratories, Inc.
File Numbers: E146967 and E176234

For drawings, technical data or samples, contact E.C.S. at (714) 895-6351

POS./CONTACTS	A	B	C	D	E	F
06/12	0.625 [15.87]	0.875 [22.22]	1.035 [26.29]	1.295 [32.89]	1.555 [39.50]	0.875 [22.22]
10/20	1.125 [28.57]	1.375 [34.92]	1.535 [38.99]	1.795 [45.59]	2.055 [52.20]	1.375 [34.92]
14/28	1.625 [41.27]	1.875 [47.62]	2.035 [51.69]	2.295 [58.29]	2.555 [64.90]	1.875 [47.62]
15/30	1.750 [44.45]	2.000 [50.80]	2.160 [54.86]	2.420 [61.47]	2.680 [68.07]	2.000 [50.80]
18/36	2.125 [53.97]	2.375 [60.32]	2.535 [64.39]	2.795 [70.99]	3.055 [77.60]	2.375 [60.32]
22/44	2.625 [66.67]	2.875 [73.02]	3.035 [77.09]	3.295 [83.69]	3.555 [90.30]	2.875 [73.02]
24/48	2.875 [73.03]	3.125 [79.38]	3.285 [83.44]	3.545 [90.04]	3.805 [96.65]	3.125 [79.38]
28/56	3.375 [85.72]	3.625 [92.07]	3.785 [96.16]	4.045 [102.74]	4.305 [109.35]	3.625 [92.07]
30/60	3.625 [92.07]	3.875 [98.42]	4.035 [02.49]	4.295 [109.09]	4.555 [15.70]	3.875 [98.42]
31/62	3.750 [95.25]	4.000 [101.60]	4.160 [105.66]	4.420 [112.27]	4.680 [118.87]	4.000 [101.60]
32/64	3.875 [98.43]	4.125 [104.77]	4.285 [108.84]	4.545 [115.44]	4.805 [122.05]	4.125 [104.77]
35/70	4.250 [107.95]	4.500 [114.30]	4.660 [118.36]	4.920 [124.97]	5.180 [131.57]	4.500 [114.30]
36/72	4.375 [111.12]	4.625 [117.47]	4.785 [121.54]	5.045 [128.14]	5.305 [134.75]	4.625 [117.47]
40/80	4.875 [123.83]	5.125 [130.17]	5.285 [134.24]	5.545 [140.84]	5.805 [147.45]	5.125 [130.17]
43/86	5.250 [133.36]	5.500 [139.70]	5.660 [143.77]	5.920 [150.37]	6.180 [156.98]	5.500 [139.70]
44/88	5.375 [136.53]	5.625 [142.87]	5.785 [146.94]	6.045 [153.54]	6.305 [160.15]	5.625 [142.87]
49/98	6.000 [152.40]	6.250 [158.75]	6.410 [162.81]	6.670 [169.42]	6.930 [176.02]	6.250 [158.75]
50/100	6.125 [155.57]	6.375 [161.92]	6.535 [165.99]	6.795 [172.59]	7.055 [179.20]	6.375 [161.92]

For reference only, can go 1 through 50 positions.

Dimensions are in inch [mm]

MOUNTING STYLE

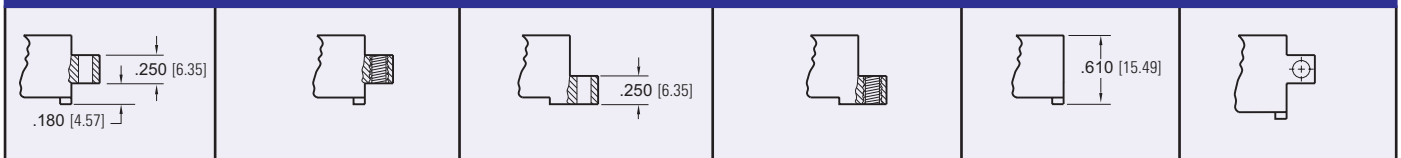

1 = Clearance Hole	2 = #4-40 Threaded Insert	3 = Flush Mount	4 = #4-40 Threaded Insert	5 = No Mounting Ear	6 = Side Mounting

ELECTRONIC CONNECTOR SERVICE INC. 11880 WESTERN AVE. STANTON, CA 90680 TOLL FREE (877) ECS-CONN TEL (714) 895-6351 FAX (714) 894-1858
WWW.ECSCONN.COM

.125” x .250” Contact Spacing, Bellow Contacts

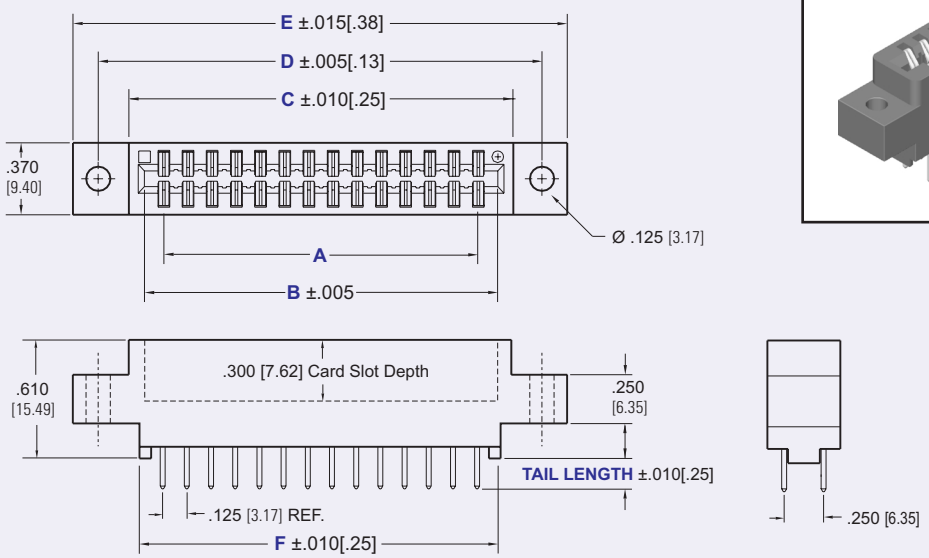

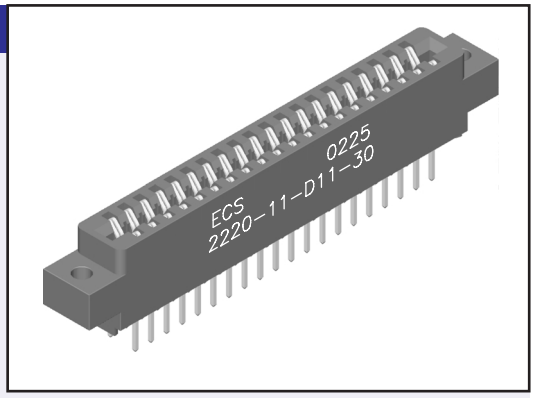

Dimensions are in inch [mm]

TERMINATION TYPE

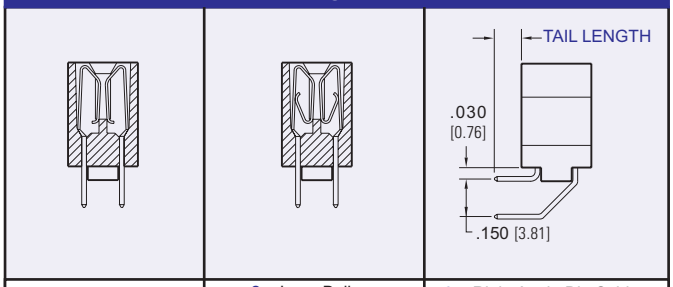

1 =Hair Pin Bellows	2 = Loop Bellows	3 = Right Angle Dip Solder

READOUT

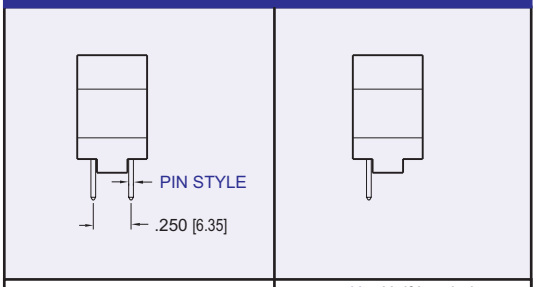

D = Dual	H = Half Loaded

PART NUMBERING

22 | XX — X | X — X | X | X — XX — XXX

SERIES CODE
.125” X .250” Dip Solder / Wire Wrap

NO. CONTACT PAIRS
01 - 50

TERMINATION TYPE
1 = Hairpin Bellows
2 = Loop Bellows
3 = Right Angle Bellows

MOUNTING STYLE
1 = Clearance Hole
2 = #4-40 Threaded Insert
3 = Flush Mount
4 = Flush Mount / #4-40 Insert
5 = No Mounting Ear
6 = Side Mounting

READOUT
D = Dual
H = Half Loaded

PIN STYLE
1 = .025 SQ.
2 = .026 DIA.

TAIL LENGTH
1 = .190 [4.83] Dip Solder
2 = .560 [14.22] Wire Wrap
3 = .100 [2.54] Right Angle
4 = .180 [4.57] Right Angle
5 = .250 [6.35] Right Angle

PLATING
50µ” Nickel Underplate

CONTACT	TAIL
10 = 10µ” Au	100µ” Sn
20 = 15µ” Au	100µ” Sn
30 = 30µ” Au	100µ” Sn
40 = 10µ” Au	5µ” Au
50 = 15µ” Au	5µ” Au
60 = 30µ” Au	5µ” Au

CUSTOM VARIATION
CONSULT FACTORY

CONSULT FACTORY FOR CONNECTORS BUILT TO YOUR SPECIFICATION

ELECTRONIC CONNECTOR SERVICE INC. 11880 WESTERN AVE. STANTON, CA 90680 TOLL FREE (877) ECS-CONN TEL (714) 895-6351 FAX (714) 894-1858
WWW.ECSCONN.COM

4100 Series Card Edge Connector
.150” X .200” Contact Spacing

Specifications

Insulator Material: Glass filled polyester, type PBT, 94 V-O, UL Rated.
Contact Material: Phosphor Bronze Alloy
Contact Plating: Gold and/or Tin over .000050” Nickel, (See Contact Plating Options).
Current Rating: 5 amp at 30°C
Contact Resistance:
Contact to Daughter Card:
10 m max.
Insulation Resistance:
5000 M min.
Dielectric Withstand Voltage:
1800 V AC
Daughter Board Insertion Force:
16 oz max. per contact pair when tested with a .071” thick gage.
Daughter Board Withdrawal Force:
1 oz min. per contact pair when tested with a .054” thick gage.
Recommended Board Thickness:
.093”+
Operating Temperature:
-54°C to +125°C

Features

- Extra large chamfered entry
- Conforms to Bell-core spec TR-TSY-00078
- Extended card scoops available
- Replaceable contacts
- Molded in polarization available between contact, or on contact position.
- De-population of contacts per customer specification.
- Available in selective gold plate at contact point
- Many other custom options available, including, but not limited to:
  - Single or Both Ends Open
  - Shorting Contacts

Recognized under the recognized component Program of Underwriters Laboratories, Inc.
File Numbers: E146967 and E176234

For drawings, technical data or samples, contact E.C.S. at (714) 895-6351

POS. / CONTACTS	A	B	C
06/12	1.186 [30.12]	1.050 [26.67]	0.750 [19.05]
10/20	1.786 [45.36]	1.650 [41.91]	1.350 [46.29]
12/24	2.086 [52.98]	1.950 [49.53]	1.650 [41.91]
15/30	2.536 [64.41]	2.300 [58.42]	2.100 [53.34]
18/36	2.986 [75.84]	2.850 [72.39]	2.550 [64.77]
20/40	3.286 [83.41]	3.150 [80.01]	2.850 [72.39]
22/44	3.586 [91.08]	3.450 [86.63]	3.150 [80.01]
25/50	4.036 [102.51]	3.900 [99.06]	3.600 [91.44]
28/56	4.486 [113.94]	4.350 [110.49]	4.050 [102.87]
30/60	4.786 [121.56]	4.650 [118.11]	4.350 [110.49]
31/62	4.936 [125.37]	4.800 [121.92]	4.500 [114.30]
35/70	5.536 [140.61]	5.400 [137.16]	5.100 [129.54]
36/72	5.686 [144.42]	5.555 [140.97]	5.250 [133.35]
40/80	6.286 [159.66]	6.150 [156.21]	5.850 [148.59]
43/86	6.736 [171.09]	6.600 [167.64]	6.300 [160.02]

For reference only, can go 1 through 43 positions.

Dimensions are in inch [mm]

MOUNTING STYLE

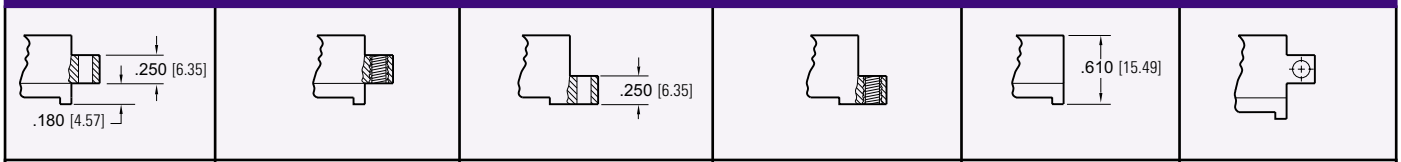

1 = Clearance Hole	2 = #4-40 Threaded Insert	3 = Flush Mount	4 = #4-40 Threaded Insert	5 = No Mounting Ear	6 = Side Mounting

ELECTRONIC CONNECTOR SERVICE INC. 11880 WESTERN AVE. STANTON, CA 90680 TOLL FREE (877) ECS-CONN TEL (714) 895-6351 FAX (714) 894-1858
WWW.ECSCONN.COM

.150” x .200” Contact Spacing

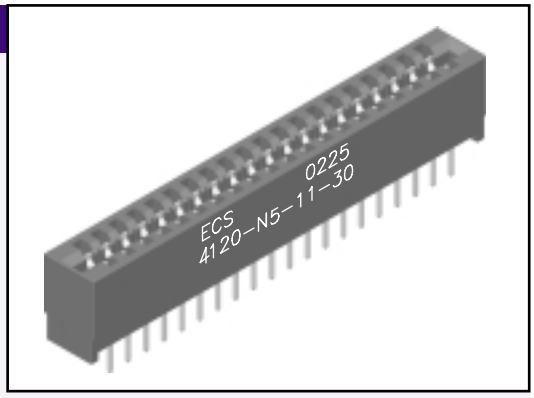

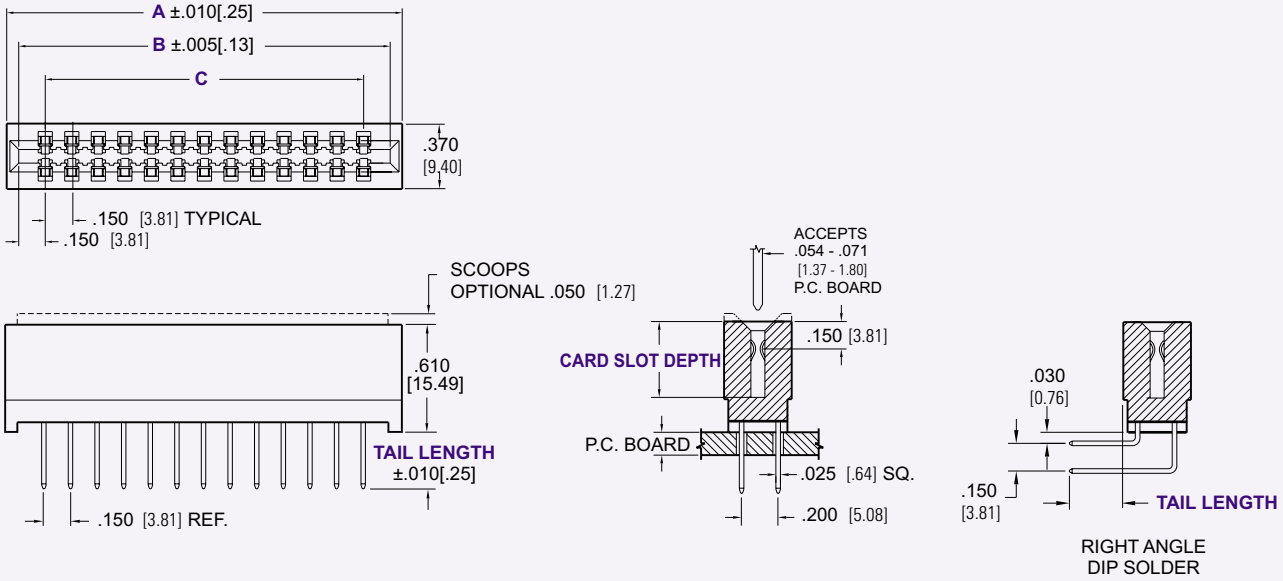

Dimensions are in inch [mm]

PART NUMBERING

41 XX — X X — X X — XX — XXX

SERIES CODE
.150” x .200” Contact Spacing, Card Edge

NO. CONTACT PAIRS
01 - 43

SCOOPS
S = With
N = Without

MOUNTING STYLE
1 = Clearance Hole
2 = #4-40 Threaded Insert
3 = Flush Mount
4 = Flush Mount / #4-40 Threaded Insert
5 = No Mounting Ear
6 = Side Mounting

CARD SLOT DEPTH
1 = .415 [10.54]
2 = .350 [8.89]
3 = .300 [7.62]

TAIL LENGTH
1 = .190 [4.83]
2 = .315 [8.00]
3 = .405 [10.29]
4 = .565 [14.35]
5 = .650 [16.51]
6 = .100 [2.54] Right Angle
7 = .180 [4.57] Right Angle
8 = .250 [6.35] Right Angle

PLATING
50µ” Nickel Underplate

CONTACT	TAIL
10 = 10µ” Au	100µ” Sn
20 = 15µ” Au	100µ” Sn
30 = 30µ” Au	100µ” Sn
40 = 10µ” Au	5µ” Au
50 = 15µ” Au	5µ” Au
60 = 30µ” Au	5µ” Au

CUSTOM VARIATION
CONSULT FACTORY

CONSULT FACTORY FOR CONNECTORS BUILT TO YOUR SPECIFICATION

4200 Series Card Edge Connector
.150” X .200” Contact Spacing, Bellow Contacts

Specifications

Insulator Material: Glass filled polyester, type PBT, 94 V-O, UL Rated.
Contact Material: Phosphor Bronze Alloy
Contact Plating: Gold and/or Tin over .000050” Nickel, (See Contact Plating Options).
Current Rating: 5 amp at 30°C
Contact Resistance:
Contact to Daughter Card:
10 m max.
Insulation Resistance:
5000 M min.
Dielectric Withstand Voltage:
1800 V AC
Daughter Board Insertion Force:
16 oz max. per contact pair when tested with a .071” thick gage.
Daughter Board Withdrawal Force:
1 oz min. per contact pair when tested with a .054” thick gage.
Operating Temperature:
-54°C to +125°C

Features

- Extra large chamfered entry
- Conforms to Bell-core spec TR-TSY-00078
- Extended card scoops available
- Replaceable contacts
- Molded in polarization available between contact, or on contact position.
- De-population of contacts per customer specification.
- Available in selective gold plate at contact point
- Many other custom options available, including, but not limited to:

  - Single or Both Ends Open

Recognized under the recognized component Program of Underwriters Laboratories, Inc.
File Numbers: E146967 and E176234

For drawings, technical data or samples, contact E.C.S. at (714) 895-6351

POS. / CONTACTS	A	B	C	D	E	F
06/12	0.750 [19.05]	1.050 [26.67]	1.190 [30.23]	1.500 [38.10]	1.750 [44.45]	1.000 [25.40]
08/16	1.050 [26.67]	1.350 [34.29]	1.490 [37.85]	1.800 [45.72]	2.050 [52.07]	1.300 [33.02]
10/20	1.350 [34.29]	1.650 [41.91]	1.630 [41.40]	1.940 [49.28]	2.190 [55.63]	1.600 [40.64]
12/24	1.650 [41.91]	1.950 [49.53]	2.090 [53.09]	2.400 [60.96]	2.650 [67.31]	1.900 [48.26]
15/30	2.100 [53.34]	2.400 [60.96]	2.540 [64.52]	2.850 [72.39]	3.100 [78.74]	2.350 [59.69]
18/36	2.550 [64.77]	2.850 [72.39]	2.990 [75.95]	3.300 [83.82]	3.550 [90.17]	2.800 [71.12]
20/40	2.850 [72.39]	3.150 [80.01]	3.290 [83.57]	3.600 [91.44]	3.850 [97.79]	3.100 [78.74]
22/44	3.150 [80.01]	3.450 [87.63]	3.590 [91.19]	3.900 [99.06]	4.150 [105.41]	3.400 [86.36]
24/48	3.750 [87.63]	3.750 [95.25]	3.890 [98.81]	4.200 [106.68]	4.450 [113.03]	3.700 [93.98]
25/50	3.600 [91.44]	3.900 [99.06]	4.040 [102.62]	4.350 [110.49]	4.600 [116.84]	3.850 [97.79]
28/56	4.050 [102.87]	4.350 [110.49]	4.490 [114.05]	4.800 [121.92]	5.050 [128.27]	4.300 [109.22]
30/60	4.350 [110.49]	4.650 [118.11]	4.790 [121.67]	5.100 [129.54]	5.350 [135.89]	4.600 [116.84]
31/62	4.500 [114.30]	4.800 [121.92]	4.940 [125.48]	5.250 [133.35]	5.500 [139.70]	4.750 [120.65]
36/72	5.250 [133.35]	5.550 [140.97]	5.690 [144.53]	6.000 [152.40]	6.250 [158.75]	5.500 [139.70]
40/80	5.850 [148.59]	6.150 [156.21]	6.290 [159.77]	6.600 [167.64]	6.850 [173.99]	6.100 [154.94]
43/86	6.300 [160.02]	6.600 [167.64]	6.740 [171.96]	7.050 [179.07]	7.300 [185.42]	6.550 [166.37]

For reference only, can go 1 through 43 positions.

Dimensions are in inch [mm]

MOUNTING STYLE

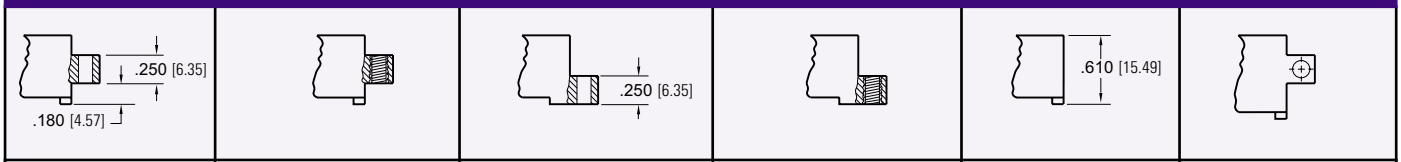

1 = Clearance Hole	2 = #4-40 Threaded Insert	3 = Flush Mount	4 = #4-40 Threaded Insert	5 = No Mounting Ear	6 = Side Mounting

ELECTRONIC CONNECTOR SERVICE INC. 11880 WESTERN AVE. STANTON, CA 90680 TOLL FREE (877) ECS-CONN TEL (714) 895-6351 FAX (714) 894-1858
WWW.ECSCONN.COM

.150” x .200” Contact Spacing, Bellow Contacts

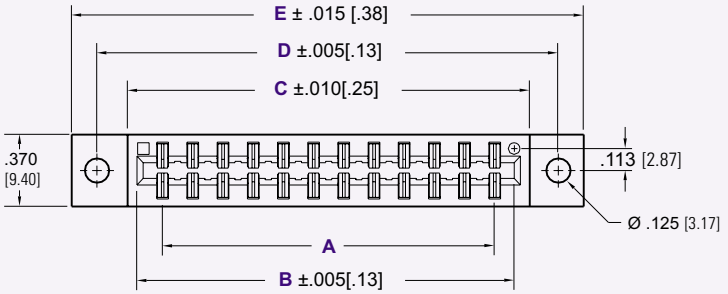

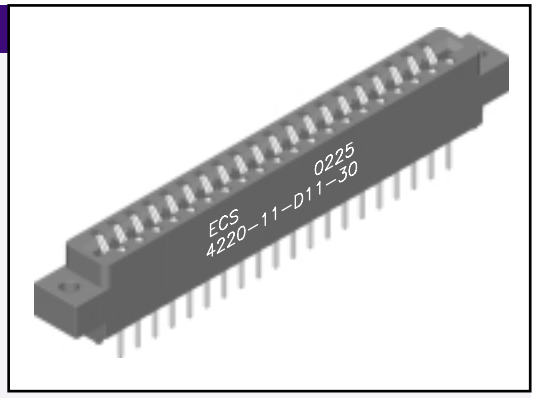

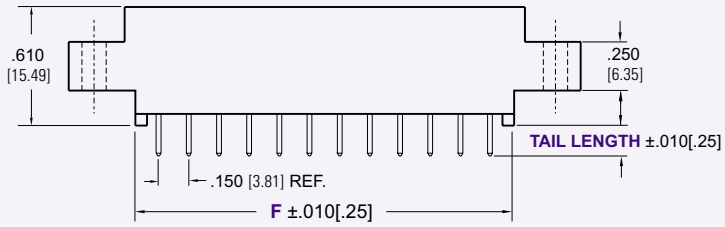

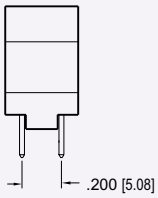

Dimensions are in inch [mm]

TERMINATION TYPE

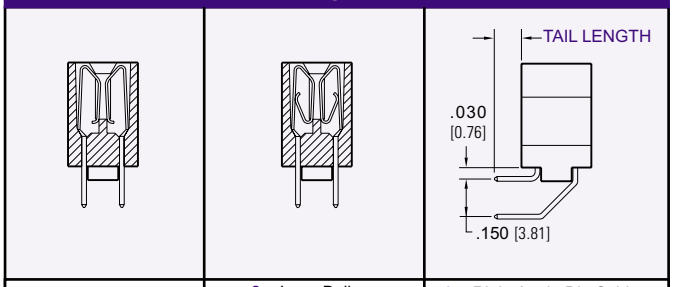

1 =Hair Pin Bellows	2 = Loop Bellows	3 = Right Angle Dip Solder

READOUT

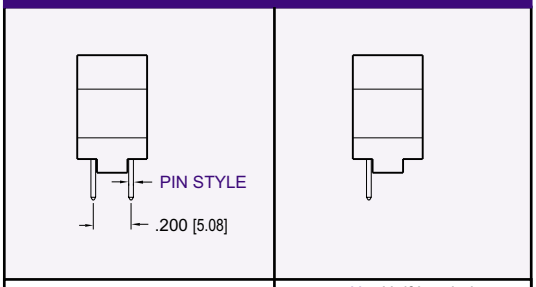

D = Dual	H = Half Loaded

PART NUMBERING

42 XX — X X — X X X — XX — XXX

SERIES CODE
.150” X .200” Dip Solder / Wire Wrap

NO. CONTACT PAIRS
01 - 43

TERMINATION TYPE
1 = Hairpin Bellows
2 = Loop Bellows
3 = Right Angle Bellows

MOUNTING STYLE
1 = Clearance Hole
2 = #4-40 Threaded Insert
3 = Flush Mount
4 = Flush Mount / #4-40 Insert
5 = No Mounting Ear
6 = Side Mounting

READOUT
D = Dual
H = Half Loaded

PIN STYLE
1 = .025 SQ.
2 = .026 DIA.

TAIL LENGTH
1 = .190 [4.83] Dip Solder
2 = .560 [14.22] Wire Wrap
3 = .100 [2.54] Right Angle
4 = .180 [4.57] Right Angle
5 = .250 [6.35] Right Angle

PLATING
50µ” Nickel Underplate

CONTACT	TAIL
10 = 10µ” Au	100µ” Sn
20 = 15µ” Au	100µ” Sn
30 = 30µ” Au	100µ” Sn
40 = 10µ” Au	5µ” Au
50 = 15µ” Au	5µ” Au
60 = 30µ” Au	5µ” Au

CUSTOM VARIATION
CONSULT FACTORY

CONSULT FACTORY FOR CONNECTORS BUILT TO YOUR SPECIFICATION

ELECTRONIC CONNECTOR SERVICE INC. 11880 WESTERN AVE. STANTON, CA 90680 TOLL FREE (877) ECS-CONN TEL (714) 895-6351 FAX (714) 894-1858
WWW.ECSCONN.COM

4400 Series Card Edge Connector

.150” Contact Centers, .031” X .062” Pin, Single Row

Specifications

Insulator Material: Glass filled polyester, type PBT, 94 V-O, UL Rated.
Contact Material: Phosphor Bronze Alloy
Contact Plating: Gold and/or Tin over .000050” Nickel, (See Contact Plating Options).
Current Rating: 5 amp at 30°C
Contact Resistance:
Contact to Daughter Card:
10 m max.
Insulation Resistance:
5000 M min.
Dielectric Withstand Voltage:
1800 V AC
Daughter Board Insertion Force:
16 oz max. per contact pair when tested with a .071” thick gage.
Daughter Board Withdrawal Force:
1 oz min. per contact pair when tested with a .054” thick gage.
Operating Temperature:
-54°C to +125°C

Features

- Extra large chamfered entry
- Conforms to Bell-core spec TR-TSY-00078
- Extended card scoops available
- Replaceable contacts
- Molded in polarization available between contact, or on contact position.
- De-population of contacts per customer specification.
- Available in selective gold plate at contact point
- Many other custom options available, including, but not limited to:

  - Single or Both Ends Open

Recognized under the recognized component Program of Underwriters Laboratories, Inc.
File Numbers: E146967 and E176234

For drawings, technical data or samples, contact E.C.S. at (714) 895-6351

MOUNTING STYLE

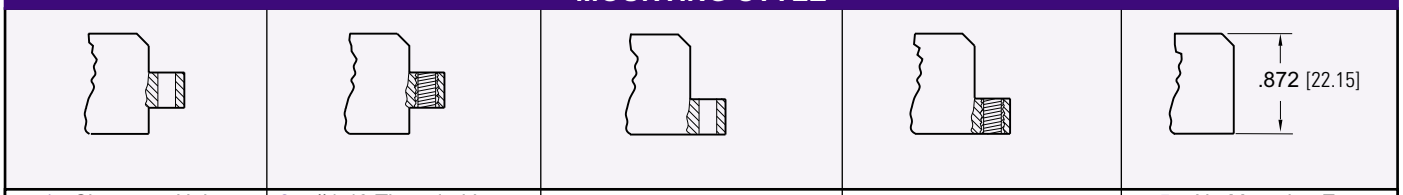

1= Clearance Hole	2 = #4-40 Threaded Insert	3 = Flush Mount	4 = #4-40 Flush Mount	5 = No Mounting Ear

.150” Contact Centers, Single Row

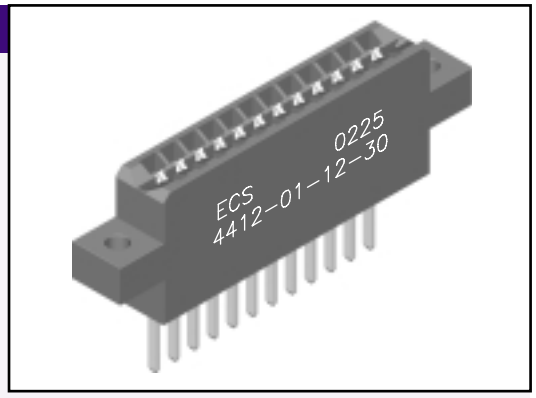

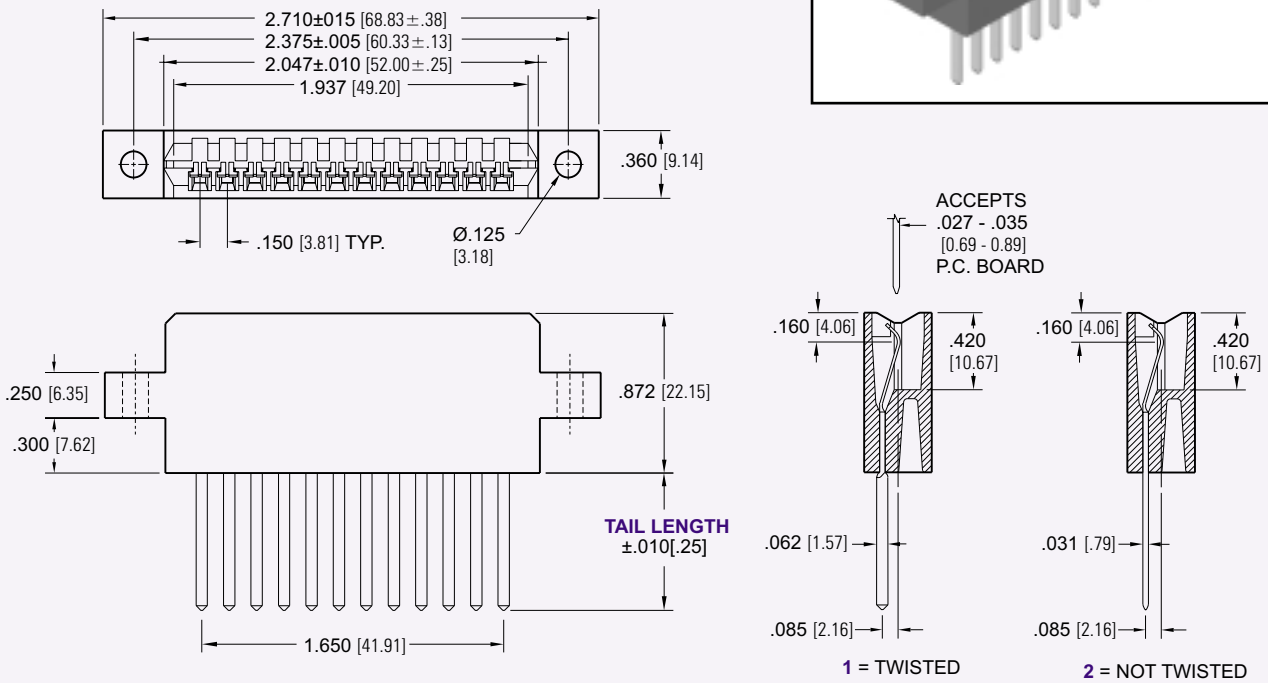

Dimensions are in inch [mm]

PART NUMBERING

44 | 12 — XX — X | X — XX — XXX

SERIES CODE
.150” Contact Centers, Single Row

NO. CONTACT PAIRS
12

MOUNTING STYLE
01 = Clearance Hole
02 = #4-40 Threaded Insert
03 = Flush Mount
04 = Flush mount / #4-40 Threaded Insert
05 = No Mounting Ear

TAIL LENGTH
1 = .250 [6.35]
2 = .570 [14.48]
3 = .750 [19.05]

TAIL TWIST
1 = Twisted
2 = Not Twisted

PLATING
50µ” Nickel Underplate

CONTACT	TAIL
10 = 10µ” Au	100µ” Sn
20 = 15µ” Au	100µ” Sn
30 = 30µ” Au	100µ” Sn
40 = 10µ” Au	5µ” Au
50 = 15µ” Au	5µ” Au
60 = 30µ” Au	5µ” Au

CUSTOM VARIATION
CONSULT FACTORY

CONSULT FACTORY FOR CONNECTORS BUILT TO YOUR SPECIFICATION

3100 Series Card Edge Connector
.156” X .200” Contact Spacing

Specifications

Insulator Material: Glass filled polyester, type PBT, 94 V-O, UL Rated.
Contact Material: Phosphor Bronze Alloy
Contact Plating: Gold and/or Tin over .000050” Nickel, (See Contact Plating Options).
Current Rating: 5 amp at 30°C
Contact Resistance:
Contact to Daughter Card:
10 m max.
Insulation Resistance:
5000 M min.
Dielectric Withstand Voltage:
1800 V AC
Daughter Board Insertion Force:
16 oz max. per contact pair when tested with a .071” thick gage.
Daughter Board Withdrawal Force:
1 oz min. per contact pair when tested with a .054” thick gage.
Operating Temperature:
-54°C to +125°C

Features

- Extra large chamfered entry
- Conforms to Bell-core spec TR-TSY-00078
- Extended card scoops available
- Replaceable contacts
- Molded in polarization available between contact, or on contact position.
- De-population of contacts per customer specification.
- Available in selective gold plate at contact point
- Many other custom options available, including, but not limited to:
  - Single or Both Ends Open
  - Shorting Contacts

Recognized under the recognized component Program of Underwriters Laboratories, Inc.
File Numbers: E146967 and E176234

For drawings, technical data or samples, contact E.C.S. at (714) 895-6351

POS. / CONTACTS	A	B	C
06/12	1.228 [31.19]	1.092 [27.74]	0.780 [19.81]
10/20	1.852 [47.04]	1.716 [43.59]	1.404 [35.66]
12/24	2.164 [54.97]	2.028 [51.51]	1.716 [43.59]
15/30	2.632 [66.85]	2.496 [63.40]	2.184 [55.47]
18/36	3.100 [78.74]	2.964 [75.29]	2.652 [67.36]
20/40	3.412 [86.67]	3.276 [83.21]	2.964 [75.29]
22/44	3.724 [94.59]	3.588 [91.14]	3.276 [83.21]
25/50	4.192 [106.48]	4.056 [103.02]	3.744 [95.10]
28/56	4.660 [118.36]	4.524 [114.91]	4.212 [106.99]
30/60	4.972 [126.29]	4.836 [122.83]	4.524 [114.91]
31/62	5.128 [130.25]	4.992 [126.80]	4.680 [118.87]
35/70	5.752 [146.10]	5.616 [142.65]	5.304 [137.72]
36/72	5.908 [150.06]	5.772 [146.61]	5.460 [138.68]
40/80	6.532 [165.91]	6.396 [162.46]	6.084 [154.53]
43/86	7.000 [177.80]	6.864 [174.35]	6.552 [166.42]

For reference only, can go 1 through 43 positions.

Dimensions are in inch [mm]

MOUNTING STYLE

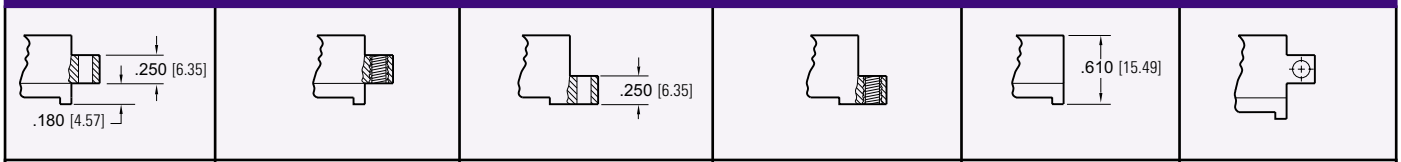

1 = Clearance Hole	2 = #4-40 Threaded Insert	3 = Flush Mount	4 = #4-40 Threaded Insert	5 = No Mounting Ear	6 = Side Mounting

ELECTRONIC CONNECTOR SERVICE INC. 11880 WESTERN AVE. STANTON, CA 90680 TOLL FREE (877) ECS-CONN TEL (714) 895-6351 FAX (714) 894-1858
WWW.ECSCONN.COM

.156” x .200” Contact Spacing

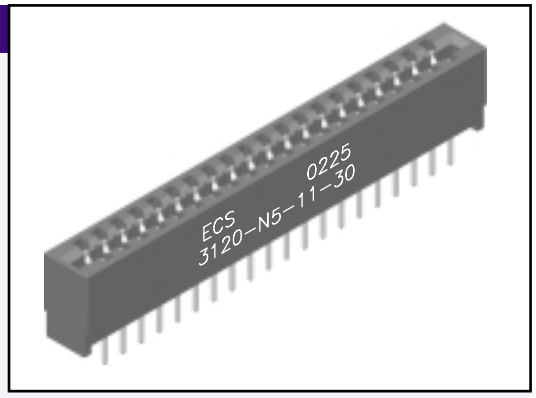

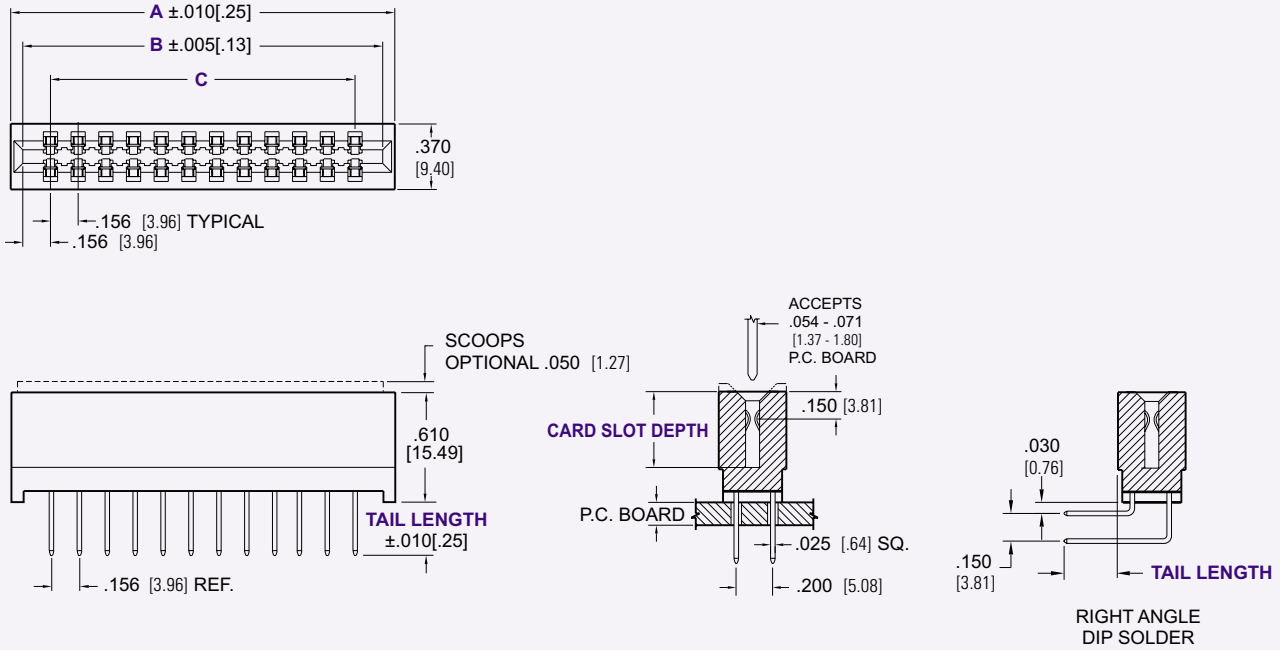

Dimensions are in inch [mm]

PART NUMBERING

31 XX — X X — X X — XX — XXX

SERIES CODE
.156 x .200 Centers Card Edge

NO. CONTACT PAIRS
01 - 43

SCOOPS
S = With
N = Without

MOUNTING STYLE
1 = Clearance Hole
2 = #4-40 Threaded Insert
3 = Flush Mount
4 = Flush Mount / #4-40 Threaded Insert
5 = No Mounting Ear
6 = Side Mounting

CARD SLOT DEPTH
1 = .415 [10.54]
2 = .350 [8.89]
3 = .300 [7.62]

TAIL LENGTH
0 = .130 [3.30]
1 = .190 [4.83]
2 = .315 [8.00]
3 = .405 [10.29]
4 = .565 [14.35]
5 = .650 [16.51]
6 = .100 [2.54] Right Angle
7 = .180 [4.57] Right Angle
8 = .250 [6.35] Right Angle

PLATING
50µ” Nickel Underplate

CONTACT	TAIL
10 = 10µ” Au	100µ” Sn
20 = 15µ” Au	100µ” Sn
30 = 30µ” Au	100µ” Sn
40 = 10µ” Au	5µ” Au
50 = 15µ” Au	5µ” Au
60 = 30µ” Au	5µ” Au

CUSTOM VARIATION
CONSULT FACTORY

CONSULT FACTORY FOR CONNECTORS BUILT TO YOUR SPECIFICATION

3300 Series Low Profile Card Edge Connector
.156 [3.96] Contact Centers

Specifications

Insulator Material: Glass filled polyester, type PBT, 94 V-O, UL Rated.
Contact Material: Phosphor Bronze Alloy
Contact Plating: Gold and/or Tin over .000050" Nickel, (See Contact Plating Options).
Current Rating: 5 amp at 30°C
Contact Resistance: Contact to Daughter Card: 10 m
Insulation Resistance: 5000 M
Dielectric Withstand Voltage: 1800 V AC
Daughter Board Insertion Force: 16 oz max. per contact pair when tested with a .071" thick gage.

Daughter Board Withdrawal Force: 1 oz min. per contact pair when tested with a .054" thick gage.

Recognized under the recognized component Program of Underwriters Laboratories, Inc.
File Numbers: E146967 and E176234

For drawings, technical data or samples, contact E.C.S. at (714) 895-6351

CONTACTS	A	B	C	D	E	F
2/4 3/6 6/12	.156 [3.96] .312 [7.92] .780 [19.81]	.476 [12.09] .632 [16.05] 1.100 [27.94]	.596 [15.14] .772 [19.10] 1.220 [30.99]	1.533 [38.94]	1.875 [47.63]	3.25 [8.26]
8/16 10/20 11/22	1.092 [27.74] 1.404 [35.66] 1.560 [39.62]	1.412 [35.86] 1.724 [43.79] 1.880 [47.75]	1.532 [38.91] 1.844 [46.84] 2.000 [50.80]	1.845 [46.86] 2.157 [54.79] 2.313 [58.75]	2.187 [55.55] 2.499 [63.47] 2.655 [67.44]	
12/24 15/30 18/36	1.716 [43.59] 2.184 [55.47] 2.652 [67.36]	2.036 [51.71] 2.504 [63.60] 2.972 [75.49]	2.156 [54.76] 2.624 [66.65] 3.092 [78.54]	2.469 [62.71] 2.937 [74.60] 3.405 [86.49]	2.811 [71.40] 3.279 [83.29] 3.747 [95.17]	
22/44 24/48 25/50	3.276 [83.21] 3.588 [91.14] 3.744 [95.10]	3.596 [91.34] 3.908 [99.26] 4.064 [103.23]	3.716 [94.39] 4.028 [102.31] 4.184 [106.27]	4.029 [102.34] 4.341 [110.26] 4.497 [114.22]	4.371 [111.02] 4.683 [118.95] 4.839 [122.91]	
28/56 36/72	4.212 [106.98] 5.460 [138.68]	4.532 [115.11] 5.780 [146.81]	4.652 [118.16] 5.900 [149.86]	4.965 [126.11] 6.213 [157.81]	5.307 [134.80] 6.555 [166.50]	.438 [11.13] .438 [11.13]
43/86 44/88	6.552 [166.42] 6.708 [170.38]	6.872 [174.55] 7.028 [178.51]	6.992 [177.60] 7.148 [181.56]	7.305 [185.55] 7.461 [189.51]	7.647 [194.23] 7.803 [198.20]	.500 [12.70] .500 [12.70]

Dimensions are in inch [mm]

POLARIZING KEYS

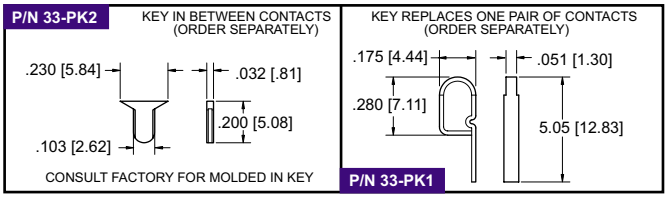

.156[3.96] Contact Centers, Low Profile

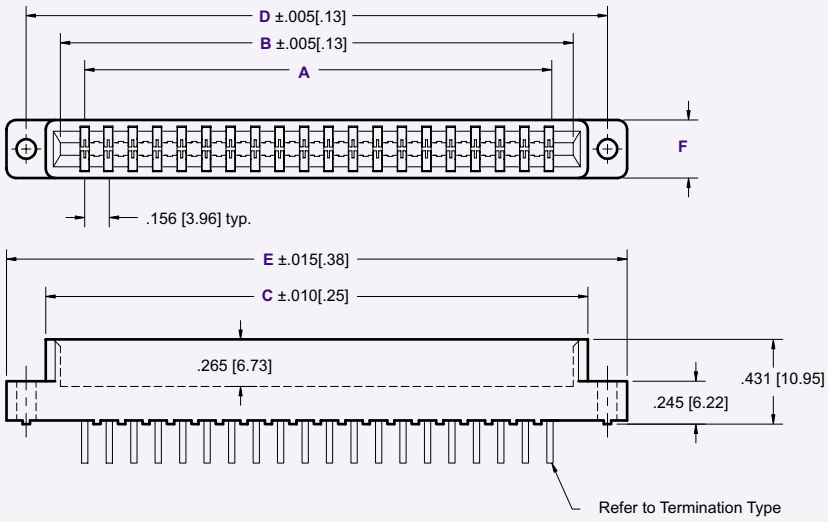

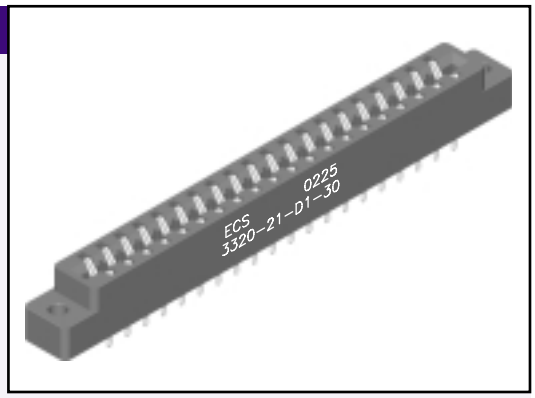

Dimensions are in inch [mm]

TERMINATION TYPE

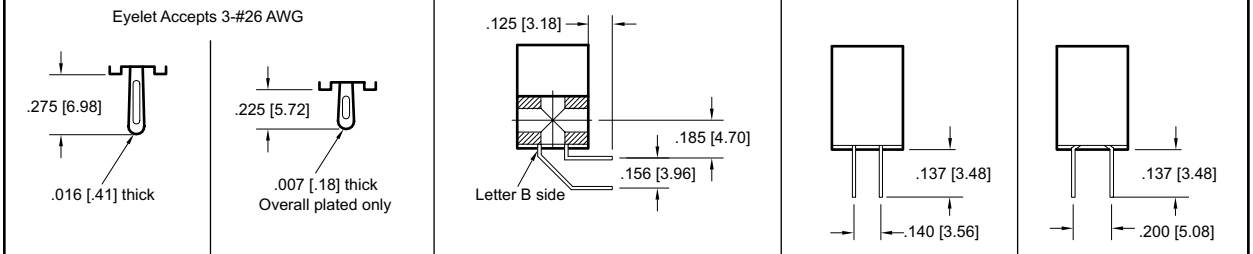

1 = Eyelet | 2 = Eyelet | 3 = Right Angle | 4 = Narrow Dip Solder | 5 = Wide Dip Solder

MOUNTING STYLE

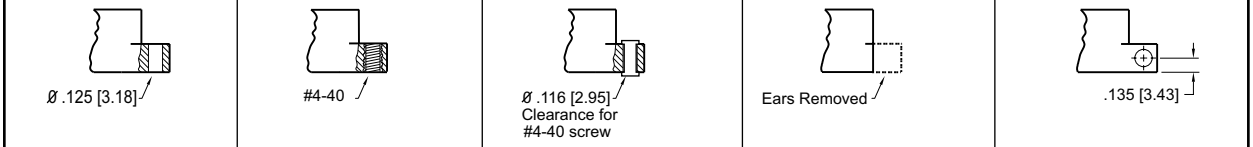

1 = Clearance Hole | 2 = Threaded Insert | 3 = Floating Bobbin | 4 = No Mounting Ear | 5 = Side Mounting

PART NUMBERING

33 XX — X X — D X — XX — XXX

SERIES CODE
.156" Center Low Profile Card Edge

NO. CONTACT PAIRS
01 - 44

TERMINATION TYPE
1 = Eyelet (.016[.41] thick)
2 = Eyelet (.007[.18] thick)
3 = Right Angle
4 = Narrow Dip Solder
5 = Wide Dip Solder

MOUNTING STYLE
1 = Clearance Hole
2 = Threaded Insert
3 = Floating Bobbin
4 = No Mounting Ear
5 = Side Mounting

MATERIALS
Insulator / Contact
1 = Valox / Phosphor Bronze
2 = Valox / Beryllium Copper

PLATING
50µ" Nickel Underplate

CONTACT	TAIL
10 = 10µ" Au	100µ" Sn
20 = 15µ" Au	100µ" Sn
30 = 30µ" Au	100µ" Sn
40 = 10µ" Au	5µ" Au
50 = 15µ" Au	5µ" Au
60 = 30µ" Au	5µ" Au

MODIFICATIONS
010 = Card Extender For .062" [1.58] Thick PCB

CONSULT FACTORY FOR CONNECTORS BUILT TO YOUR SPECIFICATION

ELECTRONIC CONNECTOR SERVICE INC. 11880 WESTERN AVE. STANTON, CA 90680 TOLL FREE (877) ECS-CONN TEL (714) 895-6351 FAX (714) 894-1858
WWW.ECSCONN.COM

3700 Series Card Edge Connector
.156” X .200” Contact Spacing, .031” X .062” Pin

Specifications

Insulator Material: Glass filled polyester, type PBT, 94 V-O, UL Rated.
Contact Material: Phosphor Bronze Alloy CA510
Contact Plating: Gold and/or Tin over .000050” Nickel, (See Contact Plating Options).
Current Rating: 5 amp at 30°C
Contact Resistance:
Contact to Daughter Card:
10 m max.
Insulation Resistance:
5000 M min.
Dielectric Withstand Voltage:
1800 V AC
Daughter Board Insertion Force:
16 oz max. per contact pair when tested with a .071” thick gage.
Daughter Board Withdrawal Force:
1 oz min. per contact pair when tested with a .054” thick gage.
Operating Temperature:
-54°C to +125°C

Features

- Extra large chamfered entry
- Conforms to Bell-core spec TR-TSY-00078
- Extended card scoops available
- Replaceable contacts
- Molded in polarization available between contact, or on contact position.
- De-population of contacts per customer specification.
- Available in selective gold plate at contact point
- Many other custom options available, including, but not limited to:
  - Single or Both Ends Open
  - Shorting Contacts

Recognized under the recognized component Program of Underwriters Laboratories, Inc.
File Numbers: E146967 and E176234

For drawings, technical data or samples, contact E.C.S. at (714) 895-6351

POS. / CONTACTS	A	B	C	D	E
10/20	2.425 [61.60]	2.156 [54.76]	1.900 [48.26]	1.724 [43.79]	1.404 [35.66]
15/30	3.205 [81.41]	2.940 [74.68]	2.675 [67.95]	2.504 [63.60]	2.184 [55.47]
22/44	4.295 [109.10]	4.032 [102.41]	3.765 [95.63]	3.596 [91.34]	3.276 [83.21]

Dimensions are in inch [mm]

MOUNTING STYLE

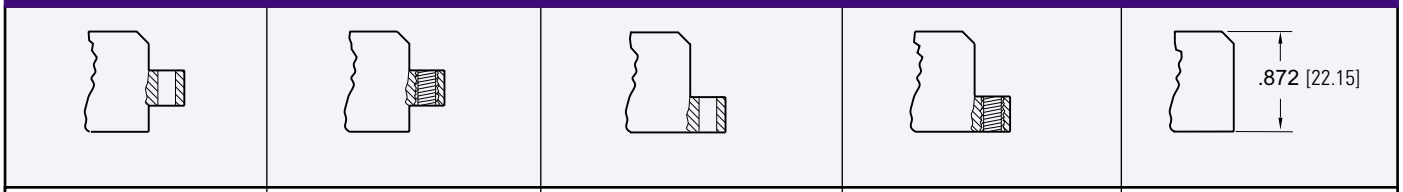

1 = Clearance Hole	2 = #4-40 Threaded Insert	3 = Flush Mount	4 = #4-40 Flush Mount	5 = No Mounting Ear

ELECTRONIC CONNECTOR SERVICE INC. 11880 WESTERN AVE. STANTON, CA 90680 TOLL FREE (877) ECS-CONN TEL (714) 895-6351 FAX (714) 894-1858
WWW.ECSCONN.COM

.156” x .200” Contact Spacing

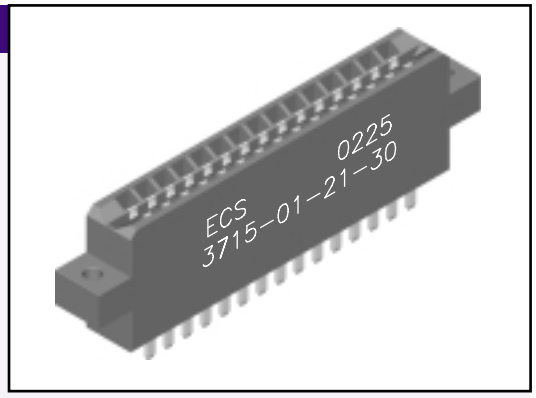

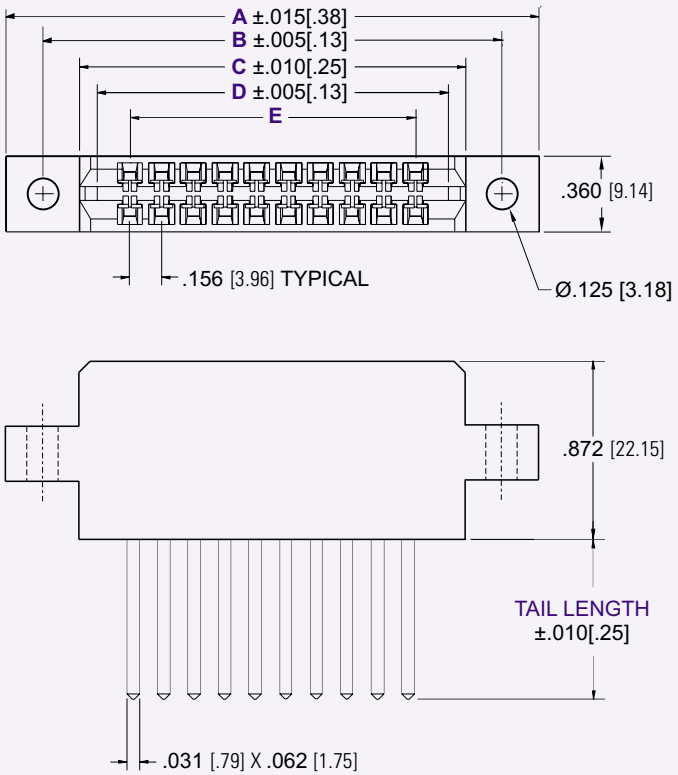

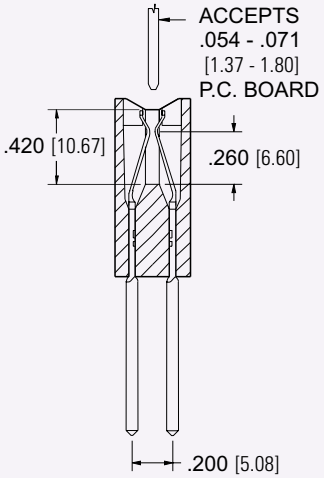

1 = TWISTED

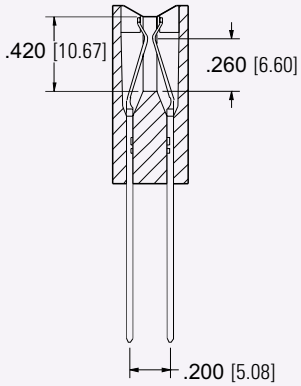

2 = NOT TWISTED

Dimensions are in inch [mm]

PART NUMBERING

37 XX — X X — X X — XX

SERIES CODE
.156 X .200 Center .031 X .062 Pins

NO. CONTACT PAIRS
10
15
22

BODY STYLE
01 = Clearance Hole
02 = #4-40 Threaded Insert
03 = Flush Mount
04 = Flush Mount / #4-40 Threaded Insert
05 = No Mounting Ears

TAIL LENGTH
1 = .200 [5.08]
2 = .570 [14.48]
3 = .750 [19.05]

TAIL TWIST
1 = Twisted
2 = Not Twisted

PLATING
50µ” Nickel Underplate

CONTACT	TAIL
10 = 10µ” Au	100µ” Sn
20 = 15µ” Au	100µ” Sn
30 = 30µ” Au	100µ” Sn
40 = 10µ” Au	5µ” Au
50 = 15µ” Au	5µ” Au
60 = 30µ” Au	5µ” Au

CONSULT FACTORY FOR CONNECTORS BUILT TO YOUR SPECIFICATION

3500 Series Card Edge Connector
.156” X .188” Contact Spacing

Specifications

Insulator Material: Glass filled polyester, type PBT, 94 V-O, UL Rated.
Contact Material: Phosphor Bronze Alloy
Contact Plating: Gold and/or Tin over .000050” Nickel, (See Contact Plating Options).
Current Rating: 5 amp at 30°C
Contact Resistance:
Contact to Daughter Card:
10 m Ω max.
Insulation Resistance:
5000 M Ω min.
Dielectric Withstand Voltage:
1800 V AC
Daughter Board Insertion Force:
16 oz max. per contact pair when tested with a .071” thick gage.
Daughter Board Withdrawal Force:
1 oz min. per contact pair when tested with a .054” thick gage.
Operating Temperature:
-54°C to +125°C

Features

- Extra large chamfered entry
- Conforms to Bell-core spec TR-TSY-00078
- Extended card scoops available
- Replaceable contacts
- Molded in polarization available between contact, or on contact position.
- De-population of contacts per customer specification.
- Available in selective gold plate at contact point
- Many other custom options available, including, but not limited to:
  - Single or Both Ends Open
  - Shorting Contacts

Recognized under the recognized component Program of Underwriters Laboratories, Inc.
File Numbers: E146967 and E176234

For drawings, technical data or samples, contact E.C.S. at (714) 895-6351

POS. / CONTACTS	A	B	C	D	E	F
06/12	1.844 [46.84]	1.532 [38.91]	1.263 [32.08]	1.100 [27.94]	0.780 [19.81]	0.996 [25.30]
10/20	2.468 [62.69]	2.158 [54.81]	1.877 [47.67]	1.724 [43.79]	1.404 [35.66]	1.620 [41.15]
15/30	3.248 [82.50]	2.938 [74.63]	2.667 [67.74]	2.504 [63.60]	2.184 [55.47]	2.400 [60.96]
18/36	3.716 [94.39]	3.406 [86.51]	3.135 [79.63]	2.972 [75.49]	2.652 [67.36]	2.868 [72.85]
22/44	4.340 [110.24]	4.030 [102.36]	3.759 [95.48]	3.596 [91.34]	3.276 [83.21]	3.492 [88.70]
28/56	5.276 [134.01]	4.968 [126.19]	4.695 [119.25]	4.532 [115.11]	4.212 [106.99]	4.428 [112.47]
30/60	5.588 [141.94]	5.278 [134.06]	5.007 [127.18]	4.844 [123.04]	4.524 [114.91]	4.740 [120.40]
40/80	7.148 [181.56]	6.830 [173.48]	6.567 [166.80]	6.404 [162.66]	6.084 [154.53]	6.300 [160.02]
43/86	7.616 [193.45]	7.306 [185.57]	7.035 [178.69]	6.872 [174.55]	6.552 [166.43]	6.768 [171.91]

For reference only, can go 1 through 43 positions.

Dimensions are in inch [mm]

MOUNTING STYLE

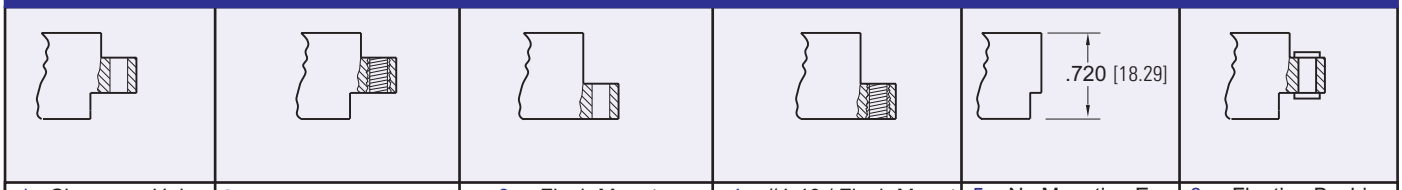

1= Clearance Hole	2 = #4-40 Threaded Insert	3 = Flush Mount	4 = #4-40 / Flush Mount	5 = No Mounting Ear	6 = Floating Bushing

ELECTRONIC CONNECTOR SERVICE INC. 11880 WESTERN AVE. STANTON, CA 90680 TOLL FREE (877) ECS-CONN TEL (714) 895-6351 FAX (714) 894-1858
WWW.ECSCONN.COM

.156” x .188” Contact Spacing, .045 [1.14] sq. Contact

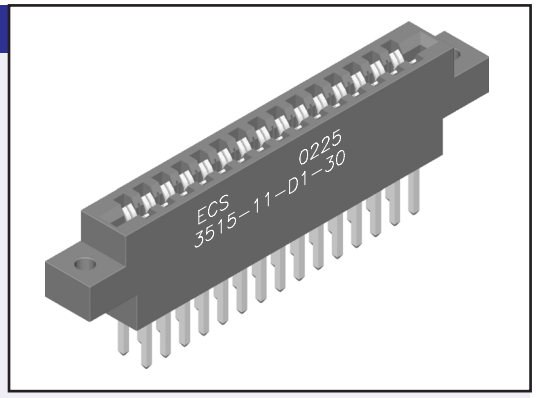

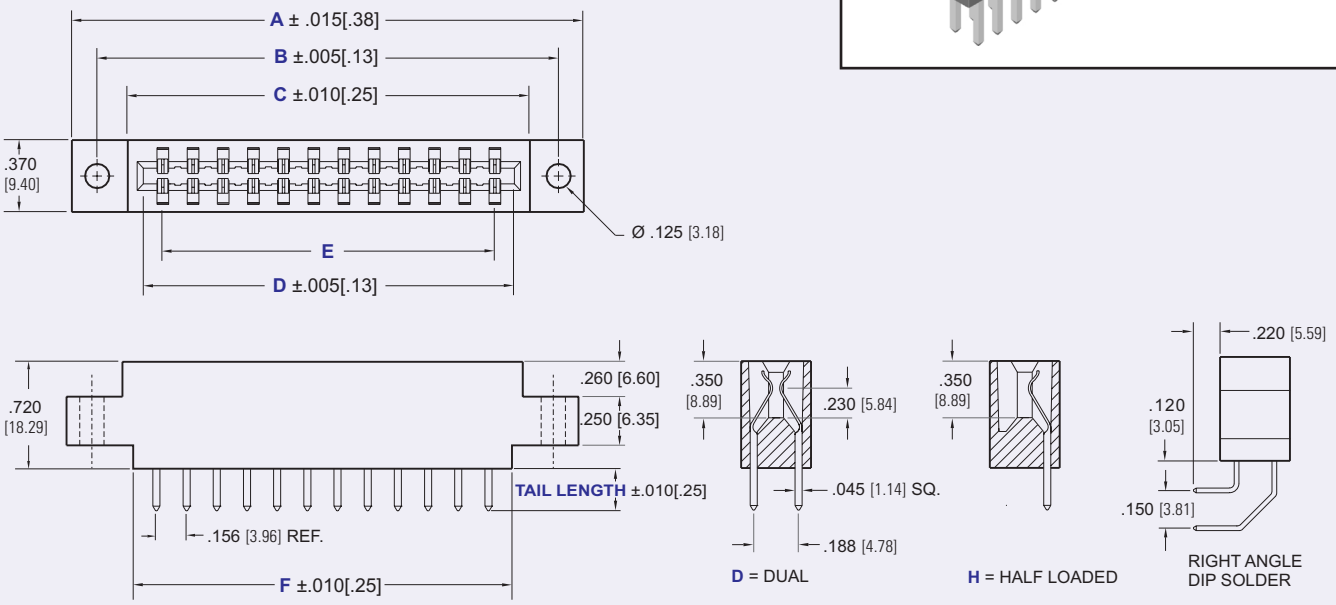

Dimensions are in inch [mm]

PART NUMBERING

35 XX — X X — X X — XX — XXX

SERIES CODE
.156 X .188 DIP Solder / Wire Wrap

NO. CONTACT PAIRS
01 - 43

TERMINATION TYPE
1 = Straight @ .045 SQ.
2 = Right Angle @ .045 SQ.

BODY STYLE
1 = Clearance Hole
2 = #4-40 Threaded Insert
3 = Flush Mount
4 = Flush Mount / #4-40 Threaded Insert
5 = No Mounting Ears
6 = Floating Bushing

READOUT
D = Dual
H = Half Loaded

TAIL LENGTH
1 = .250 [6.35] Dip Solder
2 = .570 [14.48] Dip Solder
3 = .750 [19.05] Dip Solder
4 = .220 [5.59] Right Angle

PLATING
50µ” Nickel Underplate

CONTACT	TAIL
10 = 10µ” Au	100µ” Sn
20 = 15µ” Au	100µ” Sn
30 = 30µ” Au	100µ” Sn
40 = 10µ” Au	5µ” Au
50 = 15µ” Au	5µ” Au
60 = 30µ” Au	5µ” Au

CUSTOM VARIATION
CONSULT FACTORY

CONSULT FACTORY FOR CONNECTORS BUILT TO YOUR SPECIFICATION

3600 Series Card Edge Connector
.150” X .188” Contact Spacing

Specifications

Insulator Material: Glass filled polyester, type PBT, 94 V-O, UL Rated.
Contact Material: Phosphor Bronze Alloy
Contact Plating: Gold and/or Tin over .000050” Nickel, (See Contact Plating Options).
Current Rating: 5 amp at 30°C
Contact Resistance:
Contact to Daughter Card:
10 m max.
Insulation Resistance:
5000 M min.
Dielectric Withstand Voltage:
1800 V AC
Daughter Board Insertion Force:
16 oz max. per contact pair when tested with a .071” thick gage.
Daughter Board Withdrawal Force:
1 oz min. per contact pair when tested with a .054” thick gage.
Operating Temperature:
-54°C to +125°C

Features

- Extra large chamfered entry
- Conforms to Bell-core spec TR-TSY-00078
- Extended card scoops available
- Replaceable contacts
- Molded in polarization available between contact, or on contact position.
- De-population of contacts per customer specification.
- Available in selective gold plate at contact point
- Many other custom options available, including, but not limited to:
  - Single or Both Ends Open
  - Shorting Contacts

Recognized under the recognized component Program of Underwriters Laboratories, Inc.
File Numbers: E146967 and E176234

For drawings, technical data or samples, contact E.C.S. at (714) 895-6351

POS. / CONTACTS	A	B	C	D	E	F
10/20	1.404 [35.66]	1.724 [43.79]	1.848 [46.94]	2.158 [54.81]	2.408 [61.16]	1.604 [40.74]
15/30	2.184 [55.47]	2.506 [63.65]	2.625 [66.67]	2.938 [74.63]	3.188 [60.98]	2.434 [61.82]
18/36	2.652 [67.36]	2.974 [75.54]	3.093 [78.56]	3.406 [86.51]	3.656 [92.86]	2.902 [73.71]
22/44	3.276 [83.21]	3.596 [91.34]	3.720 [94.49]	4.030 [102.36]	4.280 [108.71]	3.476 [88.29]
25/50	3.744 [95.09]	4.064 [103.23]	4.188 [106.38]	4.498 [114.25]	4.748 [120.60]	3.944 [100.18]
28/56	4.212 [106.98]	4.532 [115.11]	4.656 [118.26]	4.966 [126.14]	5.216 [132.49]	4.412 [112.06]
30/60	4.524 [114.91]	4.844 [123.04]	4.968 [126.19]	5.278 [134.06]	5.528 [140.41]	4.724 [119.99]
31/62	4.680 [118.87]	5.000 [127.00]	5.124 [130.15]	5.434 [138.02]	5.684 [144.37]	4.880 [123.95]
36/72	5.460 [138.68]	5.780 [146.81]	5.904 [149.96]	6.214 [157.84]	6.464 [164.19]	5.660 [143.76]
43/86	6.552 [166.42]	6.872 [174.55]	6.996 [177.69]	7.306 [185.57]	7.556 [191.92]	6.752 [171.50]
50/100	7.644 [194.16]	7.964 [202.28]	8.088 [205.43]	8.398 [213.31]	8.648 [219.66]	7.844 [199.24]

For reference only, can go 1 through 50 positions.

Dimensions are in inch [mm]

MOUNTING STYLE

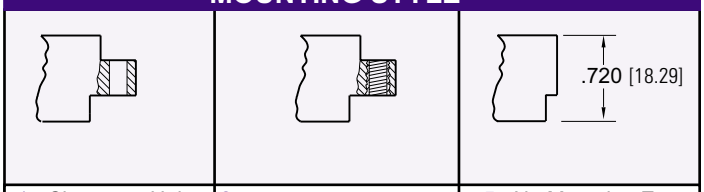

1= Clearance Hole	2= #4-40/ Threaded Insert	5= No Mounting Ear

.150” x .188” Contact Spacing

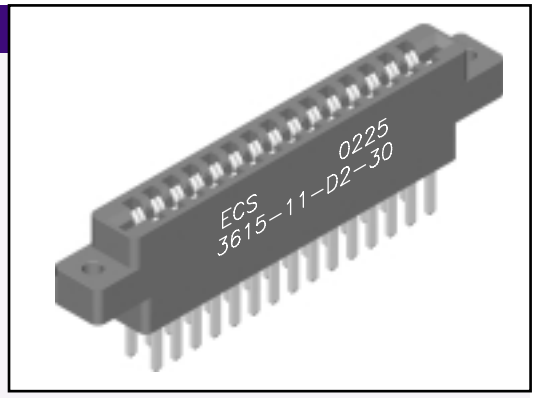

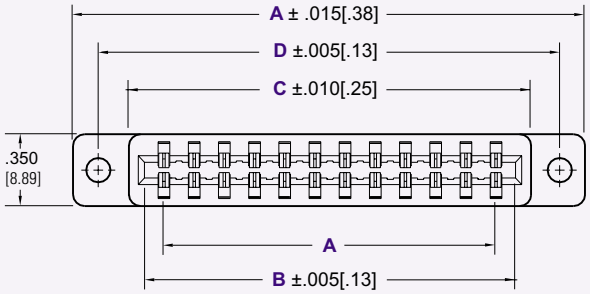

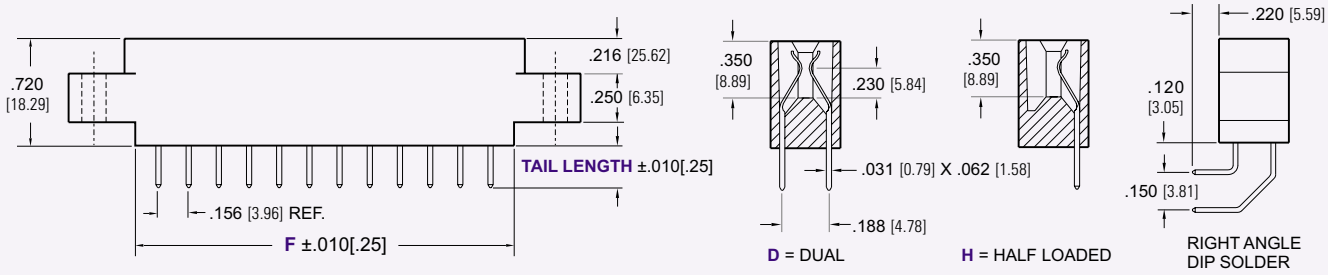

Dimensions are in inch [mm]

PART NUMBERING

36 XX — XX — XX — XX — XXX

SERIES CODE
.156 X .200 Dip Solder / Wire Wrap

NO. CONTACT PAIRS
01 - 43

TERMINATION TYPE
1 = Straight
2 = Right Angle

MOUNTING STYLE
1 = Clearance Hole
2 = #4-40 Threaded Insert
5 = No Mounting Ear

READ OUT
D = Dual
H = Half Loaded

TAIL LENGTH
1 = .190 Dip Solder
2 = .560 Wire Wrap
3 = .100 Right Angle
4 = .180 Right Angle
5 = .250 Right Angle

PLATING
50µ” Nickel Underplate

CONTACT	TAIL
10 = 10µ” Au	100µ” Sn
20 = 15µ” Au	100µ” Sn
30 = 30µ” Au	100µ” Sn
40 = 10µ” Au	5µ” Au
50 = 15µ” Au	5µ” Au
60 = 30µ” Au	5µ” Au

CUSTOM VARIATION
CONSULT FACTORY

CONSULT FACTORY FOR CONNECTORS BUILT TO YOUR SPECIFICATION

3200 Series Card Edge Connector
.156” X .200” Contact Spacing, Bellow Contacts

Specifications

Insulator Material: Glass filled polyester, type PBT, 94 V-O, UL Rated.
Contact Material: Phosphor Bronze Alloy
Contact Plating: Gold and/or Tin over .000050” Nickel, (See Contact Plating Options).
Current Rating: 5 amp at 30°C
Contact Resistance:
Contact to Daughter Card:
10 m Ω max.
Insulation Resistance:
5000 M Ω min.
Dielectric Withstand Voltage:
1800 V AC
Daughter Board Insertion Force:
16 oz max. per contact pair when tested with a .071” thick gage.
Daughter Board Withdrawal Force:
1 oz min. per contact pair when tested with a .054” thick gage.
Operating Temperature:
-54°C to +125°C

Features

- Extra large chamfer entry
- Conforms to Bell-core spec TR-TSY-00078
- Extended card scoops available
- Replaceable contacts
- Molded in polarization available between contact, or on contact position.
- De-population of contacts per customer specification.
- Available in selective gold plate at contact point
- Many other custom options available, including, but not limited to:

  - Single or Both Ends Open

Recognized under the recognized component Program of Underwriters Laboratories, Inc.
File Numbers: E146967 and E176234

For drawings, technical data or samples, contact E.C.S. at (714) 895-6351

POS. / CONTACTS	A	B	C	D	E	F
06/12	0.780 [19.81]	1.102 [27.99]	1.221 [31.01]	1.534 [38.96]	1.784 [45.31]	1.030 [26.16]
08/16	1.092 [27.74]	1.414 [35.92]	1.533 [38.94]	1.846 [46.89]	2.096 [53.24]	1.342 [34.09]
10/20	1.404 [35.66]	1.726 [43.84]	1.845 [46.86]	2.158 [54.81]	2.408 [61.16]	1.654 [42.01]
12/24	1.716 [43.59]	2.038 [51.76]	2.157 [54.79]	2.470 [62.74]	2.720 [69.09]	1.966 [49.94]
15/30	2.184 [55.47]	2.506 [63.65]	2.625 [66.67]	2.938 [74.63]	3.188 [60.98]	2.434 [61.82]
18/36	2.652 [67.36]	2.974 [75.54]	3.093 [78.56]	3.406 [86.51]	3.656 [92.86]	2.902 [73.71]
20/40	2.964 [75.29]	3.286 [83.46]	3.405 [86.49]	3.718 [94.44]	3.968 [100.79]	3.214 [81.64]
22/44	3.276 [83.21]	3.598 [91.39]	3.717 [94.41]	4.030 [102.36]	4.280 [108.71]	3.526 [89.56]
24/48	3.588 [91.14]	3.910 [99.31]	4.029 [102.34]	4.342 [110.29]	4.592 [116.64]	3.838 [97.49]
25/50	3.744 [95.10]	4.066 [103.27]	4.185 [106.30]	4.498 [114.25]	4.748 [120.60]	3.994 [101.45]
28/56	4.212 [106.98]	4.534 [115.16]	4.653 [118.19]	4.966 [126.14]	5.216 [132.49]	4.462 [113.33]
30/60	4.524 [114.91]	4.846 [123.09]	4.965 [126.11]	5.278 [134.06]	5.528 [140.41]	4.774 [121.26]
31/62	4.680 [118.87]	5.002 [127.05]	5.121 [130.07]	5.434 [138.02]	5.684 [144.37]	4.930 [125.22]
36/72	5.460 [138.68]	5.782 [146.86]	5.901 [149.89]	6.214 [157.84]	6.464 [164.19]	5.710 [145.03]
40/80	6.084 [154.53]	6.406 [162.20]	6.525 [165.73]	6.838 [173.68]	7.088 [180.03]	6.334 [160.88]
43/86	6.552 [166.42]	6.874 [174.75]	6.993 [177.80]	7.306 [185.47]	7.556 [193.04]	6.802 [172.77]

For reference only, can go 1 through 43 positions

Dimensions are in inch [mm]

MOUNTING STYLE

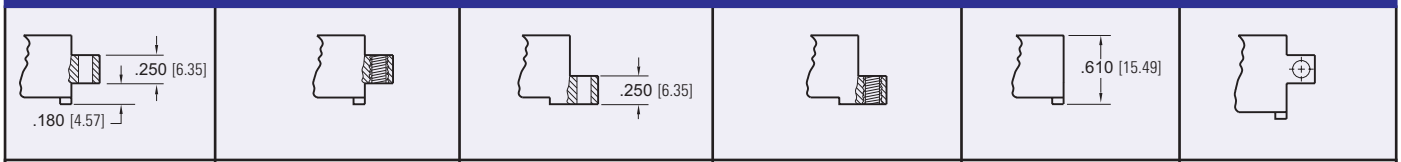

1 = Clearance Hole	2 = #4-40 Threaded Insert	3 = Flush Mount	4 = #4-40 Threaded Insert	5 = No Mounting Ear	6 = Side Mounting

ELECTRONIC CONNECTOR SERVICE INC. 11880 WESTERN AVE. STANTON, CA 90680 TOLL FREE (877) ECS-CONN TEL (714) 895-6351 FAX (714) 894-1858
WWW.ECSCONN.COM

.156” x .200” Contact Spacing, Bellow Contacts

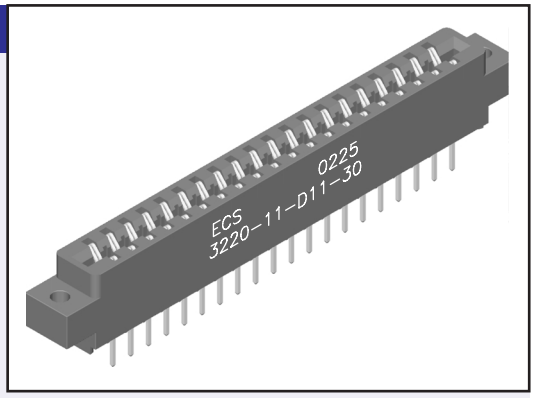

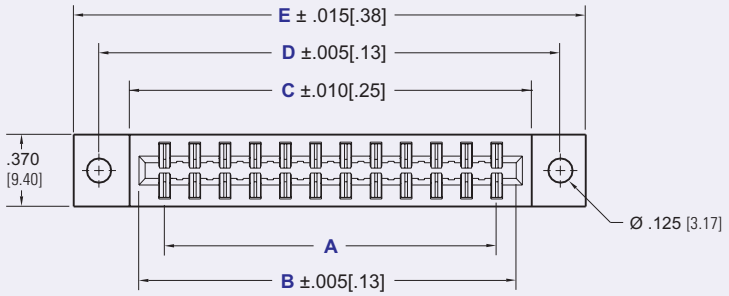

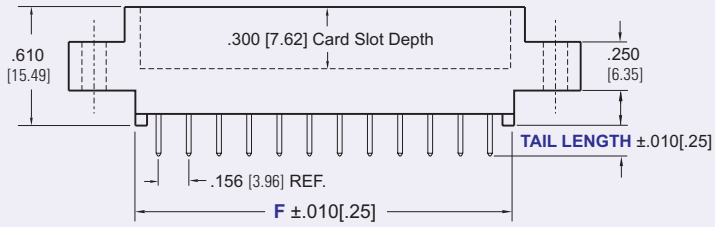

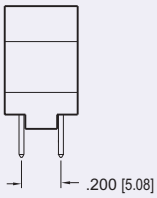

Dimensions are in inch [mm]

TERMINATION TYPE

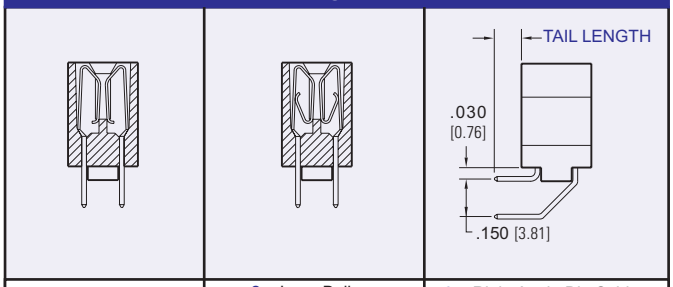

1 =Hair Pin Bellows	2 = Loop Bellows	3 = Right Angle Dip Solder

READOUT

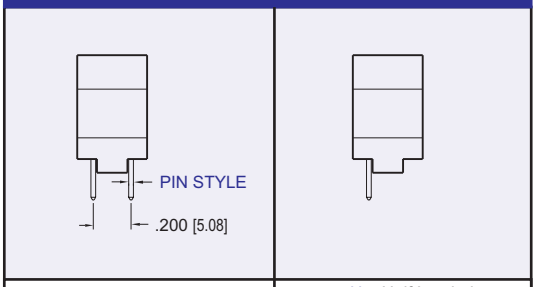

D = Dual	H = Half Loaded

PART NUMBERING

32 XX — X X — X X X — XX — XXX

SERIES CODE
.156” X .200” Dip Solder / Wire Wrap

NO. CONTACT PAIRS
06 - 43

TERMINATION TYPE
1 = Hairpin Bellows
2 = Loop Bellows
3 = Right Angle Bellows

MOUNTING STYLE
1 = Clearance Hole
2 = #4-40 Threaded Insert
3 = Flush Mount
4 = Flush Mount / #4-40 Insert
5 = No Mounting Ear
6 = Side Mounting

READOUT
D = Dual
H = Half Loaded

PIN STYLE
1 = .025 SQ.
2 = .026 DIA.

TAIL LENGTH
1 = .190 [4.83] Dip Solder
2 = .560 [14.22] Wire Wrap
3 = .100 [2.54] Right Angle
4 = .180 [4.57] Right Angle
5 = .250 [6.35] Right Angle

PLATING
50µ” Nickel Underplate

CONTACT	TAIL
10 = 10µ” Au	100µ” Sn
20 = 15µ” Au	100µ” Sn
30 = 30µ” Au	100µ” Sn
40 = 10µ” Au	5µ” Au
50 = 15µ” Au	5µ” Au
60 = 30µ” Au	5µ” Au

CUSTOM VARIATION
CONSULT FACTORY

CONSULT FACTORY FOR CONNECTORS BUILT TO YOUR SPECIFICATION

DIN 41612 SPECIFICATIONS

INTRODUCTION

ECS DIN 41612 Connectors offer the user a wide variety of options to choose from with 16 to 160 signal contacts available in a two piece connector system. ECS connectors are compatible with and conform to the specifications of DIN 41612 and IEC 603-2. The DIN 41612 connector system is one of the most widely used connector systems in the world.

ECS DIN 41612 connectors are offered in a variety of termination methods, including Press Fit, Dip Solder, and Wire Wrap. For Mid-Plane applications, extended tail lengths and a large selection of rear mount shrouds are also available. With an easy to use part creation system, the user can define the specific connector that is required for the application. For special applications ECS can offer many options including selective pin loading, special plating, customer part coding, and mold configurations. Please contact Customer Service to discuss your special requirements.

DIN 41612 SIZE	B	Q	C	R	CD	RD	E	TE	M
Orientation	Standard	Inverse	Standard	Inverse	Standard	Inverse	Standard	Inverse	Standard
Max. Number of Contacts	64		96		128		160		78
Contact Row Designation	ab	ab	abc	abc	abcd	abcd	abcde	abcde	abc
Temperature Range	-65°C to +125°C								
Insulator Material	PBT 30% Glass Filled UL 94 V-0 Rated								
Contact Material: Socket Connectors	Phosphor Bronze Alloy								
Contact Material: Pin Connectors	Copper Alloy								
Contact Plating / Performance Per DIN 41612, Part 5 — Level 1	≥500 Mating Cycles								
Contact Plating / Performance Per DIN 41612, Part 5 — Level 2	≥400 Mating Cycles								
Contact Plating / Performance Per DIN 41612, Part 5 — Level 3	≥ 50 Mating Cycles								
Contact Resistance	≤ 20m Ω								
Insulation Resistance	≥ 10^{12} m Ω at 100 VDC								
Dielectric Strength	≤1000 VDC								
Current Range at Ambient Temp. Of +20C	3 Amp								
Current Range at Ambient Temp. Of +70C	2 Amp								
Current Range at Ambient Temp. Of +100C	1 Amp								
Insertion Force (N)	≤60		≤90		≤100		≤100		≤70
Withdrawal Forces Per Contact (N)	≥.15								

CONNECTOR PERFORMANCE LEVELS PER DIN 41612, PART 5		
Level 1 (per DIN 41612 Part 5) 500 mating cycles 21 Days SO_2 gas test 250 mating Cycles Measurement of contact resistance, followed by visual inspection. Level 1 connectors show no abrasion of the contact finish.	**Level 2 (per DIN 41612 Part 5)** 400 mating cycles 4 Days SO_2 gas test 200 mating Cycles Measurement of contact resistance, followed by visual inspection. Level 2 connectors show no abrasion of the contact finish.	**Level 3 (per DIN 41612 Part 5)** 50 mating cycles Visual Inspection (no gas test) Measurement of contact resistance, followed by visual inspection. Level 3 connectors show no abrasion of the contact finish.

APPROVALS

Recognized under the recognized component Program of Underwriters Laboratories, Inc.
File Numbers: E146967 and E176234

ISO 9002 registered

Bellcore GRE 1217 CORE
Connectors are available that meet the requirements of Bellcore GRE-1217-CORE. Please consult factory for ordering information.

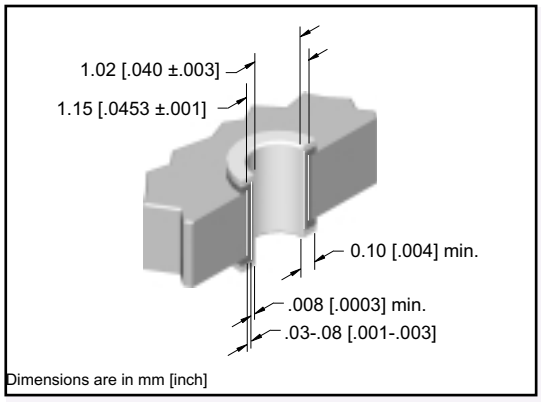

PRESS FIT CONNECTORS

Press fit connectors are available in all DIN 41612 configurations, with four different tail lengths to choose from. Standard connectors Types B, C, CD, E, and M are all flat plate press fit. Inverse connectors Types Q, R, RD, and TE require press in tools. Standard tool numbers are listed on page C-48.

DRILLED HOLE DIAMETER	PLATING THICKNESS	HOLE DIAMETER	PAD DIAMETER	INSERTION FORCE PER PIN	WITHDRAWAL FORCE PER PIN
1.15 [.0453]	Copper .03-.08 [.001-.003] Tin / Lead .008 [.0003]min.	After Plating .040±.003	1.65 [.065]	40 lbs. Max.	10 lbs. Min.

EM/LB & LM/EB CONTACTS

Early Make/Late Break and Late Make/Early Break contacts are available in any position and all rows. For press fit connectors, a programmable seating tool is used to determine the location(s). Solder and Right angle connectors are pre-loaded at the factory. Please consult Customer Service for EM/LB and LM/EB contact loading and press in tools.

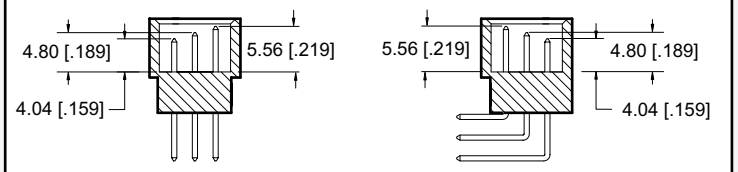

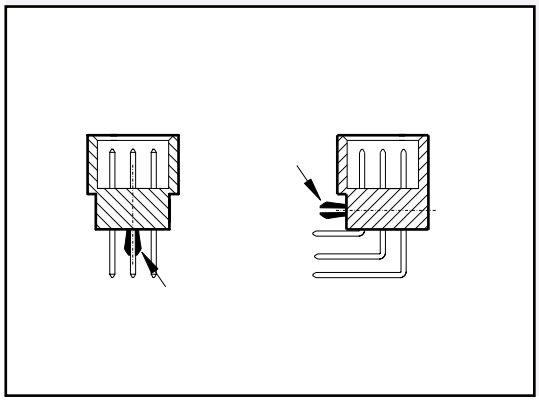

MOUNTING CLIPS

For straight solder and right angle versions, connectors can be supplied with pre-installed mounting clips. The mounting clips, designed for 1.6mm thick PCB's provide an effective retention method to hold the connector in the PCB during the soldering process. See part number coding for ordering information.

DIN 41612
Type B, B/2, B/3 Female Connectors

Type B, 64 Positions

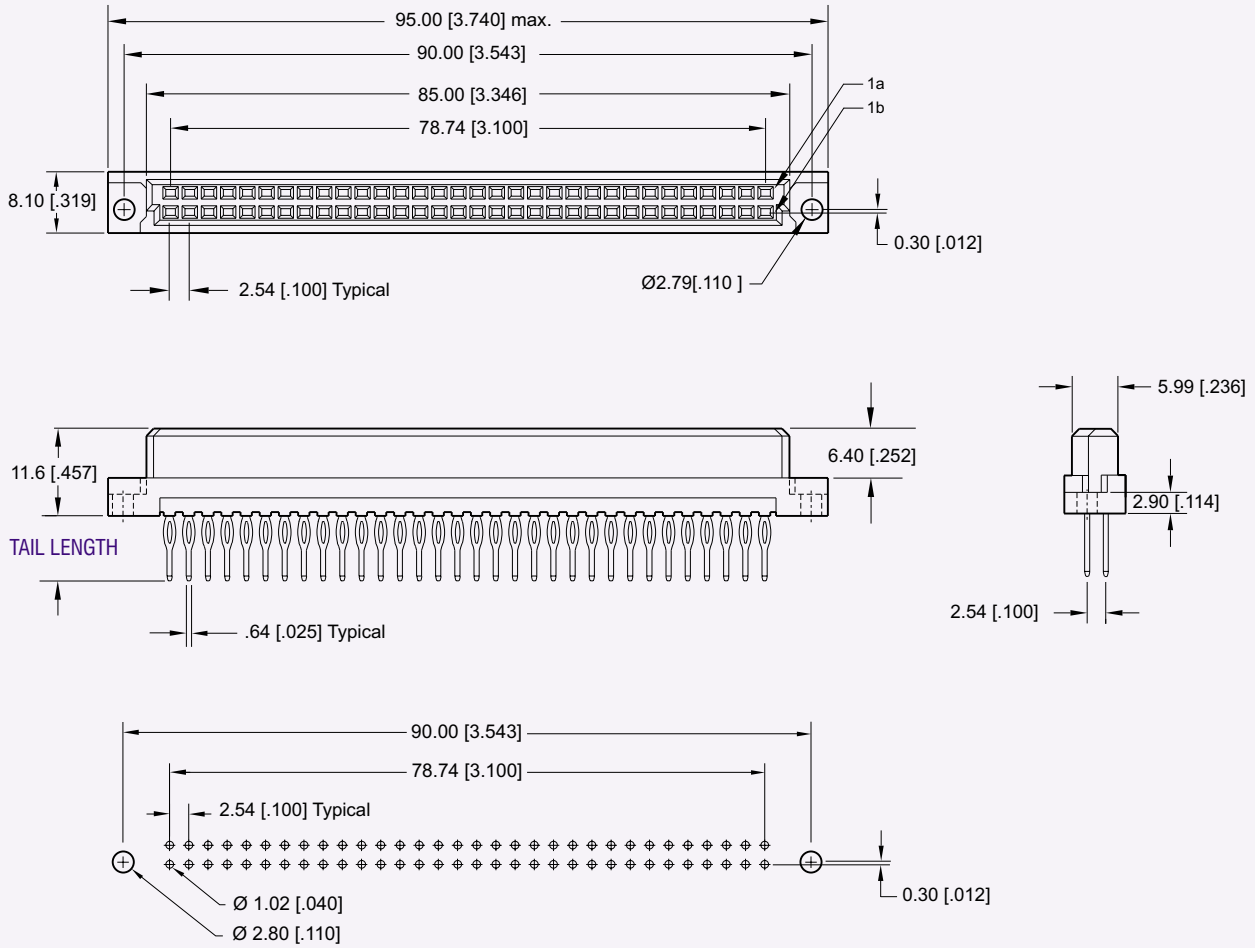

Recommended P. C. Board Layout

Dimensions are in mm [inches]

TAIL LENGTH OPTIONS

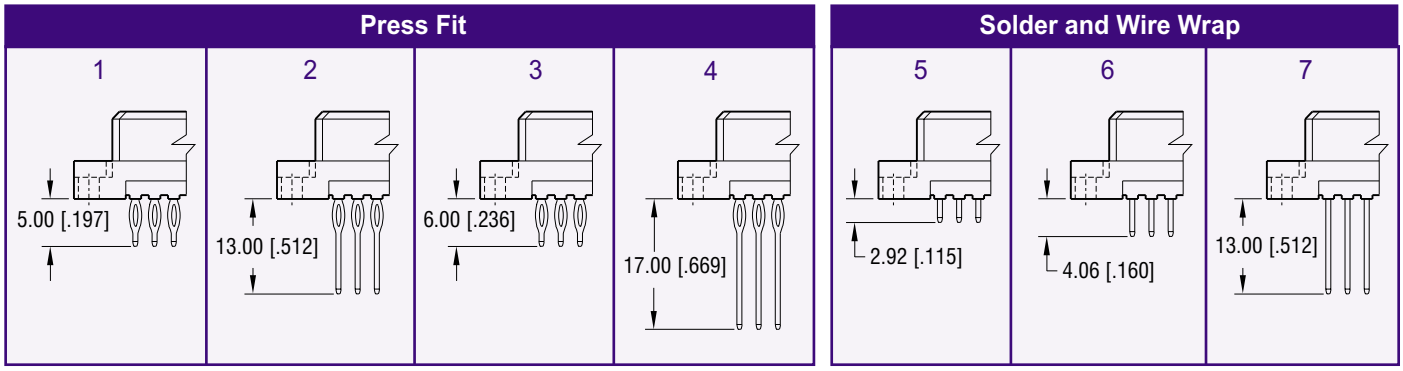

Type B/2, 32 Positions

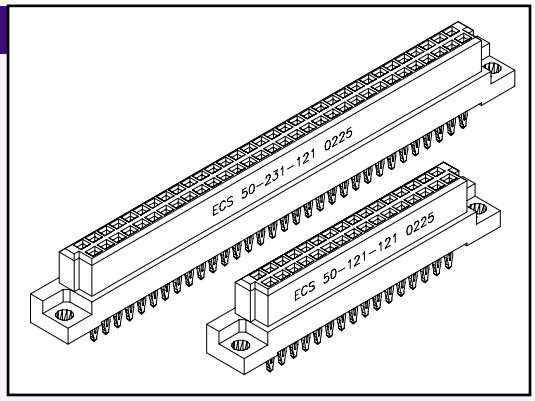

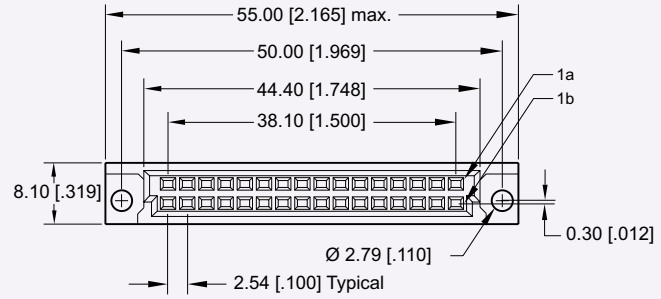

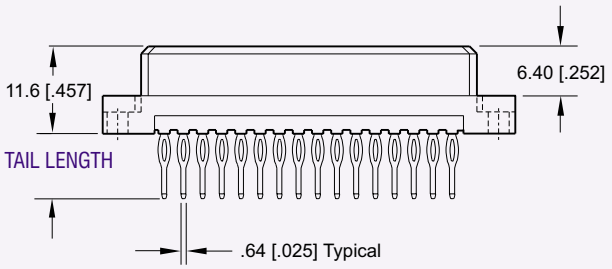

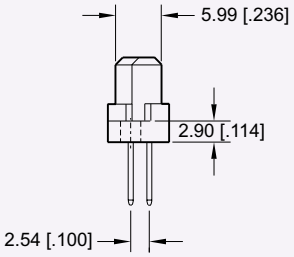

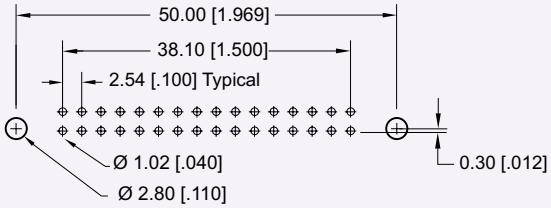

Recommended P. C. Board Layout

Dimensions are in mm [inches]

PART NUMBERING

50 — XXX — XXX — XX

MC = Mounting Clip
Blank = No Mounting Clip

SERIES CODE

Type B, B/2, B/3 Female DIN

BODY STYLE

0 = B/3 (20 positions) not shown
1 = B/2 (32 positions)
2 = B (64 positions)

NO. OF CONTACTS

0 = 20
1 = 16
2 = 32
3 = 64

CONTACT LOADING

1 = Row A and B fully populated
2 = Row A fully populated, Row B not populated
3 = Row B fully populated, Row A not populated
Consult Factory for other Loading Options

TAIL PLATING

1 = Tin Lead
2 = Gold flash (.200" from pin tip)
3 = Gold plate 30µ" (.200" from pin tip)
4 = Gold plate 15µ" (.200" from pin tip)

MATING AREA PLATING

1 = Class 1
2 = Class 2
3 = Class 3

TAIL LENGTH

1 = 5.00 [.197] Press-Fit
2 = 13.00 [.512] Press-Fit
3 = 6.00 [.236] Press-Fit
4 = 17.00 [.669] Press-Fit
5 = 2.92 [.115] Dip Solder
6 = 4.06 [.160] Dip Solder
7 = 13.00 [.512] Dip Solder Wire Wrap

CONSULT FACTORY FOR CONNECTORS BUILT TO YOUR DESIGN

DIN 41612
Type B, B/2 Male Connectors

Type B, 64 Positions

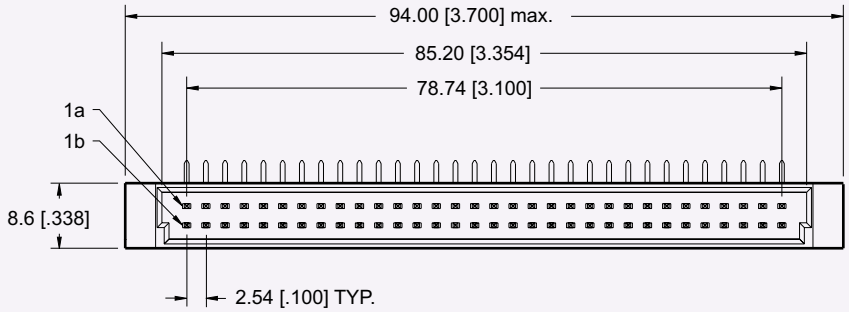

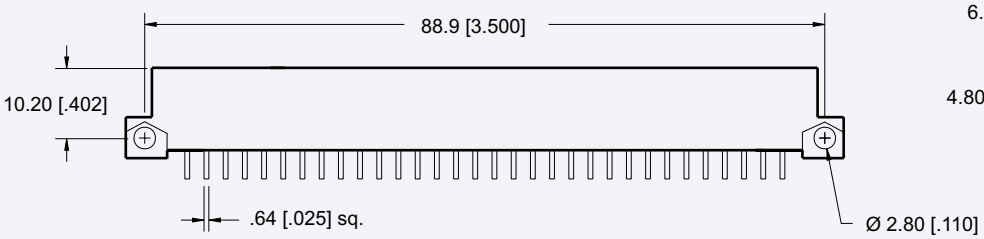

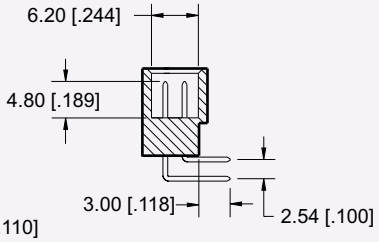

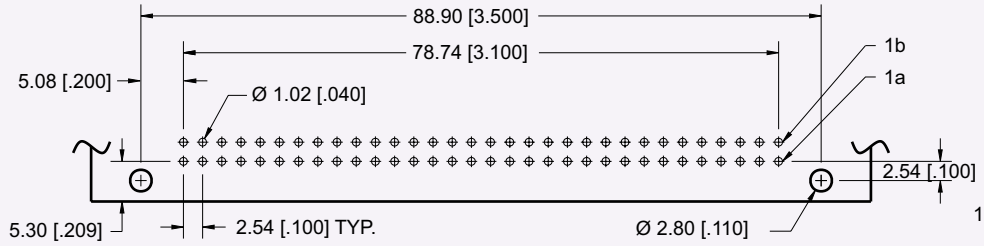

Recommended P. C. Board Layout

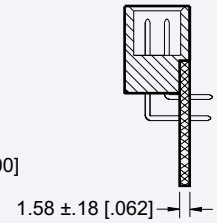

SIDE VIEW
WITH CARD

Dimensions are in mm [inches]

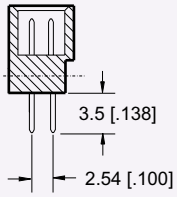

Straight Tail: -500 Option

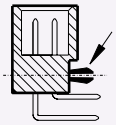

Mounting Clips: -MC Option

Type B/2, 32 Positions

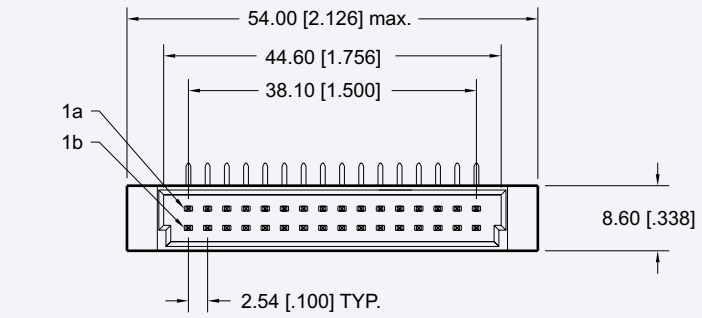

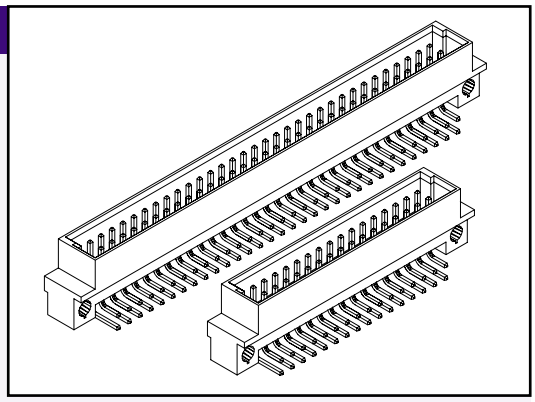

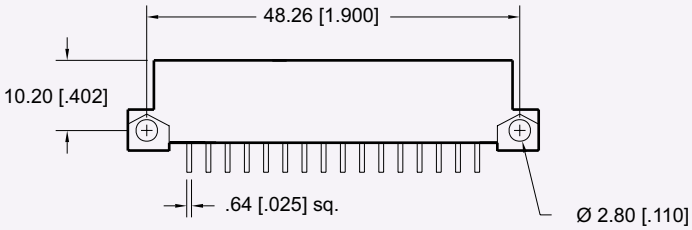

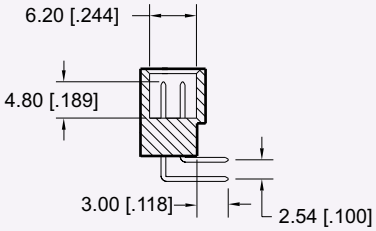

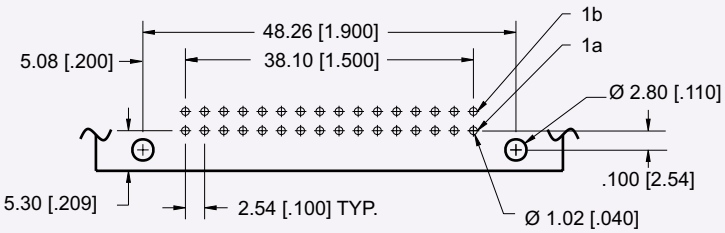

Recommended P. C. Board Layout

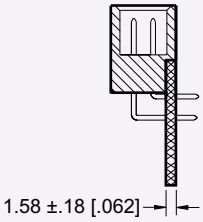

SIDE VIEW
WITH CARD

Dimensions are in mm [inches]

PART NUMBERING

60 — XXX — X8XX — XXX

SERIES CODE
DIN 41612 Type B, B/2 Male

BODY STYLE
1 = B/2 (32 positions)
2 = B (64 positions)

NO. OF CONTACTS
1 = 16
2 = 32
3 = 64

CONTACT LOADING
1 = Row A and B fully populated
2 = Row A fully populated, Row B not populated
3 = Row B fully populated, Row A not populated
Consult Factory for other Loading Options

EMLB/LMEB CONTACTS
2 = Standard Pin Loading
1 = EMLB / LMEB Contacts Required
(Consult Factory for EMLB / LMEB Contact Locations)

MATING AREA PLATING
1 = Class 1
2 = Class 2
3 = Class 3

TAIL PLATING
1 = Tin Lead

Blank = No Mounting Clip
MC = Mounting Clip
500 = Straight Tail

CONSULT FACTORY FOR CONNECTORS BUILT TO YOUR DESIGN

DIN 41612
Type Q, Q/2, Q/3 Male Connectors

Type Q, 64 Positions

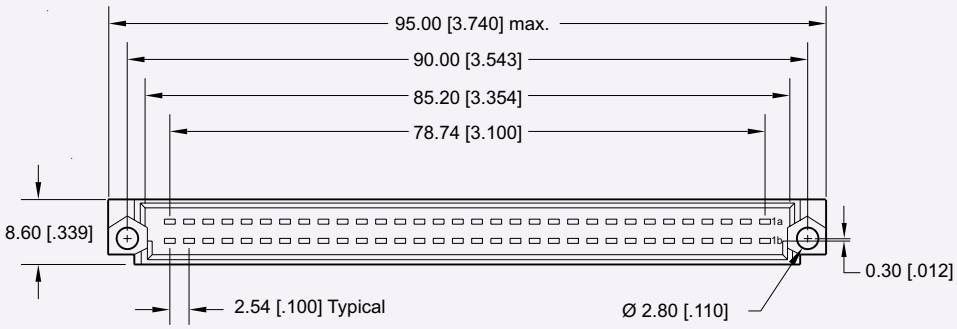

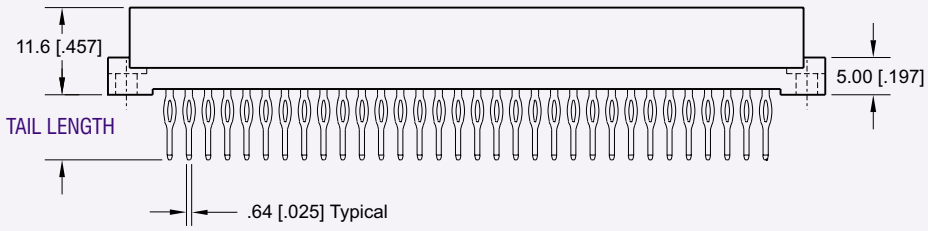

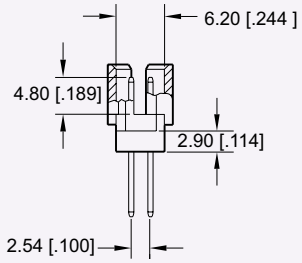

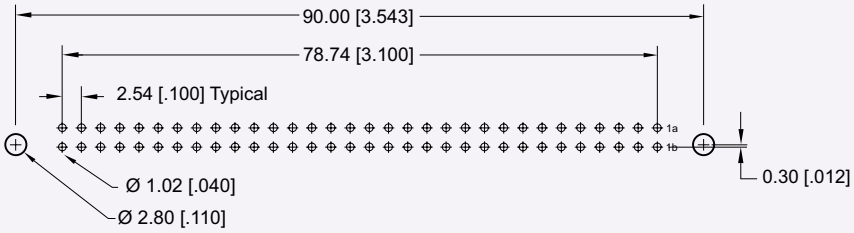

Recommended P. C. Board Layout

Dimensions are in mm [inches]

TAIL LENGTH OPTIONS

Press Fit				Solder and Wire Wrap		
1	2	3	4	5	6	7

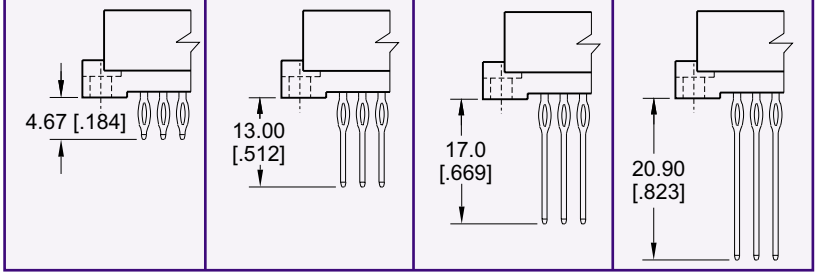

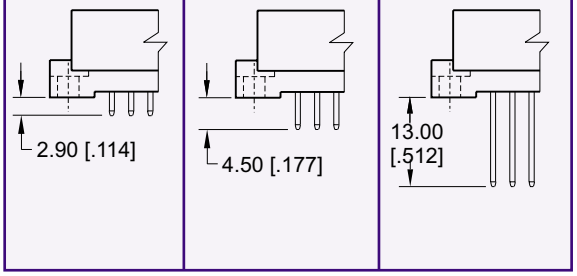

Type Q/2, 32 Positions

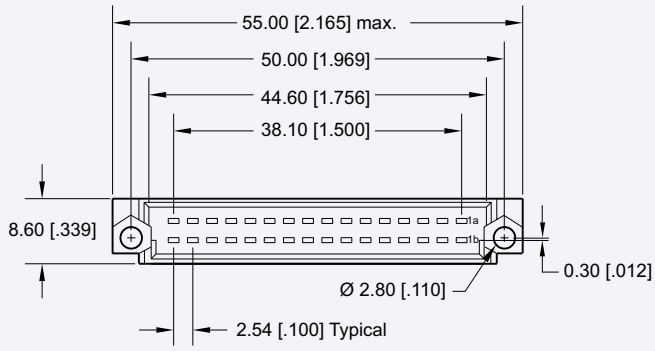

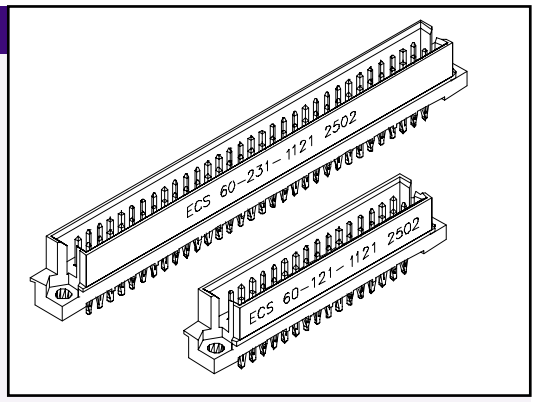

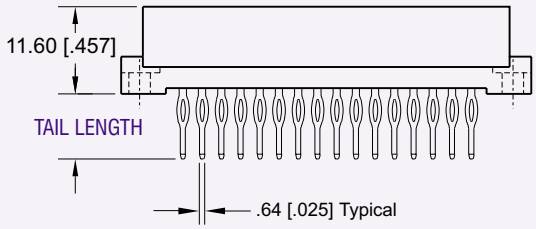

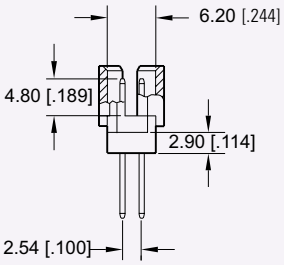

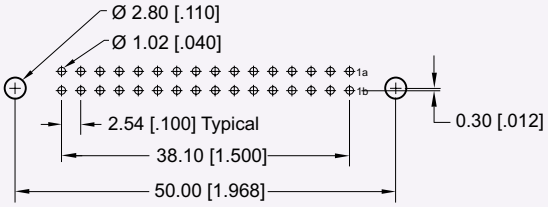

Recommended P. C. Board Layout

Dimensions are in mm [inches]

PART NUMBERING

60 — XXX — XXXX — XX

SERIES CODE
DIN 41612 Type Q, Q/2, Q/3 Male

BODY STYLE
0 = Q/3 (20 positions) not shown
1 = Q/2 (32 positions)
2 = Q (64 positions)

NUMBER OF CONTACTS
0 = 20
1 = 16
2 = 32
3 = 64

CONTACT LOADING
1 = Row A and B fully populated
2 = Row A fully populated, Row B not populated
3 = Row B fully populated, Row A not populated
Consult Factory for other Loading Options

Note: Press Fit Connectors required a press in tool.
See page C-48 for Press In Tool information.

CONTACT TYPE
1 = For all Press Fit Connectors
(Consult Factory if EM/LB Contact Required)
1 = Solder Version Requiring EM/LB Contacts
(Consult Factory)
2 = Solder Versions Standard Contacts

TAIL LENGTH
1 = 4.67 [.184] Press-Fit
2 = 13.00 [.512] Press-Fit
3 = 17.00 [.669] Press-Fit
4 = 20.90 [.823] Press-Fit
5 = 2.90 [.114] Dip Solder
6 = 4.50 [.177] Dip Solder
7 = 13.00 [.512] Dip Solder Wire Wrap

MATING AREA PLATING
1 = Class 1
2 = Class 2
3 = Class 3

TAIL PLATING
1 = Tin Lead
2 = Gold flash (.200" from pin tip)
3 = Gold plate 30µ" (.200" from pin tip)
4 = Gold plate 15µ" (.200" from pin tip)

MC = Mounting Clip
Blank = No Mounting Clip

CONSULT FACTORY FOR CONNECTORS BUILT TO YOUR DESIGN

DIN 41612
Type Q, Q/2 Female Connectors

Type Q, 64 Positions

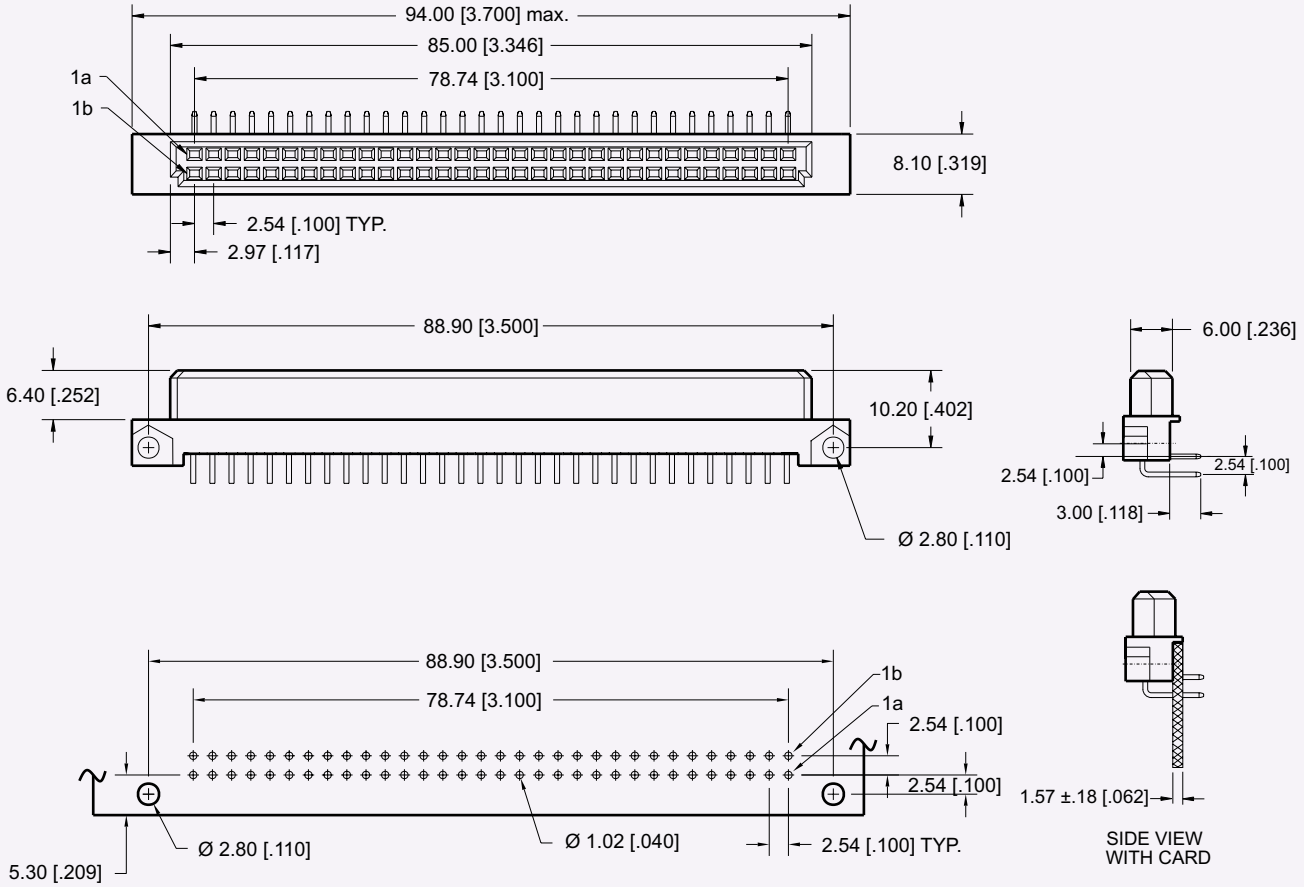

Recommended P. C. Board Layout

Dimensions are in mm [inches]

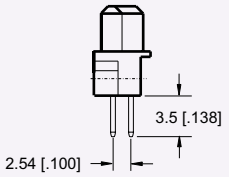

Straight Tail: -500 Option

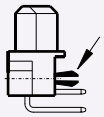

Mounting Clips: -MC Option

Type Q/2, 32 Positions

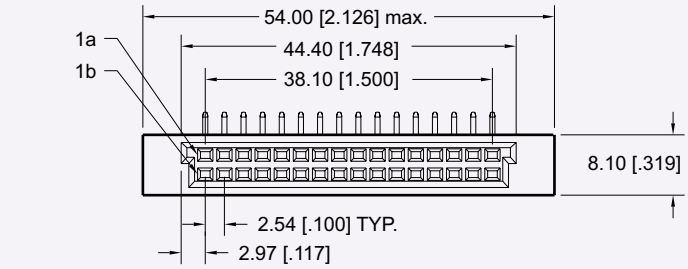

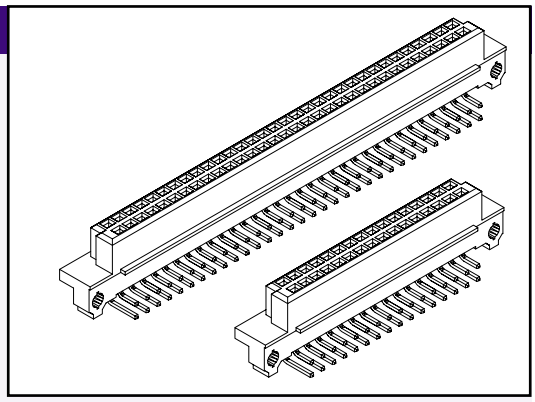

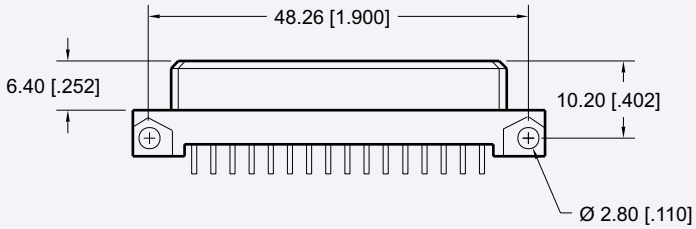

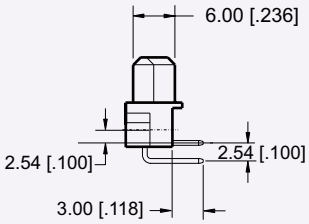

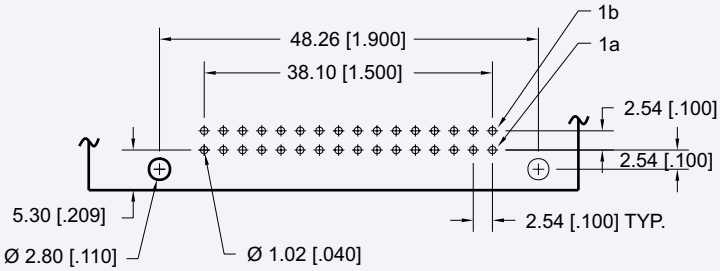

Recommended P. C. Board Layout

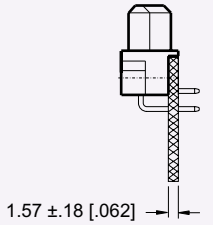

SIDE VIEW
WITH CARD

Dimensions are in mm [inches]

PART NUMBERING

50 — XXX — 8XX — XXX

SERIES CODE
DIN 41612 Female Type Q, Q/2

BODY STYLE
1 = Q/2 (32 positions)
2 = Q (64 positions)

NUMBER OF CONTACTS
1 = 16
2 = 32
3 = 64

CONTACT LOADING
1 = Row A and B fully populated
2 = Row A fully populated, Row B not populated
3 = Row B fully populated, Row A not populated
Consult Factory for other Loading Options

TAIL PLATING
1 = Tin Lead

MATING AREA PLATING
1 = Class 1
2 = Class 2
3 = Class 3

MC = Mounting Clips
Blank = No Mounting Clip
500 = Straight Tail

CONSULT FACTORY FOR CONNECTORS BUILT TO YOUR DESIGN

DIN 41612
Type C, C/2, C/3 and C Extended Connectors

Type C (96 Positions), C Extended (120 and 150 Positions)

Dim.	96 Positions	120 Positions	150 Positions
A	78.74 [3.100]	99.06 [3.900]	124.46 [4.900]
B	85.00 [3.347]	105.33 [4.147]	130.73 [5.147]
C	90.00 [3.543]	110.31 [4.343]	135.71 [5.343]
D	95.00 [3.740]	115.32 [4.540]	140.72 [5.540]

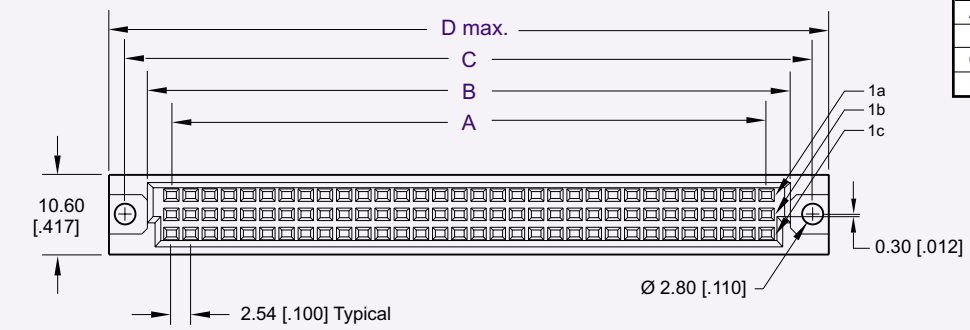

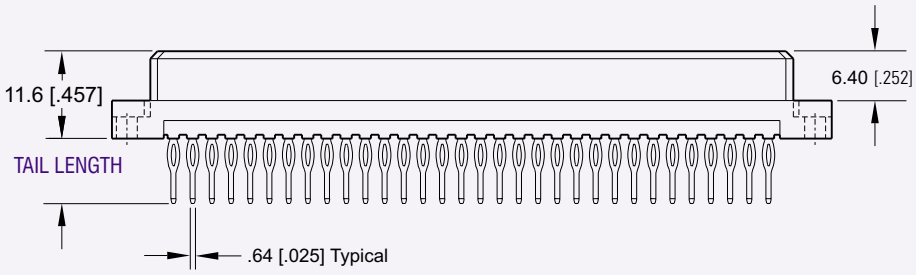

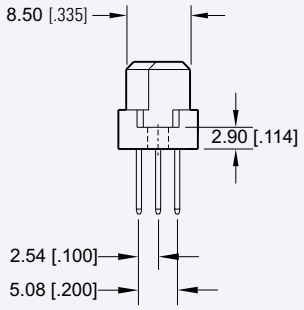

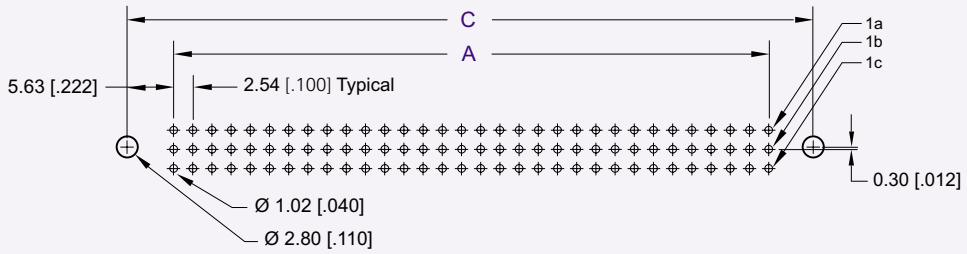

Recommended P. C. Board Layout

Dimensions are in mm [inches]

TAIL LENGTH OPTIONS

Press Fit

1

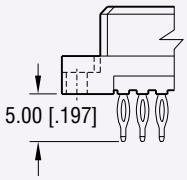

2

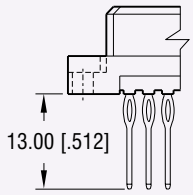

3

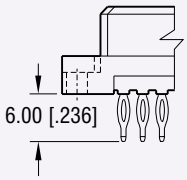

4

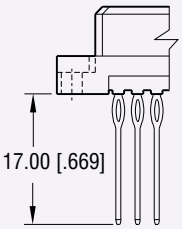

Solder and Wire Wrap

5

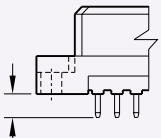

6

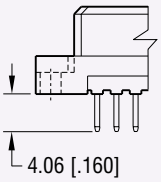

7

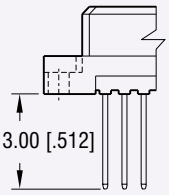

Type C/2, 48 Positions

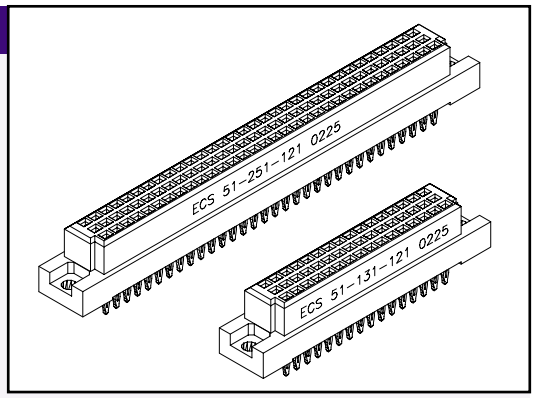

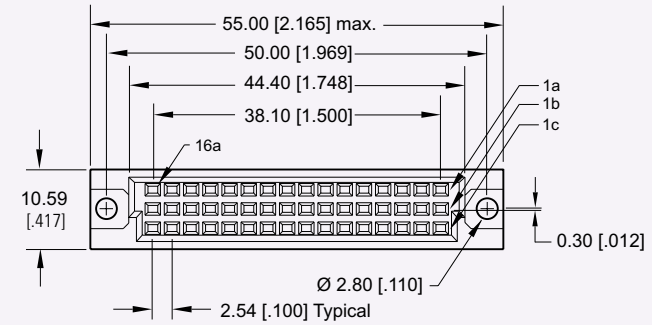

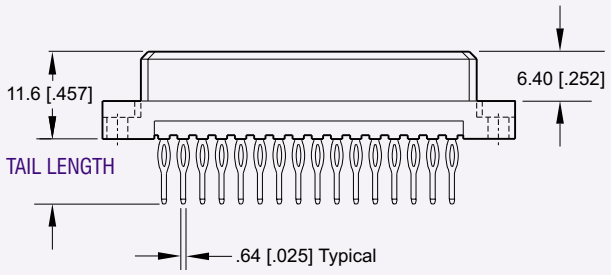

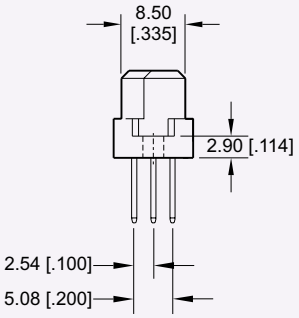

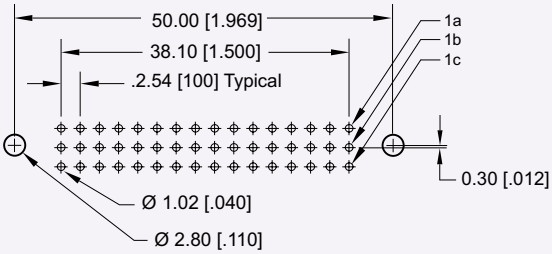

Recommended P. C. Board Layout

Dimensions are in mm [inches]

PART NUMBERING

51 — XXX — XXX — XX

SERIES CODE
DIN 41612 Type C, C/2 and C Extended Female

BODY STYLE
0 = C/3 (30 positions) not shown
1 = C/2 (48 positions)
2 = C (96 positions)
3 = C Extended (150 positions)
4 = C Extended (120 positions)

NUMBER OF CONTACTS
0 = 30
1 = 16
2 = 32
3 = 48
4 = 64
5 = 96
6 = 150
7 = 120

CONTACT LOADING
1 = Row A, B, and C fully populated
2 = Row A and B fully populated, Row C not populated
3 = Row A and C fully populated, Row B not populated
4 = Row B and C fully populated, Row A not populated
Consult Factory for other Loading Options

TAIL LENGTH
1 = 5.00 [.197] Press-Fit
2 = 13.00 [.512] Press-Fit
3 = 6.00 [.236] Press-Fit
4 = 17.00 [.669] Press-Fit
5 = 2.92 [.115] Dip Solder
6 = 4.06 [.160] Dip Solder
7 = 13.00 [.512] Dip Solder Wire Wrap

MATING AREA PLATING
1 = Class 1
2 = Class 2
3 = Class 3

TAIL PLATING
1 = Tin Lead
2 = Gold flash (.200" from pin tip)
3 = Gold plate 30µ" (.200" from pin tip)
4 = Gold plate 15µ" (.200" from pin tip)

MC = Mounting Clips
Blank = No Mounting Clips

CONSULT FACTORY FOR CONNECTORS BUILT TO YOUR DESIGN

DIN 41612
Type C, C/2 Male Connectors

Type C, 96 Positions

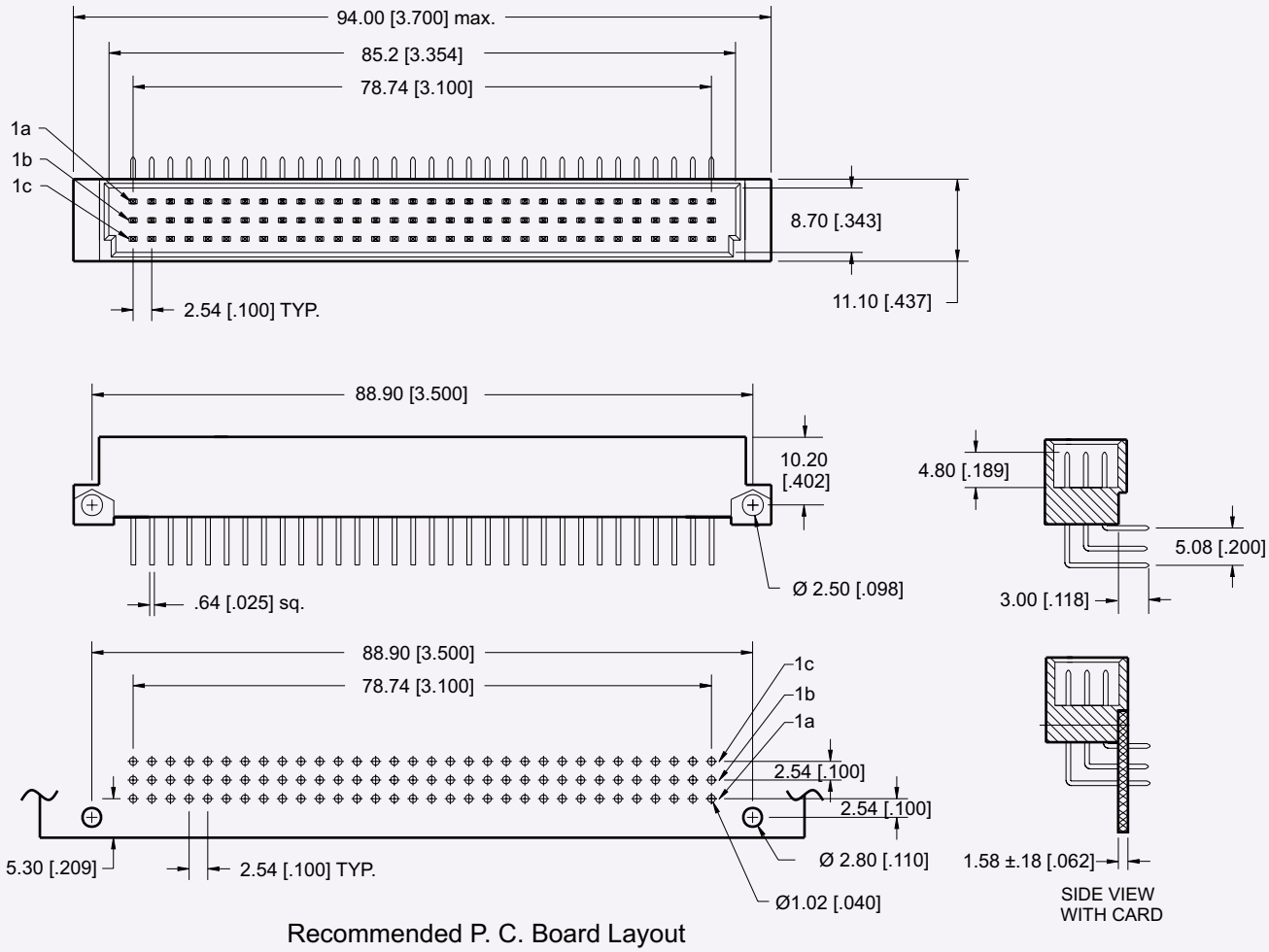

Recommended P. C. Board Layout

Dimensions are in mm [inches]

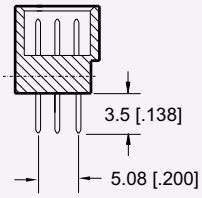

Straight Tail: -500 Option

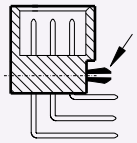

Mounting Clips: -MC Option

Type C/2, 48 Positions

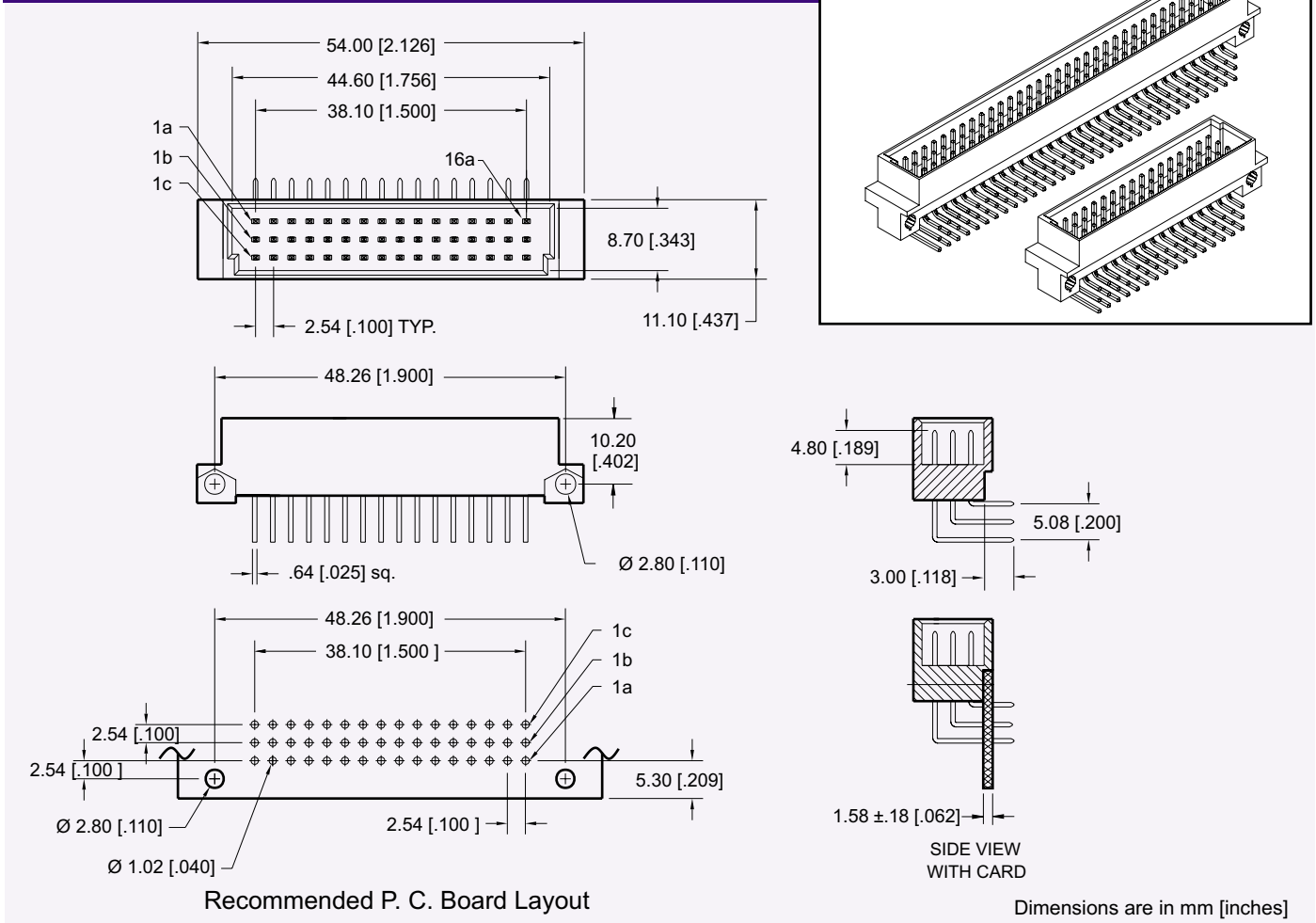

Recommended P. C. Board Layout

Dimensions are in mm [inches]

PART NUMBERING

61 — X X X — X 8 X X — XXX

SERIES CODE
DIN 41612 Type C, C/2 Male

BODY STYLE
1 = C/2 (48 positions)
2 = C (96 positions)

NUMBER OF CONTACTS
1 = 16
2 = 32
3 = 48
4 = 64
5 = 96

CONTACT ARRANGEMENT
1 = Row A, B, and C fully populated
2 = Row A and B fully populated, Row C not populated
3 = Row A and C fully populated, Row B not populated
4 = Row B and C fully populated, Row A not populated
Consult Factory for other Loading Options

EMLB/LMEB CONTACTS
2 = Standard Pin Loading
1 = EMLB / LMEB Contacts Required
(Consult Factory for EMLB / LMEB Contact Locations)

MATING AREA PLATING
1 = Class 1
2 = Class 2
3 = Class 3

TAIL PLATING
1 = Tin Lead

Blank = No Mounting Clip
MC = Mounting Clip
500 = Straight Tail

CONSULT FACTORY FOR CONNECTORS BUILT TO YOUR DESIGN

DIN 41612

Type R, R/2, R/3 and R Extended Male Connectors

Type R (96 Positions), R Extended (120 and 150 Positions)

Dim.	96 Positions	120 Positions	150 Positions
A	78.74 [3.100]	99.06 [3.900]	124.46 [4.900]
B	85.20 [3.354]	105.51 [4.154]	130.91 [5.154]
C	90.00 [3.543]	110.31 [4.343]	135.71 [5.343]
D	95.00 [3.740]	115.32 [4.540]	140.72 [5.540]

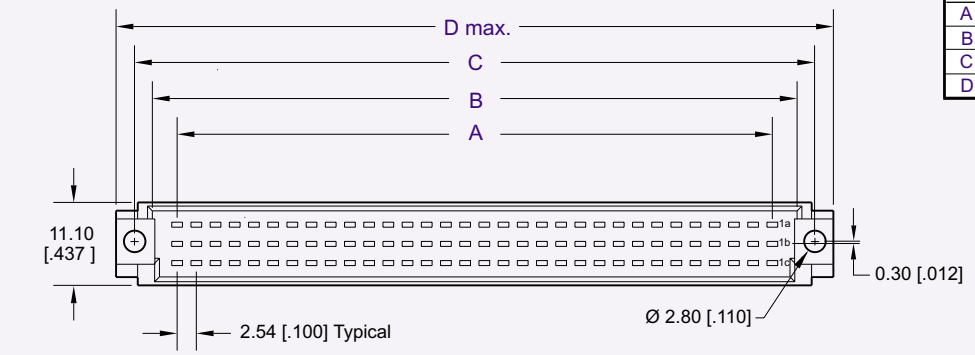

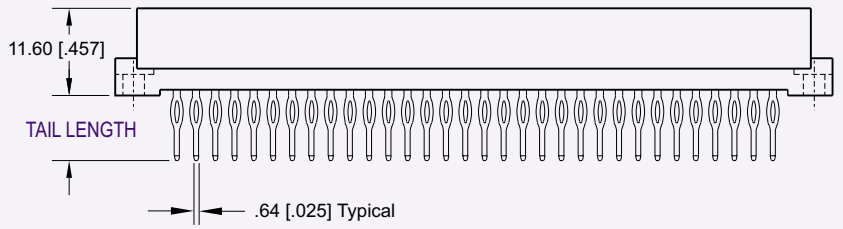

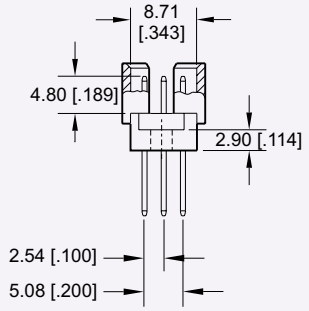

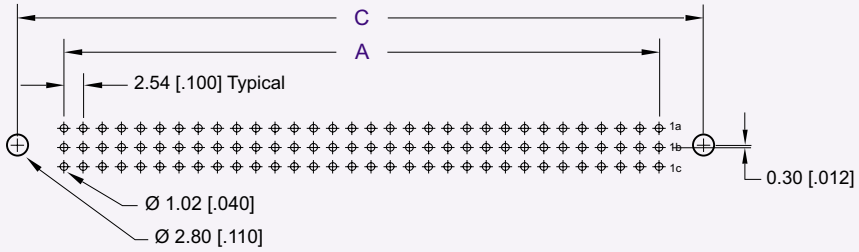

Recommended P. C. Board Layout

Dimensions are in mm [inches]

TAIL LENGTH OPTIONS

Press Fit

1

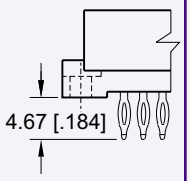

2

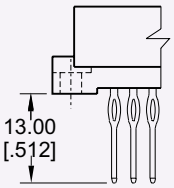

3

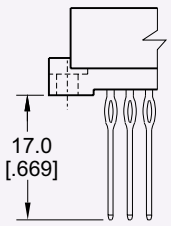

4

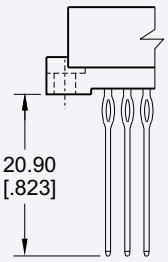

Solder and Wire Wrap

5

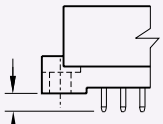

6

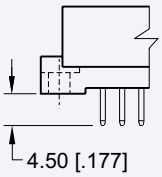

7

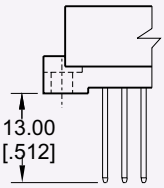

Type R/2, 48 Positions

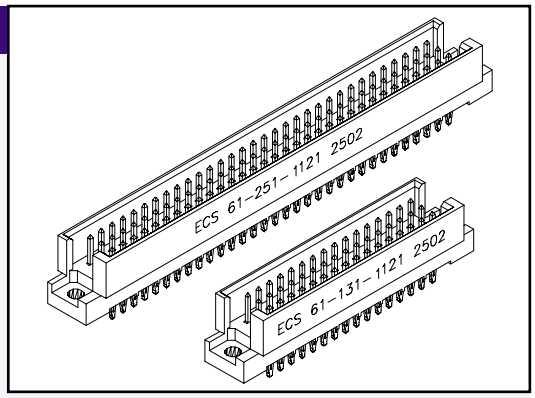

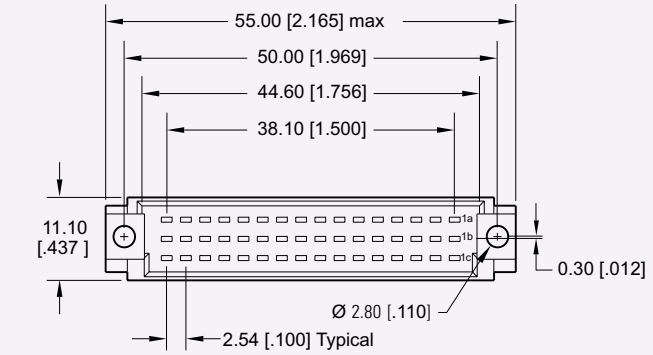

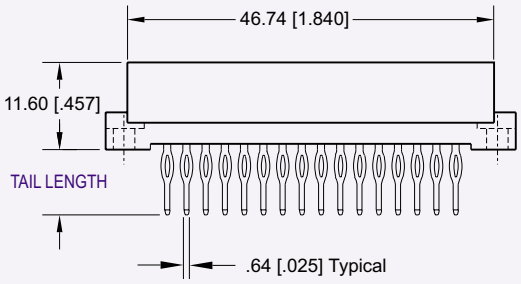

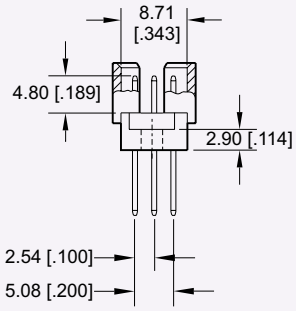

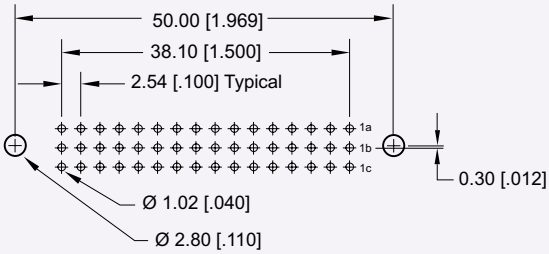

Recommended P. C. Board Layout

Dimensions are in mm [inches]

PART NUMBERING

61 — XXX — XXXX — XX

MC = Mounting Clip
Blank = No Mounting Clip

SERIES CODE

Type R, R/2, R/3 and R Extended

NO. CONTACT POSITIONS

0 = R/3 (30 positions) not shown
1 = R/2 (48 positions)
2 = R (96 positions)
3 = R Extended (150 positions)
4 = R Extended (120 positions)

NUMBER OF CONTACTS

0 = 30
1 = 16
2 = 32
3 = 48
4 = 64
5 = 96
6 = 150
7 = 120

CONTACT ARRANGEMENT

1 = Row A, B, and C fully populated
2 = Row A and B fully populated, Row C not populated
3 = Row A and C fully populated, Row B not populated
4 = Row B and C fully populated, Row A not populated
Consult Factory for other Loading Options

Note: Press Fit Connectors required a press in tool.
See page C-48 for Press In Tool information.

TAIL PLATING

1 = Tin Lead
2 = Gold flash (.200" from pin tip)
3 = Gold plate 30µ" (.200" from pin tip)
4 = Gold plate 15µ" (.200" from pin tip)

MATING AREA PLATING

1 = Class 1
2 = Class 2
3 = Class 3

TAIL LENGTH

1 = 4.67 [.184] Press-Fit
2 = 13.00 [.512] Press-Fit
3 = 17.00 [.669] Press-Fit
4 = 20.90 [.823] Press-Fit
5 = 2.90 [.114] Dip Solder
6 = 4.50 [.177] Dip Solder
7 = 13.00 [.512] Dip Solder Wire Wrap

CONTACT TYPE

1 = For all Press Fit Connectors
(Consult Factory if EM/LB Contact Required)
1 = Solder Version Requiring EM/LB Contacts
(Consult Factory)
2 = Solder Versions (Standard Contacts)

CONSULT FACTORY FOR CONNECTORS BUILT TO YOUR DESIGN

DIN 41612

Type R, R/2 and R Extended Female Connectors

Type R (96 Positions), R Extended (120 Positions)

Dim.	96 Positions	120 Positions
A	78.74 [3.100]	99.06 [3.900]
B	85.00 [3.346]	105.21 [4.142]
C	94.00 [3.700]	114.20 [4.496]
D	88.90 [3.500]	109.22 [4.300]

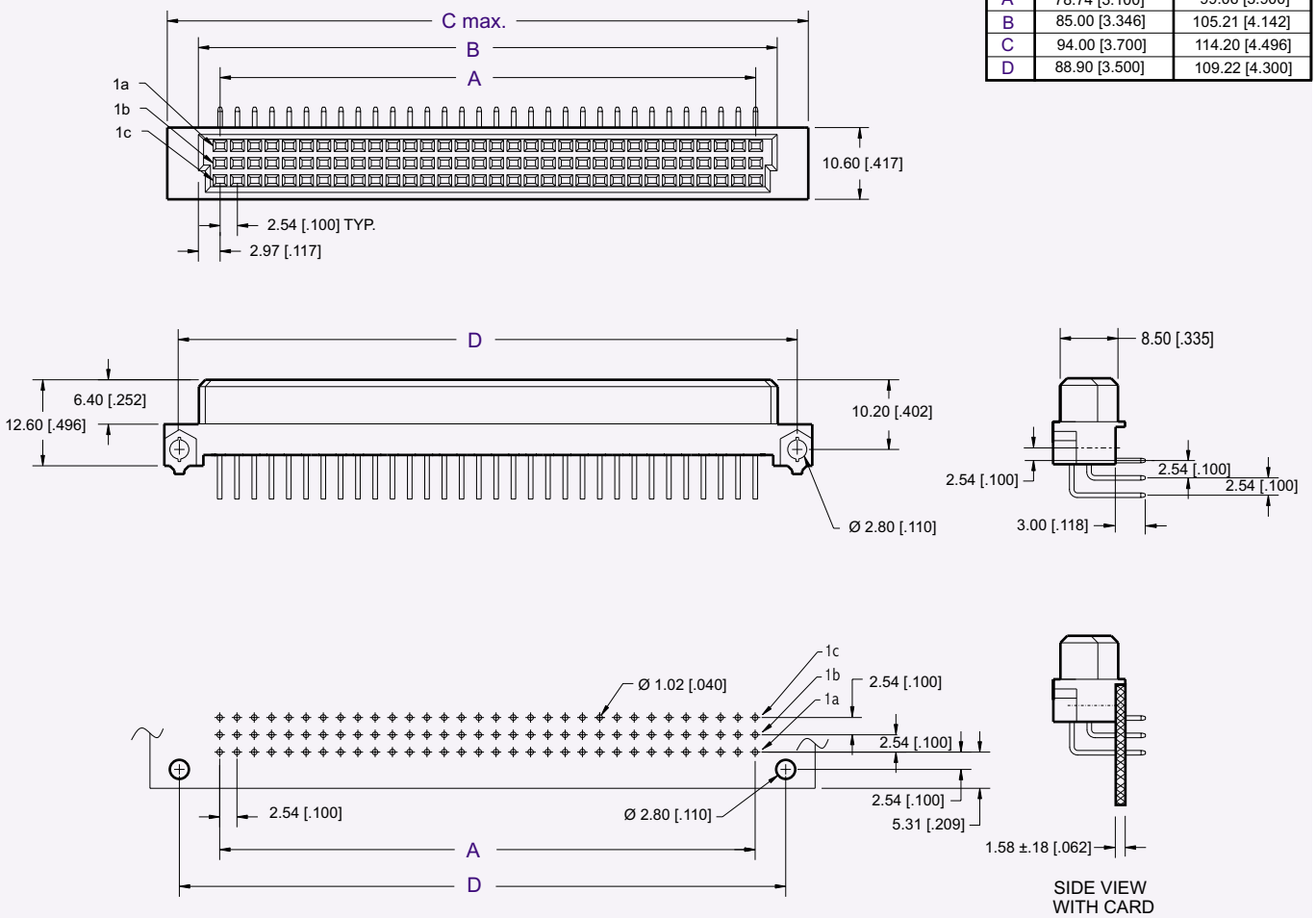

Recommended P. C. Board Layout

Dimensions are in mm [inches]

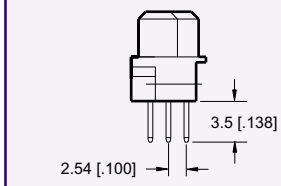

Straight Tail: -500 Option

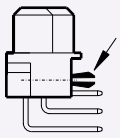

Mounting Clips: -MC Option

Type R/2, 48 Positions

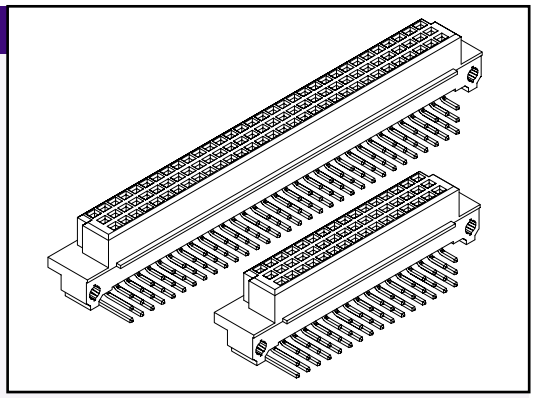

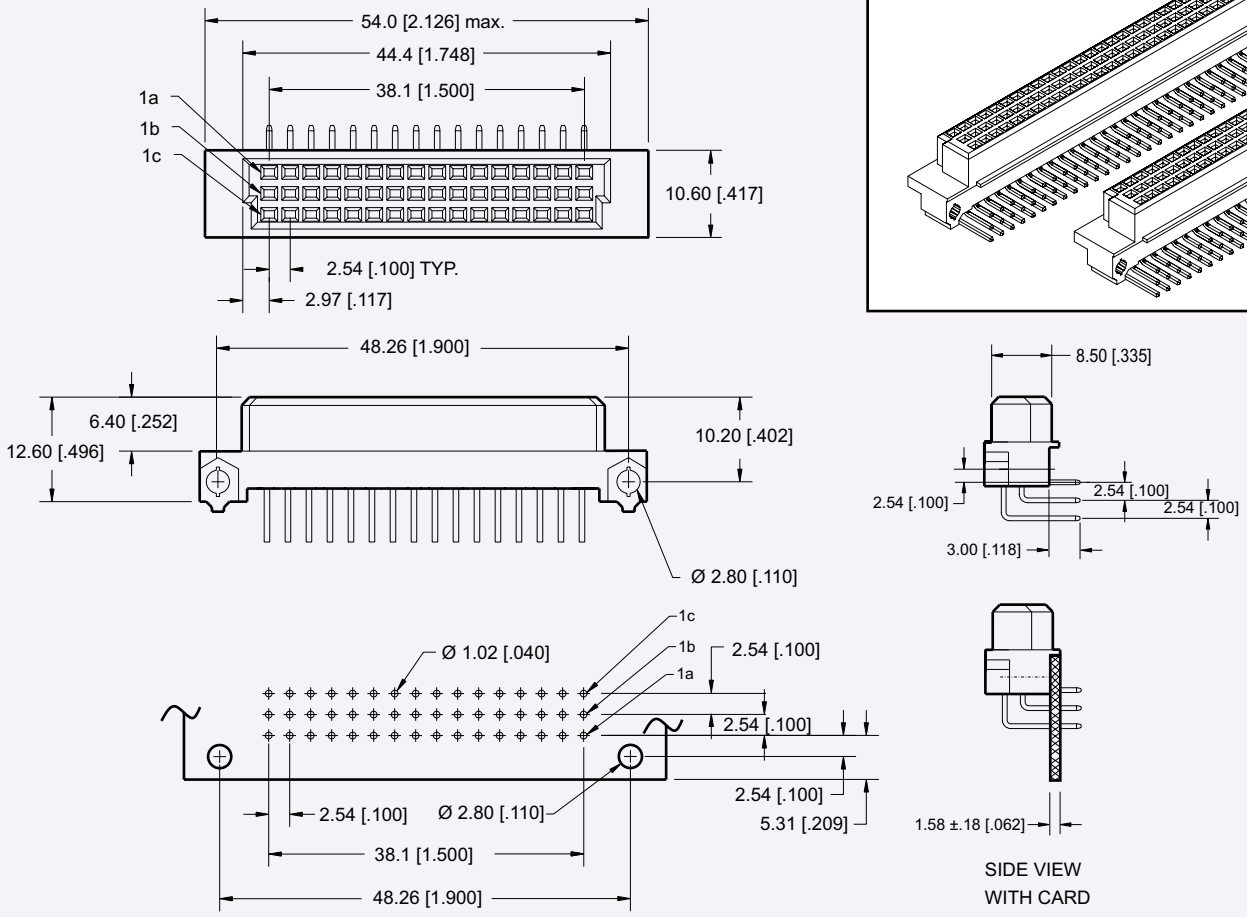

Recommended P. C. Board Layout

Dimensions are in mm [inches]

PART NUMBERING

51 — XXX — 8XX — XXX

SERIES CODE

DIN 41612 Type R, R/2, R Extended Female

BODY STYLE

1 = R/2 (48 positions)
2 = R (96 positions)
4 = R Extended (120 positions)

NUMBER OF CONTACTS

1 = 16
2 = 32
3 = 48
4 = 64
5 = 96
7 = 120

CONTACT LOADING

1 = Row A, B, and C fully populated
2 = Row A and B fully populated, Row C not populated
3 = Row A and C fully populated, Row B not populated
4 = Row B and C fully populated, Row A not populated
Consult Factory for other Loading Options

MATING AREA PLATING

1 = Class 1
2 = Class 2
3 = Class 3

TAIL PLATING

1 = Tin Lead

Blank = No Mounting Clip
MC = Mounting Clip
500 = Straight Tail

CONSULT FACTORY FOR CONNECTORS BUILT TO YOUR DESIGN

DIN 41612
Type CD, CD/2 Female Connectors

Type CD, 128 Positions

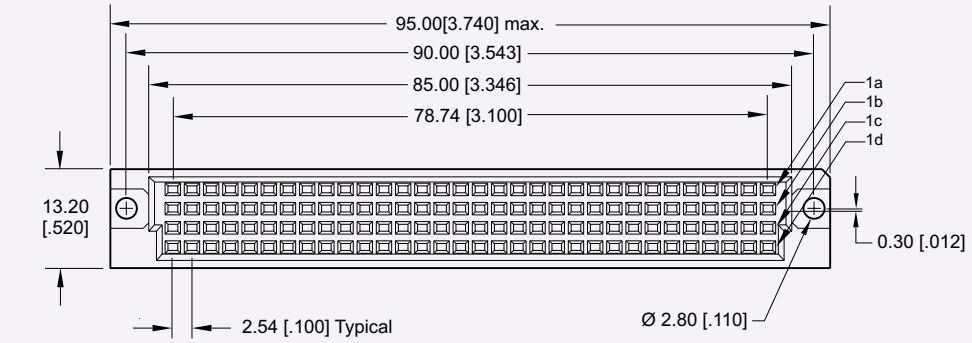

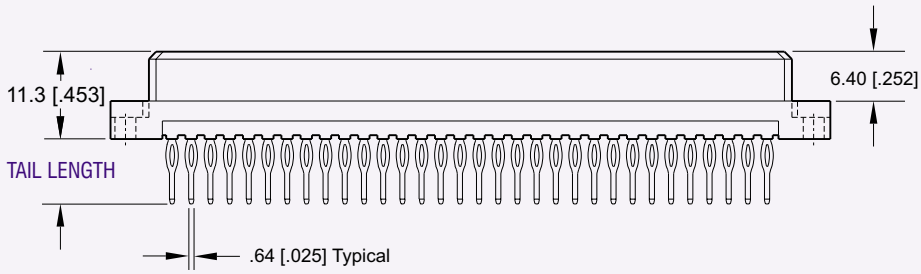

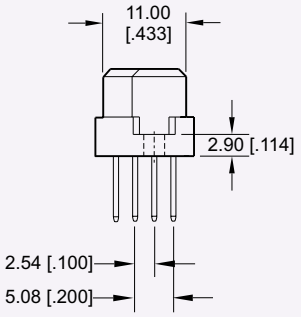

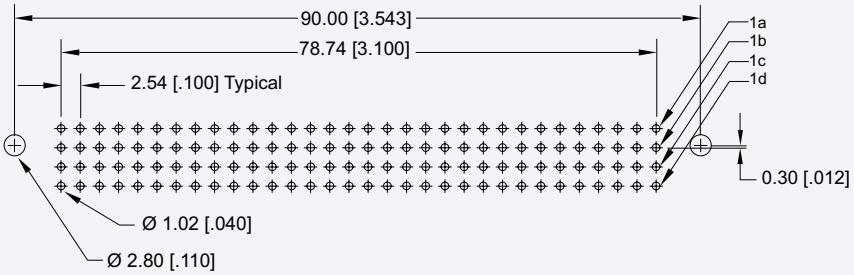

Recommended P. C. Board Layout

Dimensions are in mm [inches]

TAIL LENGTH OPTIONS

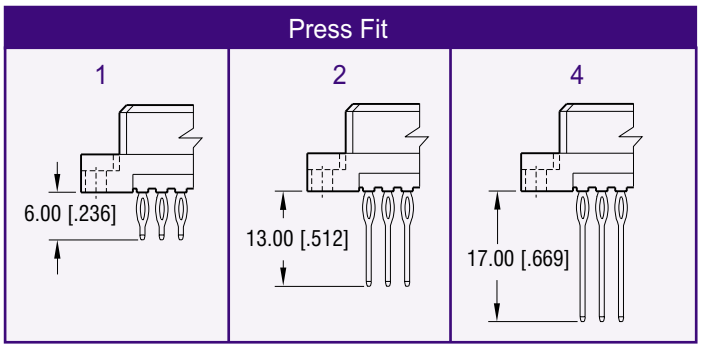

Type CD/2, 64 Positions

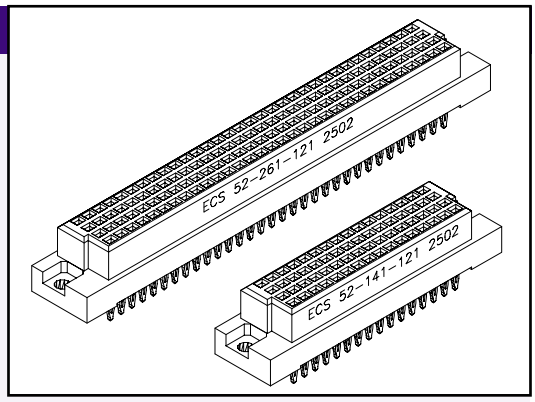

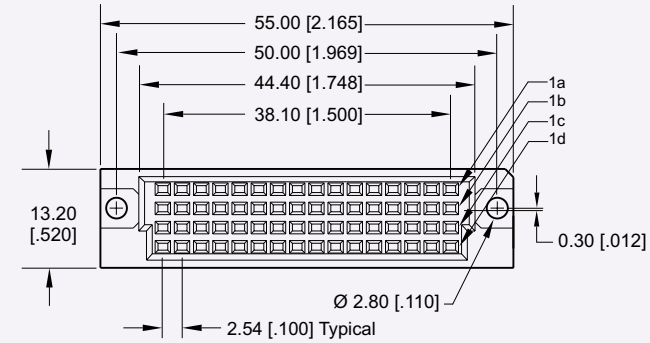

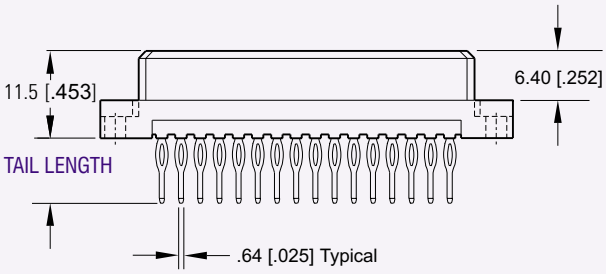

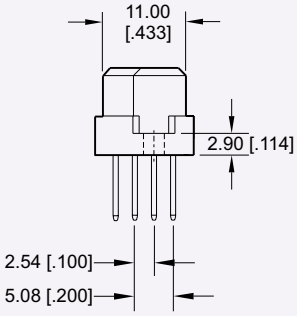

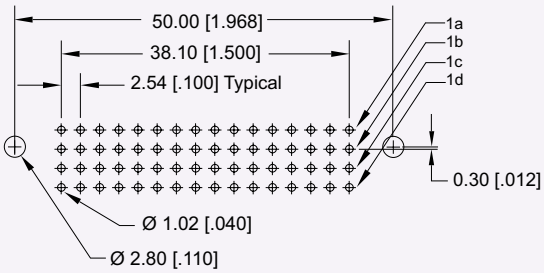

Recommended P. C. Board Layout

Dimensions are in mm [inches]

PART NUMBERING

52 — XXX — XXX

SERIES CODE
Type CD, CD/2 Female

BODY STYLE
1 = CD/2 (64 positions)
2 = CD (128 positions)

NO. OF CONTACTS
1 = 16
2 = 32
3 = 48
4 = 64
5 = 96
6 = 128

CONTACT ARRANGEMENT
1 = Row A, B,C and D fully populated
Consult Factory for other Loading Options

TAIL PLATING
1 = Tin Lead
2 = Gold flash (.200" from pin tip)
3 = Gold plate 30µ" (.200" from pin tip)
4 = Gold plate 15µ" (.200" from pin tip)

MATING AREA PLATING
1 = Class 1
2 = Class 2
3 = Class 3

TAIL LENGTH
1 = 6.00 [.236] Press-Fit
2 = 13.00 [.512] Press-Fit
4 = 17.00 [.669] Press-Fit

CONSULT FACTORY FOR CONNECTORS BUILT TO YOUR DESIGN

DIN 41612
Type RD, RD/2 Male Connectors

Type RD, 128 Positions

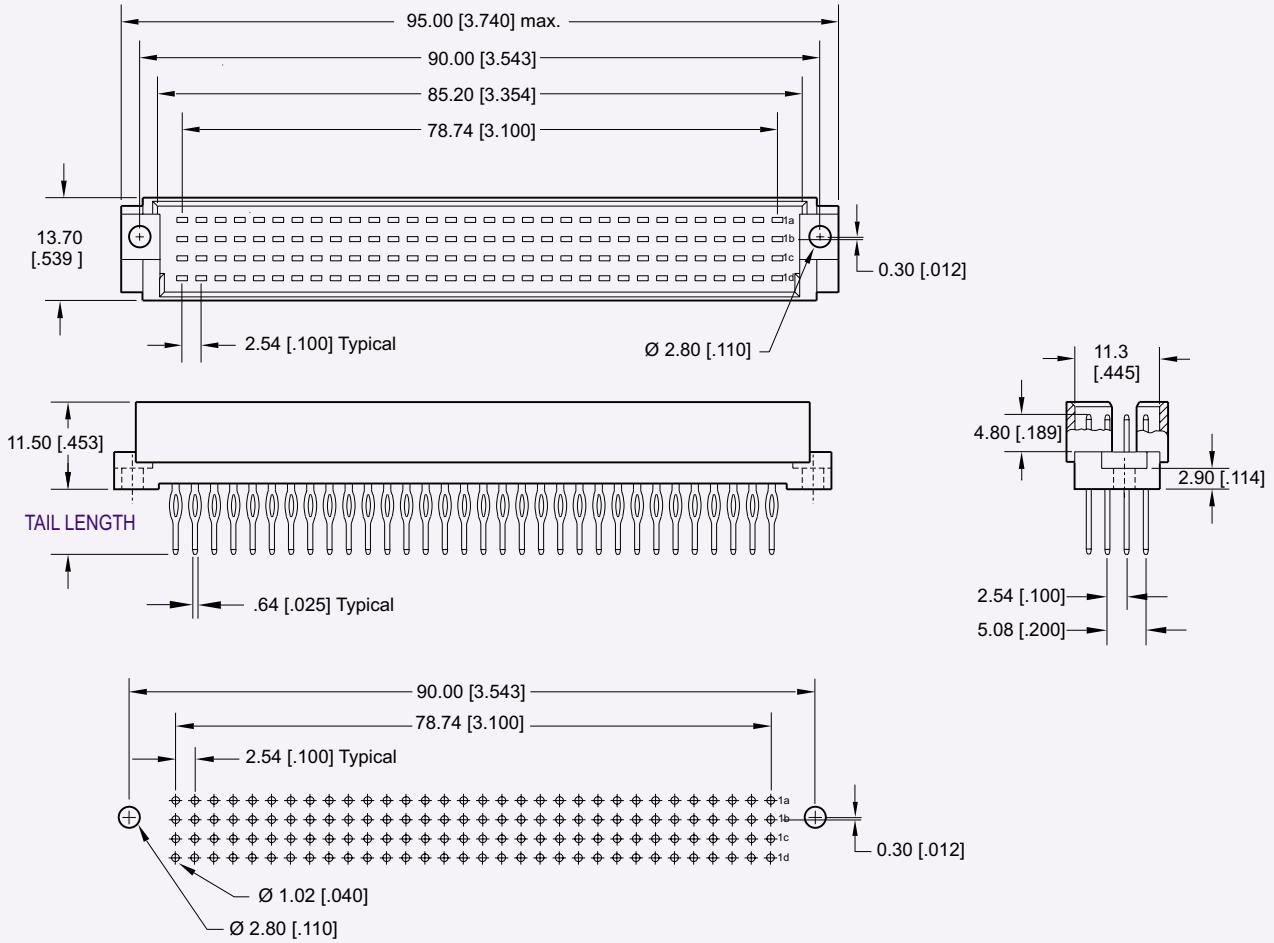

Recommended P. C. Board Layout

Dimensions are in mm [inches]

TAIL LENGTH OPTIONS

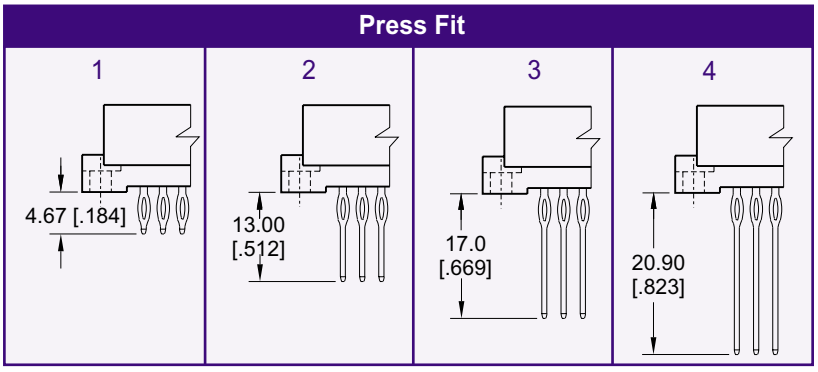

Type RD/2, 64 Positions

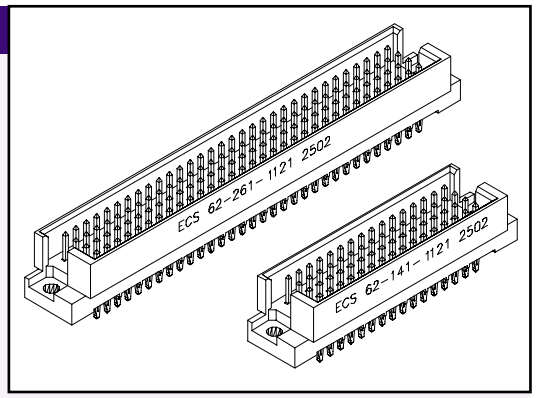

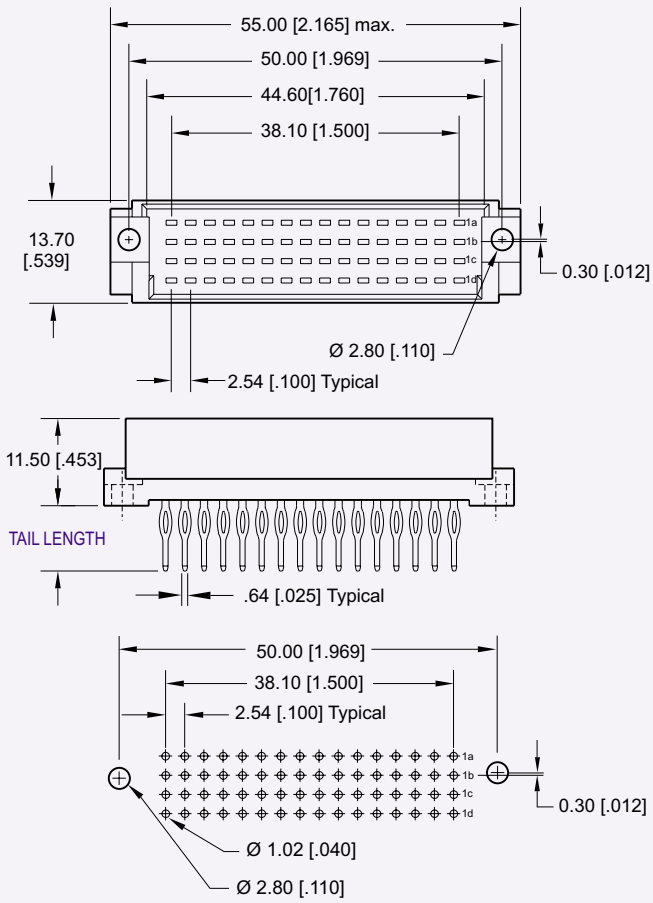

Recommended P. C. Board Layout

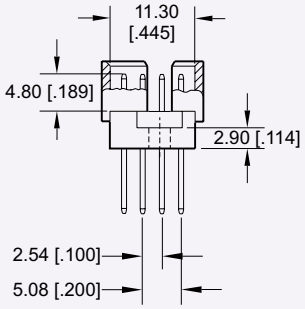

Dimensions are in mm [inches]

PART NUMBERING

62 — X X X — 1 X X X

SERIES CODE
Type RD, RD/2 Male

BODY STYLE
1 = RD/2 (64 positions)
2 = RD (128 positions)

NUMBER OF CONTACTS
1 = 16
2 = 32
3 = 48
4 = 64
5 = 96
6 = 128

CONTACT ARRANGEMENT
1 = Row A, B,C and D fully populated
Consult Factory for other Loading Options

TAIL PLATING
1 = Tin / Lead
2 = Gold flash (.200" from pin tip)
3 = Gold plate 30µ" (.200" from pin tip)
4 = Gold plate 15µ" (.200" from pin tip)

MATING AREA PLATING
1 = Class 1
2 = Class 2
3 = Class 3

TAIL LENGTH
1 = 4.67 [.184] Press-Fit
2 = 13.00 [.512] Press-Fit
3 = 17.00 [.669] Press-Fit
4 = 20.90 [.823] Press-Fit

Note: Press Fit Connectors required a press in tool.
See page C-48 for Press In Tool information.

CONSULT FACTORY FOR CONNECTORS BUILT TO YOUR DESIGN

DIN 41612
Type E, E/2 Female Connectors

Type E, 160 Positions

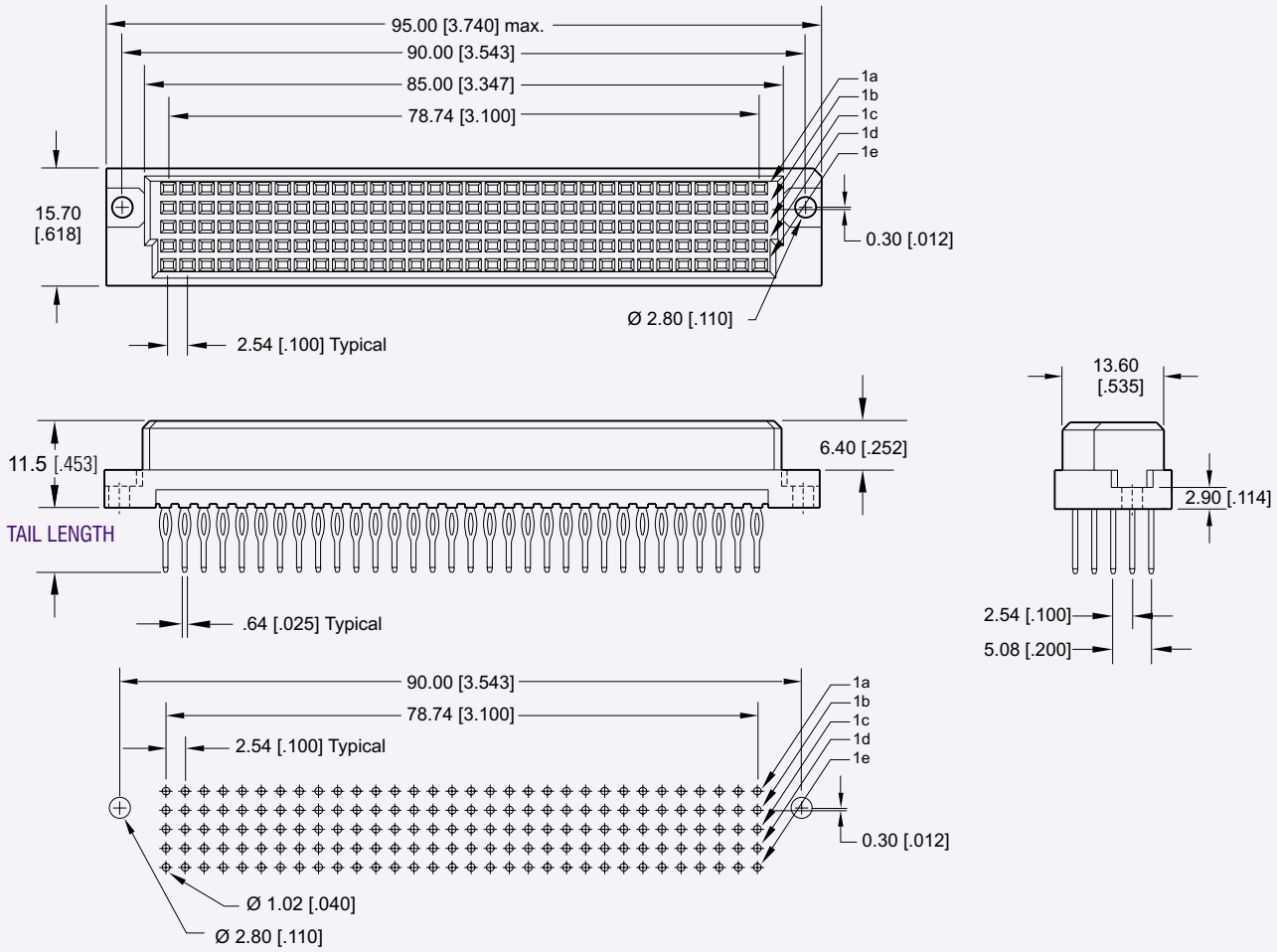

Recommended P. C. Board Layout

Dimensions are in mm [inches]

TAIL LENGTH OPTIONS

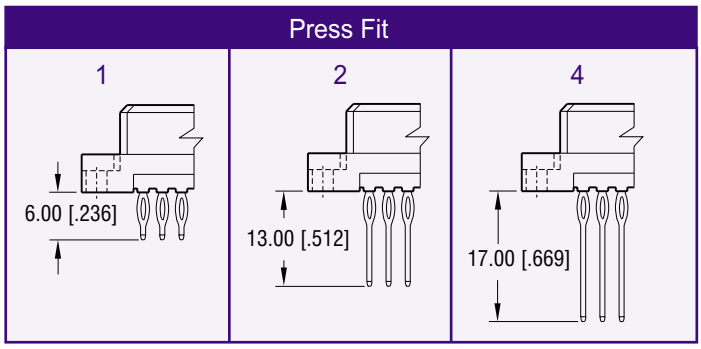

CONSULT FACTORY FOR CONNECTORS BUILT TO YOUR DESIGN

Type E/2, 80 Positions

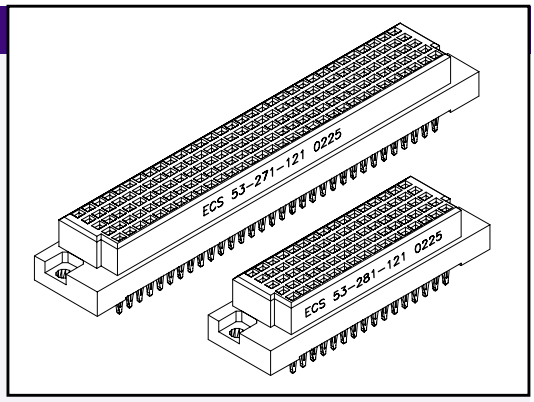

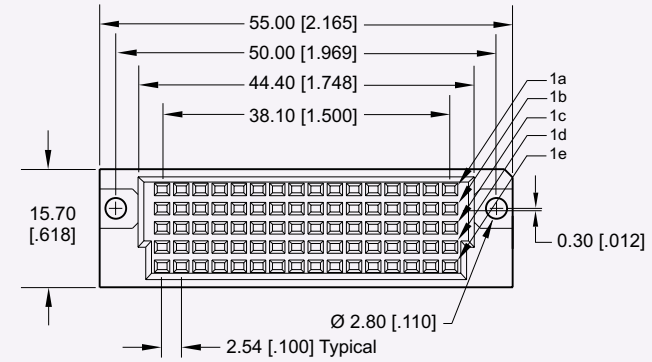

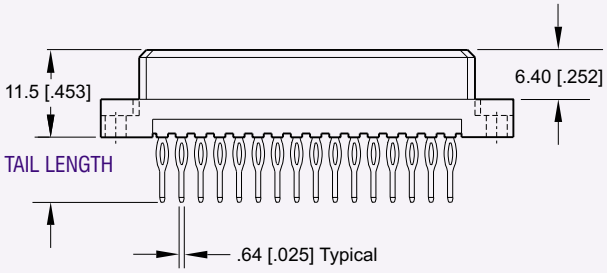

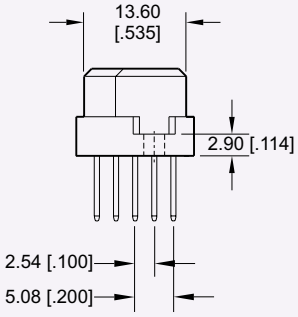

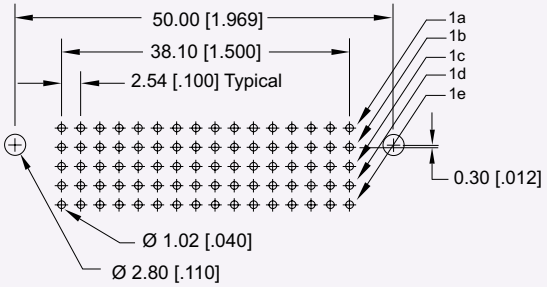

Recommended P. C. Board Layout

PART NUMBERING

53 — X X X — X X X

SERIES CODE
Type E, E/2 Female

BODY STYLE
1 = E/2 (80 positions)
2 = E (160 positions)

NUMBER OF CONTACTS
1 = 16
2 = 32
3 = 48
4 = 64
5 = 96
6 = 128
7 = 160
8 = 80

CONTACT ARRANGEMENT
1 = Row A, B, C, D and E fully populated
Consult Factory for other Loading Options

TAIL PLATING
1 = Tin Lead
2 = Gold flash (.200" from pin tip)
3 = Gold plate 30µ" (.200" from pin tip)
4 = Gold plate 15µ" (.200" from pin tip)

MATING AREA PLATING
1 = Class 1
2 = Class 2
3 = Class 3

TAIL LENGTH
1 = 6.00 [.236] Press-Fit
2 = 13.00 [.512] Press-Fit
4 = 17.00 [.669] Press-Fit

DIN 41612
Type TE, TE/2 Male Connectors

Type TE, 160 Positions

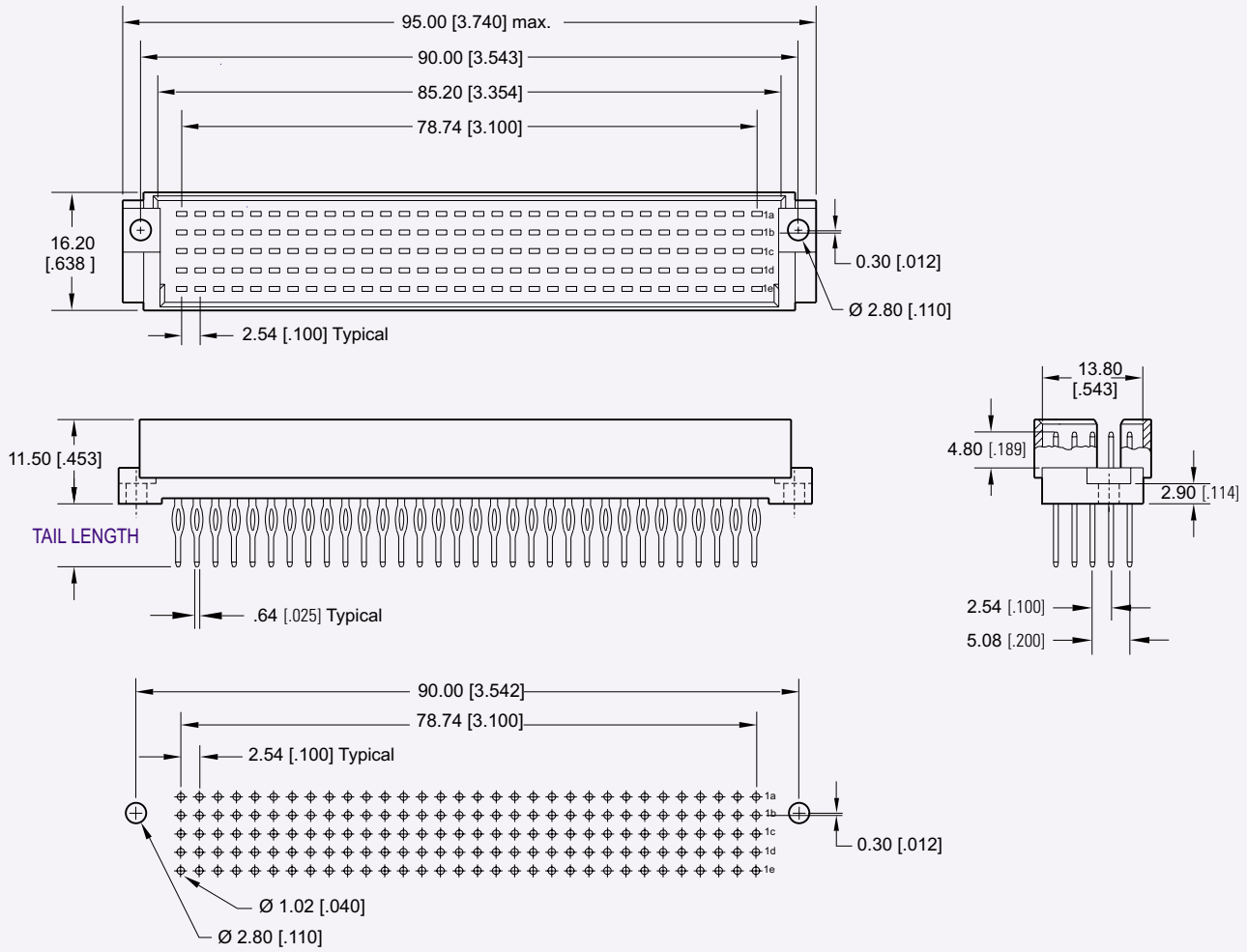

Recommended P. C. Board Layout

Dimensions are in mm [inches]

TAIL LENGTH OPTIONS

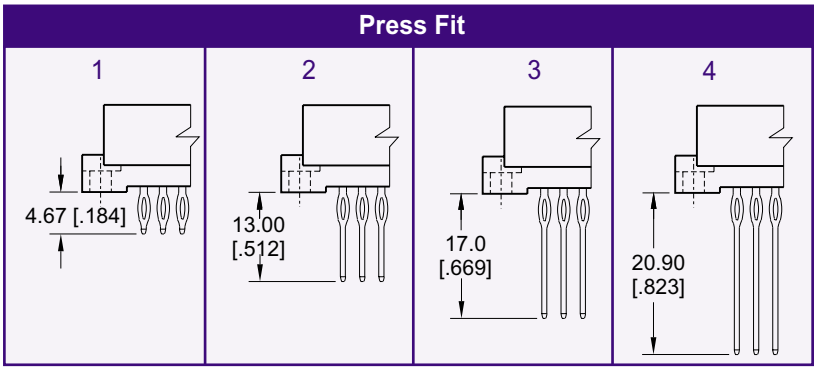

Type TE/2, 80 Positions

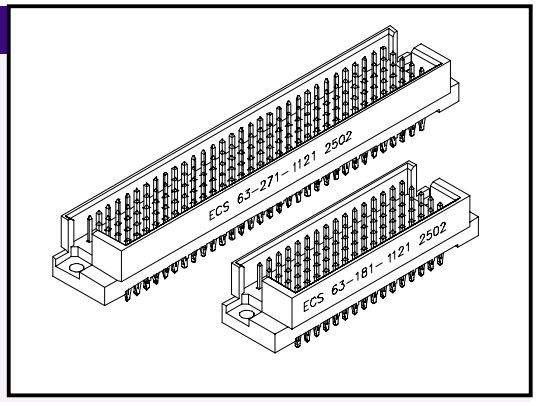

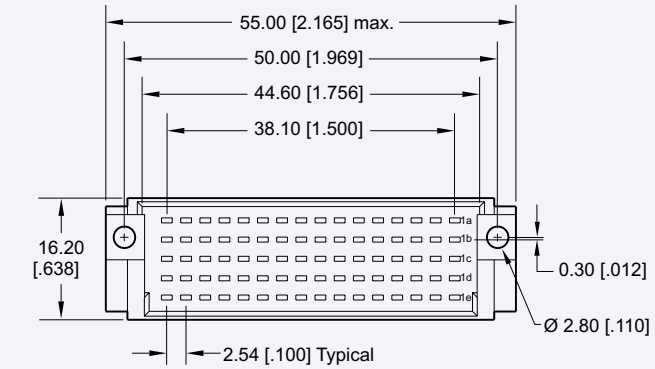

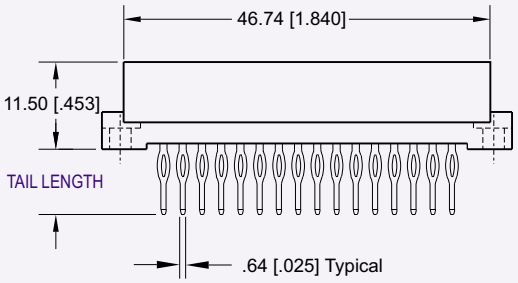

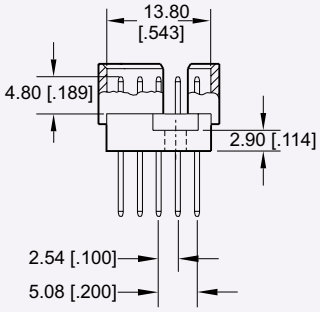

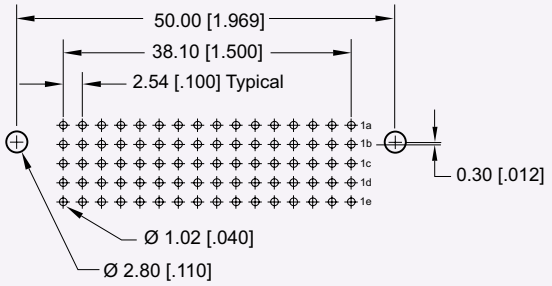

Recommended P. C. Board Layout

Dimensions are in mm [inches]

PART NUMBERING

63 — X X X — 1 X X X

SERIES CODE
Type TE, TE/2 DIN

BODY STYLE
1 = TE/2 (80 positions)
2 = TE (160 positions)

NUMBER OF CONTACTS
1 = 16
2 = 32
3 = 48
4 = 64
5 = 96
6 = 128
7 = 160
8 = 80

CONTACT ARRANGEMENT
1 = Row A, B, C, D and E fully populated
Consult Factory for other Loading Options

TAIL PLATING
1 = Tin Lead
2 = Gold flash (.200" from pin tip)
3 = Gold plate 30µ" (.200" from pin tip)
4 = Gold plate 15µ" (.200" from pin tip)

MATING AREA PLATING
1 = Class 1
2 = Class 2
3 = Class 3

TAIL LENGTH
1 = 4.67 [.184] Press-Fit
2 = 13.00 [.512] Press-Fit
3 = 17.00 [.669] Press-Fit
4 = 20.90 [.823] Press-Fit

Note: Press Fit Connectors required a press in tool.
See page C-48 for Press In Tool information.

CONSULT FACTORY FOR CONNECTORS BUILT TO YOUR DESIGN

DIN 41612
Type M Female Connectors

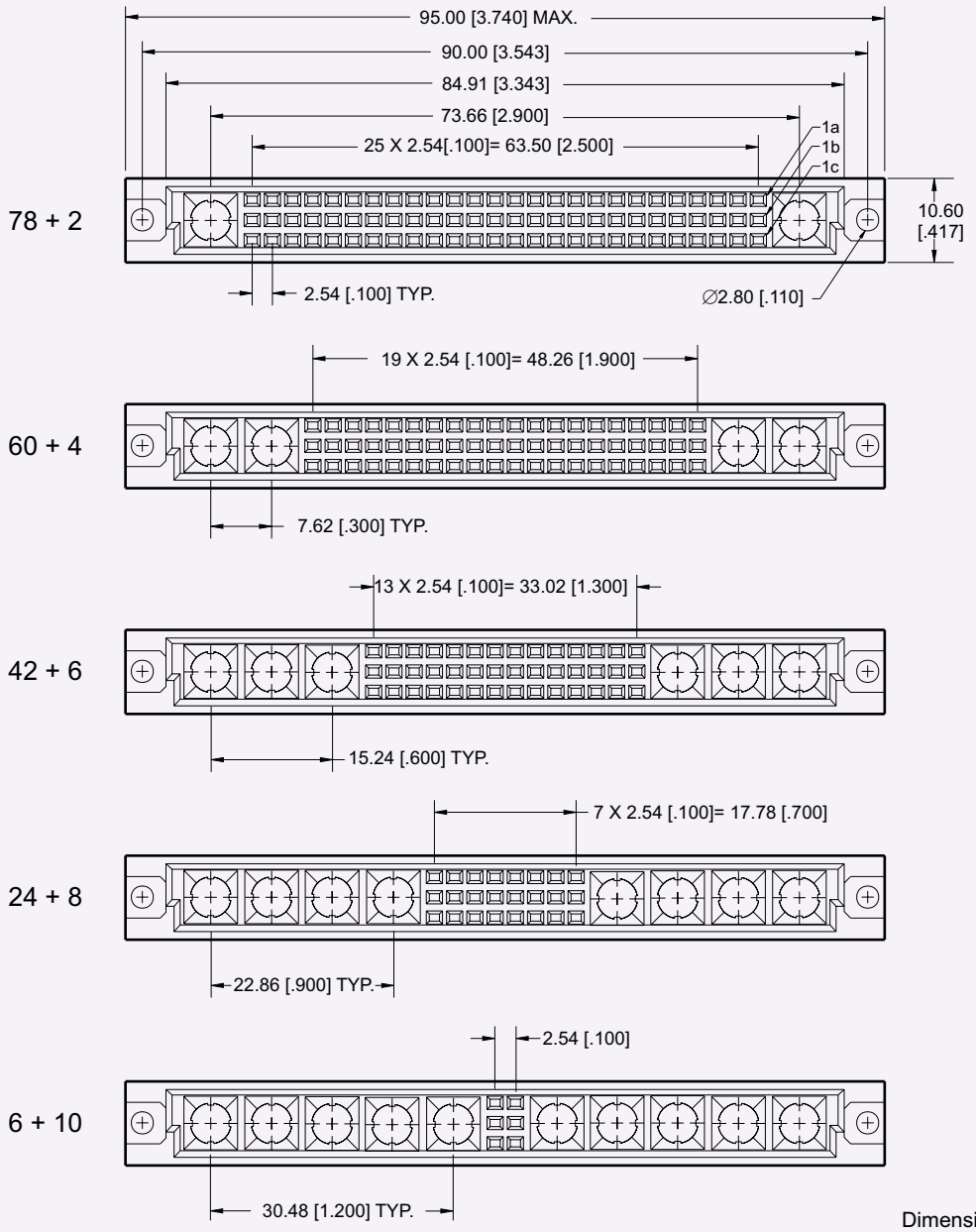

Dimensions are in mm [inches]

COAXIAL CONTACTS

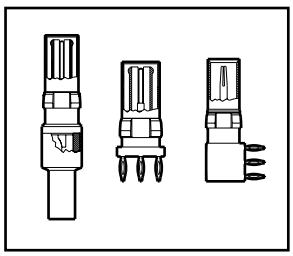

Page C41-C43

HIGH POWER CONTACTS

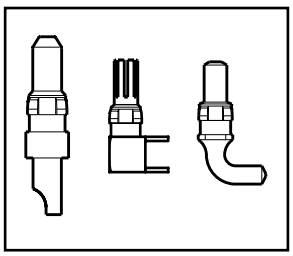

Page C44-C46

HIGH CURRENT CONTACTS

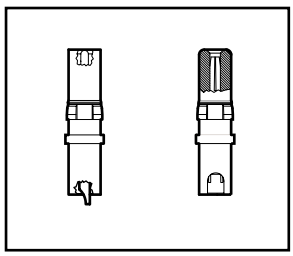

Page C47

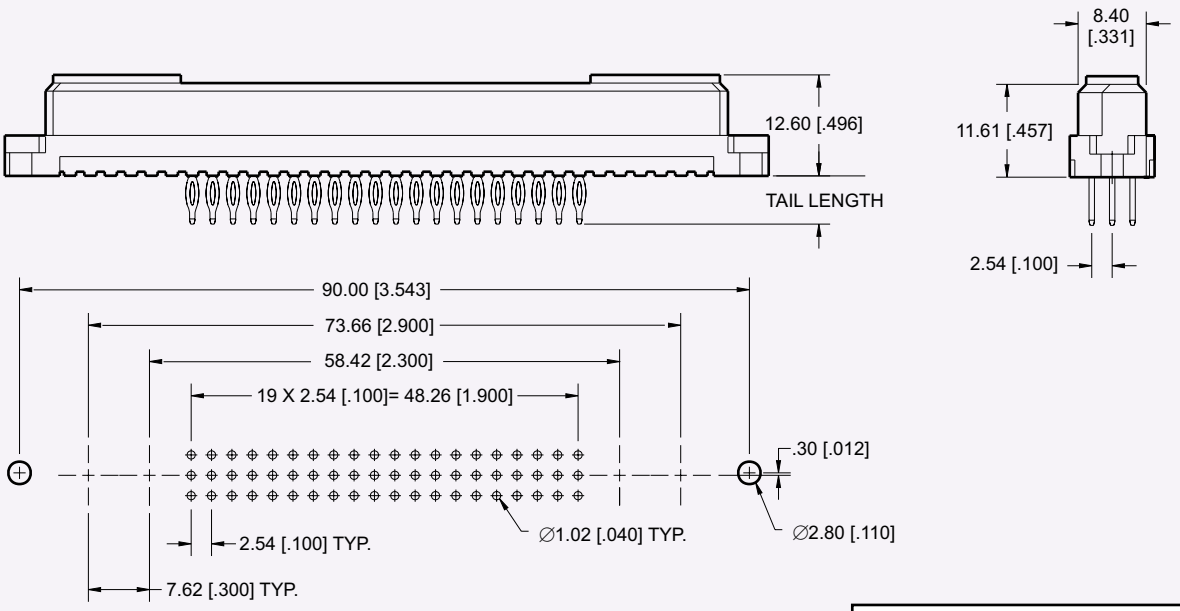

Type M, 60 + 4 Recommended P.C. Board Layout Shown

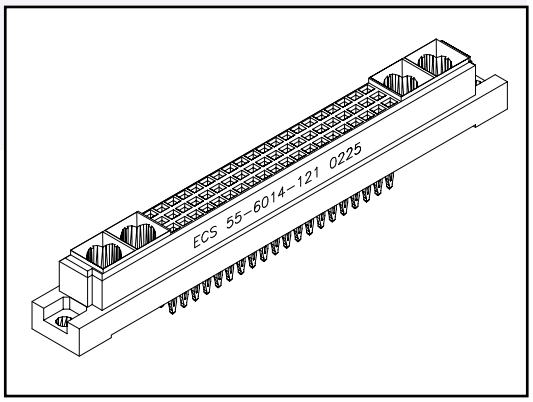

PART NUMBERING

55 — XX X X — X X X — XX

MC = Mounting Clips
Blank = No Mounting Clip

SERIES CODE

Type M Female DIN

SIGNAL CONTACTS

78
60
42
24
06

CONTACT ARRANGEMENT

1 = a, b, c
2 = a, b
3 = a, c
4 = b, c
5 = a
6 = b
7 = c

MULTI PURPOSE CAVITIES

2
4
6
8
10

TAIL PLATING

1 = Tin Lead
2 = Gold flash (.200" from pin tip)
3 = Gold plate 30µ" (.200" from pin tip)
4 = Gold plate 15µ" (.200" from pin tip)

MATING AREA PLATING

1 = Class 1
2 = Class 2
3 = Class 3

TAIL LENGTH

1 = 5.00 [.197] Press-Fit
2 = 13.00 [.512] Press-Fit
4 = 17.00 [.669] Press-Fit
5 = 2.92 [.115] Dip Solder
6 = 4.06 [.160] Dip Solder
7 = 13.00 [.512] Dip Solder Wire Wrap

6500 Series Male DIN
41612 Type M Connectors

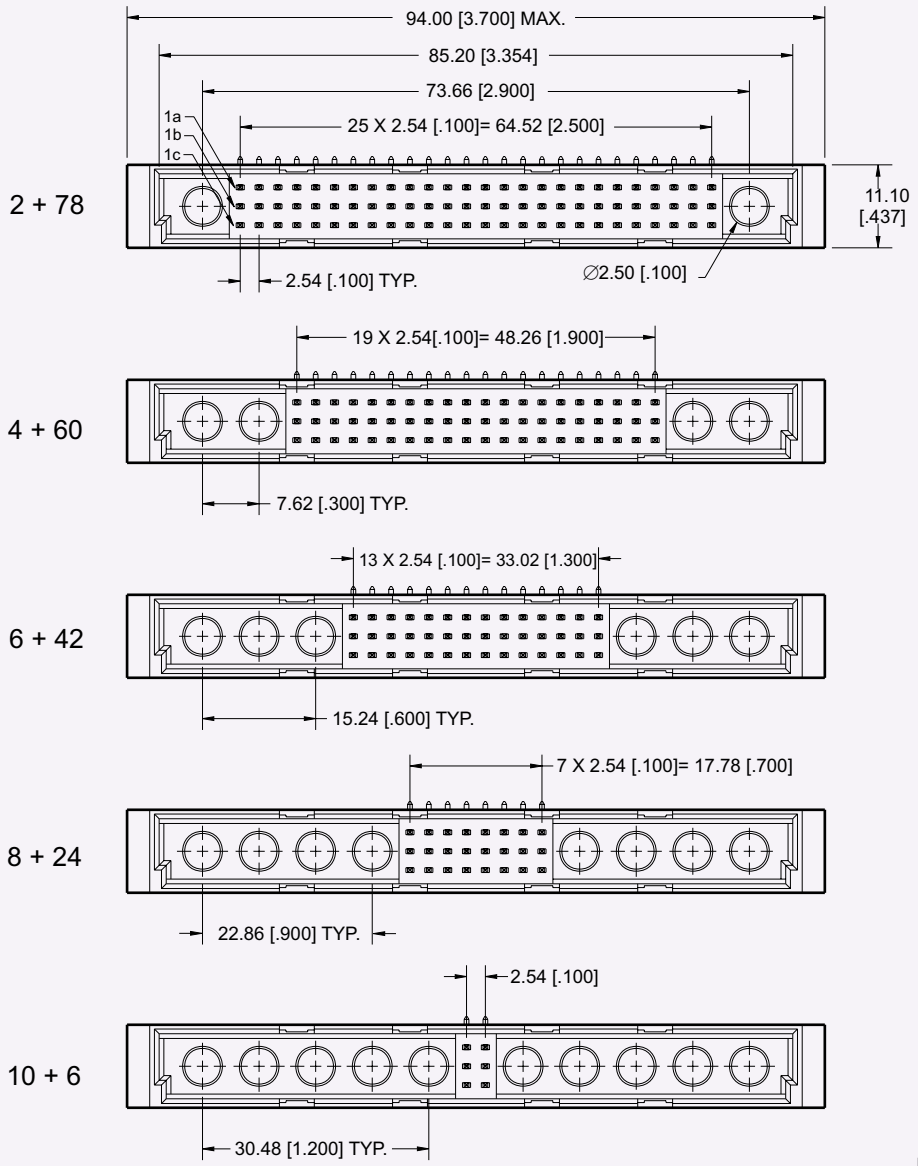

Dimensions are in mm [inches]

COAXIAL CONTACTS

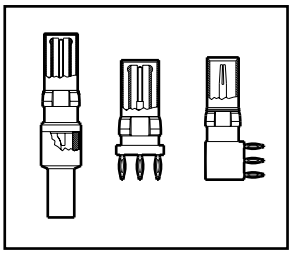

Page C41-C43

HIGH POWER CONTACTS

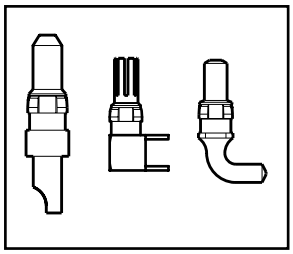

Page C44-C46

HIGH CURRENT CONTACTS

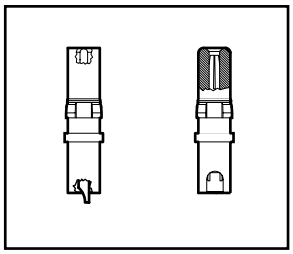

Page C47

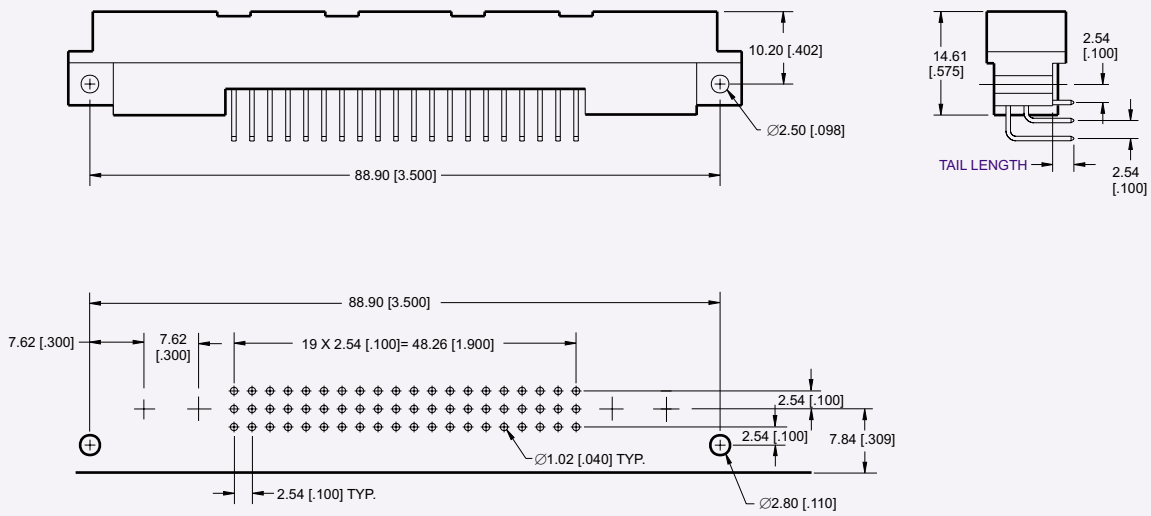

Type M, 60 + 4 Recommended P.C. Board Layout Shown

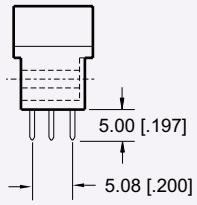

Straight Tail: -500 Option

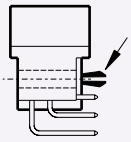

Mounting Clips: -MC Option

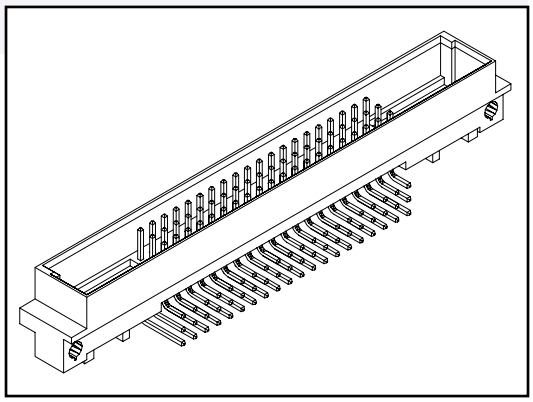

PART NUMBERING

65 — XX X X — X X X X — XXX

SERIES CODE
Type M Male DIN

SIGNAL CONTACTS
78
60
42
24
06

CONTACT ARRANGEMENT
1 = a, b, c
2 = a, b
3 = a, c
4 = b, c
5 = a
6 = b
7 = c

MULTI PURPOSE CAVITIES
2, 4,6, 8, 10

EMLB / LMEB CONTACT
1 = Required (consult factory)
2 = Not Required (standard contact loading)

TAIL LENGTH
1 = 2.92 [.115] Right Angle
8 = 5.00 [.`197] Straight Tail

MATING AREA PLATING
1 = Class 1
2 = Class 2
3 = Class 3

TAIL PLATING
1 = Tin / Lead
2 = Gold flash (.200" from pin tip)
3 = Gold plate 30µ" thick min.
(.200" from pin tip)

MC = Mounting Clips
Blank = No Mounting Clip
500 = Straight Tail

CONSULT FACTORY FOR CONNECTORS BUILT TO YOUR DESIGN

ELECTRONIC CONNECTOR SERVICE INC. 11880 WESTERN AVE. STANTON, CA 90680 TOLL FREE (877) ECS-CONN TEL (714) 895-6351 FAX (714) 894-1858
WWW.ECSCONN.COM

60 Series Pinless
Backplane Shroud Type Q, Q/2, Q/3

Specifications

Insulator Material: Glass filled polyester, type PBT, 94 V-O, UL Rated.
Insulation Resistance: 10^{12} m Ohms
Dielectric Strength: 500 VDC (Sea Level)
Temperature Rating: -55° C to 125° C

Recognized under the recognized component Program of Underwriters Laboratories, Inc.

For drawings, technical data or samples, contact E.C.S. at 714/895-6351

Features

- Interference Fit Mounting eliminates the need for additional Mounting Hardware.
- Shrouds are removable, facilitating field repairability.
- Eight sizes accommodate 3 wrap-post lengths used in a wide range of PCBs.
- Shroud retained on .61 - .64 [.024 - .025] square posts.

The pin less backplane shroud provides board-to board interconnections from the DIN type Q or B connector to a second DIN connector interface.
The shrouds accommodate a variety of extended contact lengths to provide a versatile, rear panel connection system.

PART NUMBERING

60 — X XXX — X

SERIES CODE
Type Q, Q/2, Q/3 Shroud

COLOR
B = Black
G = Gray / Natural

BODY STYLE
1 = Q/3 (20 positions) not shown
2 = Q/2 (32 positions)
3 = Q (64 positions)

BODY HEIGHT

350 = 08.89 [.350]	600 = 15.24 [.600]
450 = 11.43 [.450]	630 = 16.02 [.630]
500 = 12.70 [.500]	680 = 17.27 [.680]
550 = 13.97 [.550]	750 = 19.05 [.750]

TYPE Q/2, 32 Positions

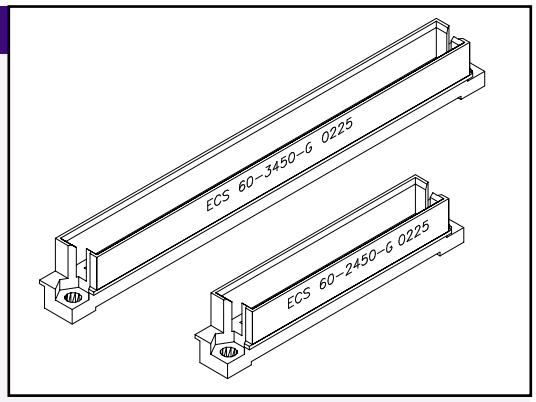

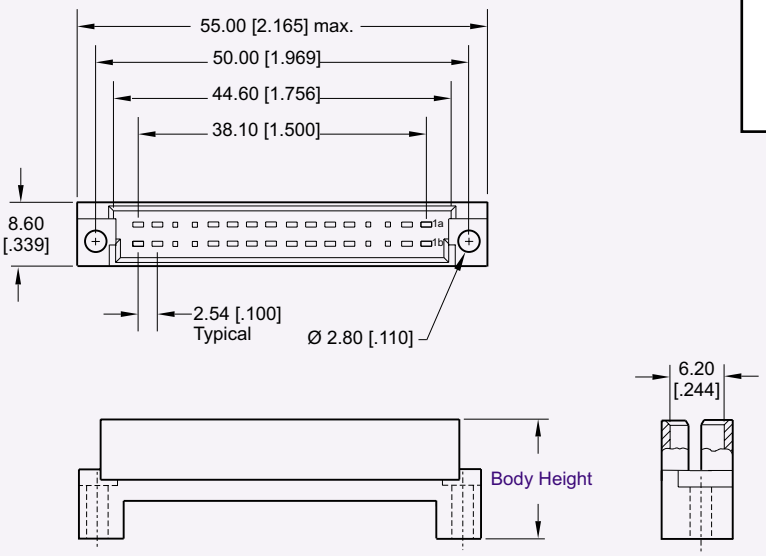

TYPE Q, 64 Positions

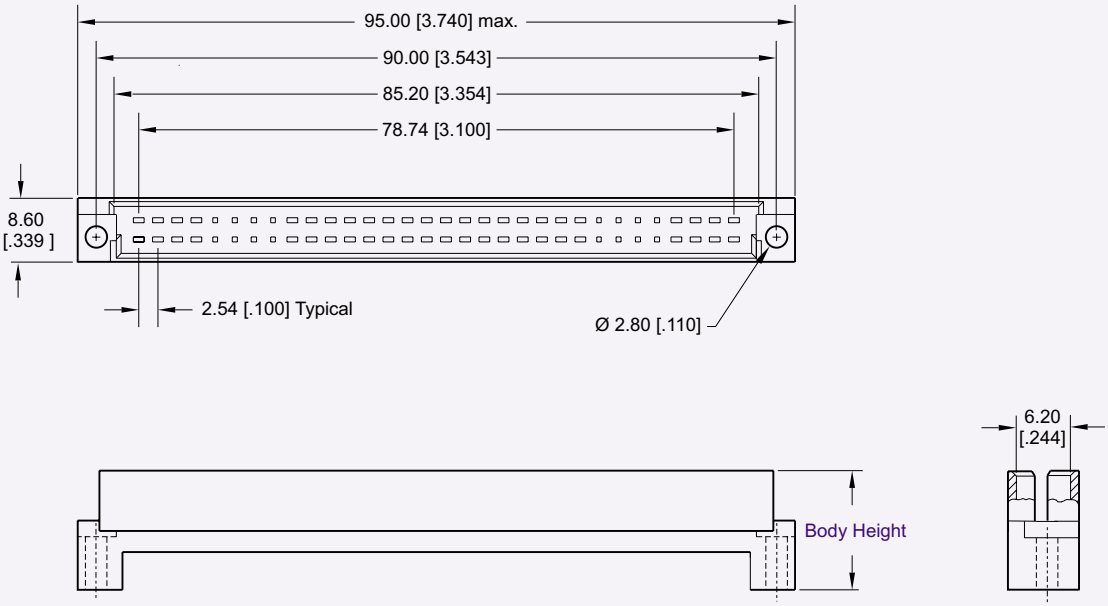

Dimensions are in mm [inches]

CONSULT FACTORY FOR CONNECTORS BUILT TO YOUR DESIGN

61 Series Pinless
Backplane Shroud Type R, R/2, R/3

Specifications

Insulator Material: Glass filled polyester, type PBT, 94 V-O, UL Rated.
Insulation Resistance: 10^{12} m Ohms
Dielectric Strength: 500 VDC (Sea Level)
Temperature Rating: -55° C to 125° C

Recognized under the recognized component Program of Underwriters Laboratories, Inc.

For drawings, technical data or samples, contact E.C.S. at 714/895-6351

Features

- Interference Fit Mounting eliminates the need for additional Mounting Hardware.
- Shrouds are removable, facilitating field repairability.
- Eight sizes accommodate 3 wrap-post lengths used in a wide range of PCBs.
- Shroud retained on .61 - .64 [.024 - .025] square posts.

The pin less backplane shroud provides board-to board interconnections from the DIN type R or C connector to a second DIN connector interface.
The shrouds accommodate a variety of extended contact lengths to provide a versatile, rear panel connection system.

PART NUMBERING

61 — X XXX — X

SERIES CODE
41612 Type R, R/2, R/3 Shroud

COLOR
B = Black
G = Gray / Natural

BODY STYLE
1 = R/3 (30 positions)
2 = R/2 (48 positions)
3 = R (96 positions)
4 = R extended (120 positions)
5 = R extended (150 positions)

BODY HEIGHT
350 = 08.89 [.350]
450 = 11.43 [.450]
500 = 12.70 [.500]
550 = 13.97 [.550]
600 = 15.24 [.600]
630 = 16.02 [.630]
680 = 17.27 [.680]
750 = 19.05 [.750]

Type R/2, 48 Positions

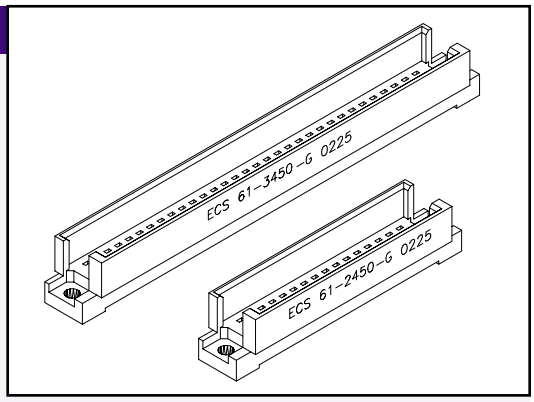

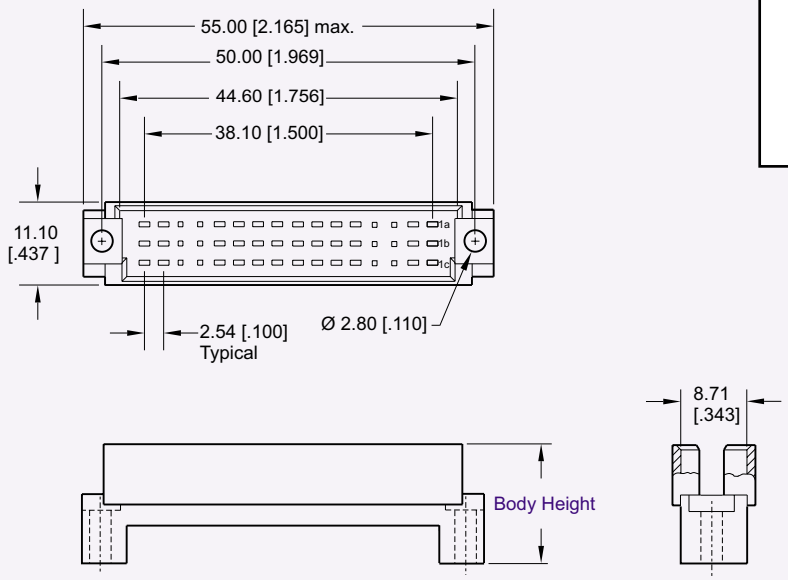

Type R and Extended R

Dim.	96 Contacts	120 Contacts	150 Contacts
A	78.74 [3.100]	99.06 [3.900]	124.46 [4.900]
B	85.20 [3.354]	105.51 [4.154]	130.91 [5.154]
C	90.00 [3.543]	110.31 [4.343]	135.71 [5.343]
D	95.00 [3.740]	115.32 [4.540]	140.72 [5.540]

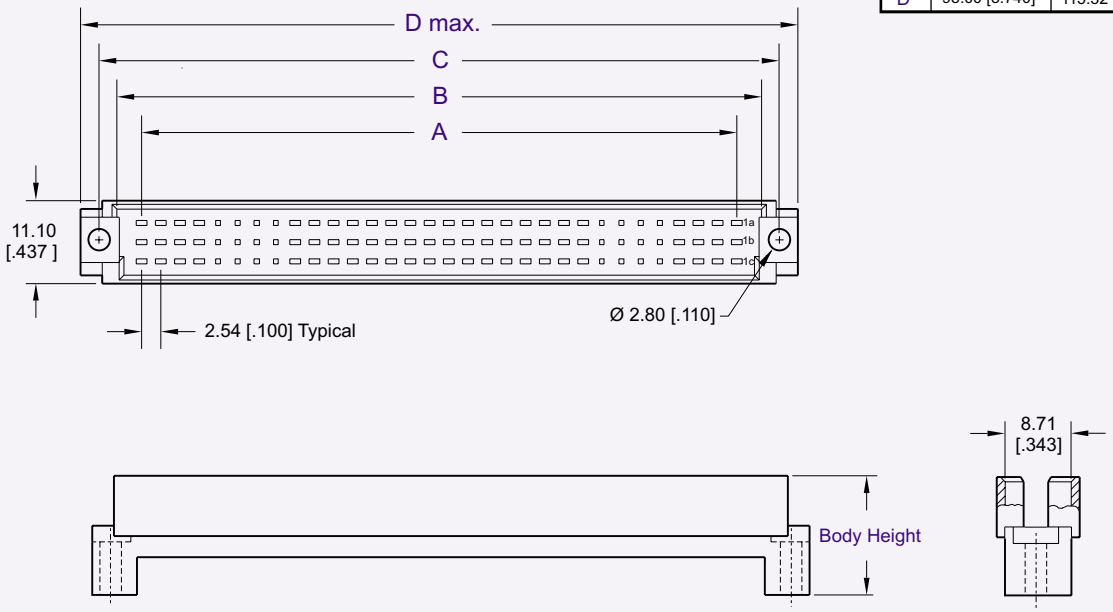

Dimensions are in mm [inches]

CONSULT FACTORY FOR CONNECTORS BUILT TO YOUR DESIGN

62 Series Pinless
Backplane Shroud Type RD, RD/2, RD/3

Specifications

Insulator Material: Glass filled polyester, type PBT, 94 V-O, UL Rated.
Insulation Resistance: 10^{12} m Ohms
Dielectric Strength: 500 VDC (Sea Level)
Temperature Rating: -55° C to 125° C

Recognized under the recognized component Program of Underwriters Laboratories, Inc.

For drawings, technical data or samples, contact E.C.S. at 714/895-6351

Features

- Interference Fit Mounting eliminates the need for additional Mounting Hardware.
- Shrouds are removable, facilitating field repairability.
- Eight sizes accommodate 3 wrap-post lengths used in a wide range of PCBs.
- Shroud retained on .61 - .64 [.024 - .025] square posts.

The pin less backplane shroud provides board-to board interconnections from the DIN type RD or CD connector to a second DIN connector interface.
The shrouds accommodate a variety of extended contact lengths to provide a versatile, rear panel connection system.

PART NUMBERING

62 — X XXX — X

SERIES CODE
Type RD, RD/2, RD/3 Shroud

BODY STYLE
1 = RD/3 (40 positions) not shown
2 = RD/2 (64 positions)
3 = RD (128 positions)

BODY HEIGHT
350 = 08.89 [.350]
450 = 11.43 [.450]
500 = 12.70 [.500]
550 = 13.97 [.550]
600 = 15.24 [.600]
630 = 16.02 [.630]
680 = 17.27 [.680]
750 = 19.05 [.750]

COLOR
B = Black
G = Gray / Natural

Type RD/2, 64 Positions

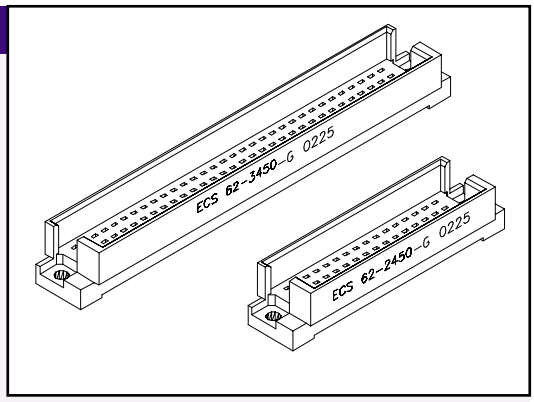

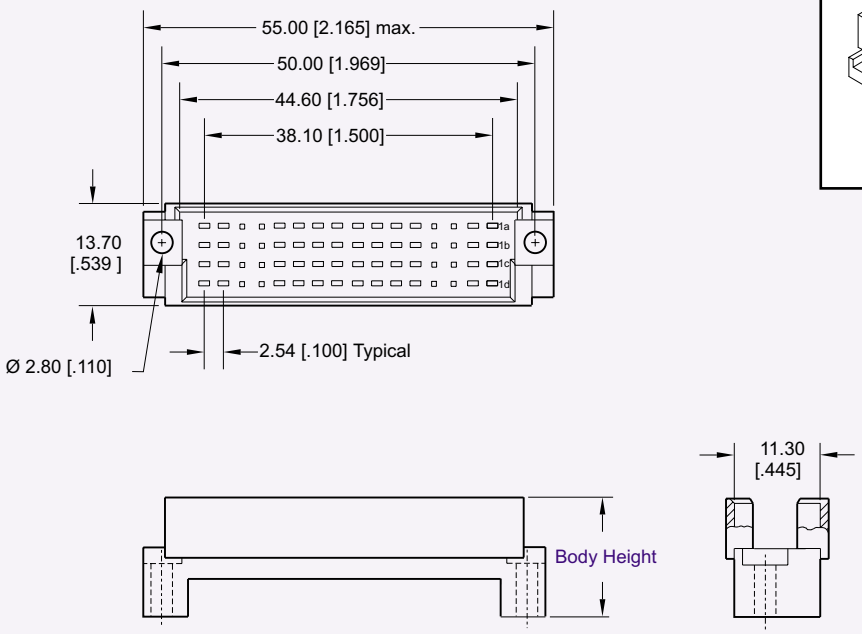

Type RD, 128 Positions

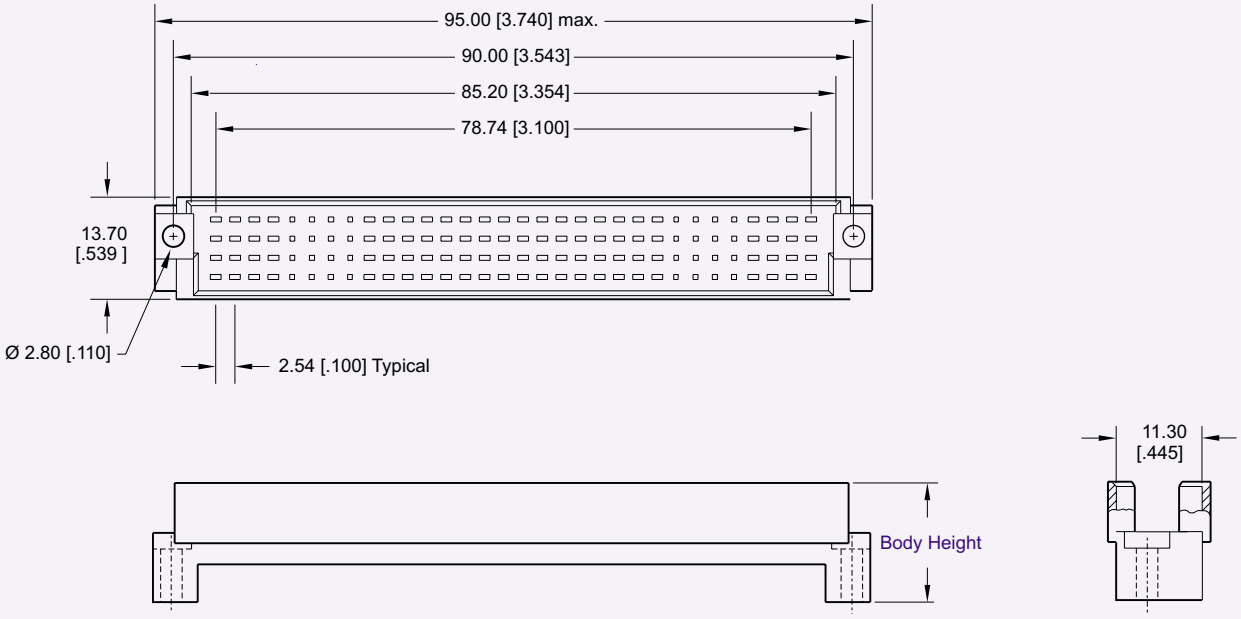

Dimensions are in mm [inches]

CONSULT FACTORY FOR CONNECTORS BUILT TO YOUR DESIGN

63 Series Pinless
Backplane Shroud Type TE, TE/2, TE/3

Specifications

Insulator Material: Glass filled polyester, type PBT, 94 V-O, UL Rated.
Insulation Resistance: 10^{12} m Ohms
Dielectric Strength: 500 VDC (Sea Level)
Temperature Rating: -55° C to 125° C

Recognized under the recognized component Program of Underwriters Laboratories, Inc.

For drawings, technical data or samples, contact E.C.S. at 714/895-6351

Features

- Interference Fit Mounting eliminates the need for additional Mounting Hardware.
- Shrouds are removable, facilitating field repairability.
- Eight sizes accommodate 3 wrap-post lengths used in a wide range of PCBs.
- Shroud retained on .61 - .64 [.024 - .025] square posts.

The pin less backplane shroud provides board-to board interconnections from the DIN type TE or E connector to a second DIN connector interface.
The shrouds accommodate a variety of extended contact lengths to provide a versatile, rear panel connection system.

PART NUMBERING

63 — X XXX — X

SERIES CODE
Type TE, TE/2, TE/3 Shroud

BODY STYLE
1 = TE/3 (50 positions) not shown
2 = TE/2 (80 positions)
3 = TE (160 positions)

BODY HEIGHT
350 = 08.89 [.350]
450 = 11.43 [.450]
500 = 12.70 [.500]
550 = 13.97 [.550]
600 = 15.24 [.600]
630 = 16.02 [.630]
680 = 17.27 [.680]
750 = 19.05 [.750]

COLOR
B = Black
G = Gray / Natural

Type TE/2, 80 Positions

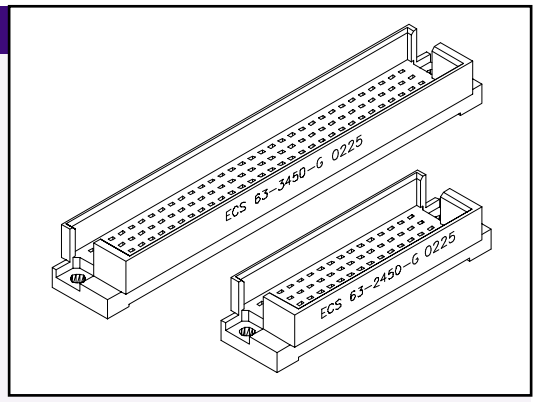

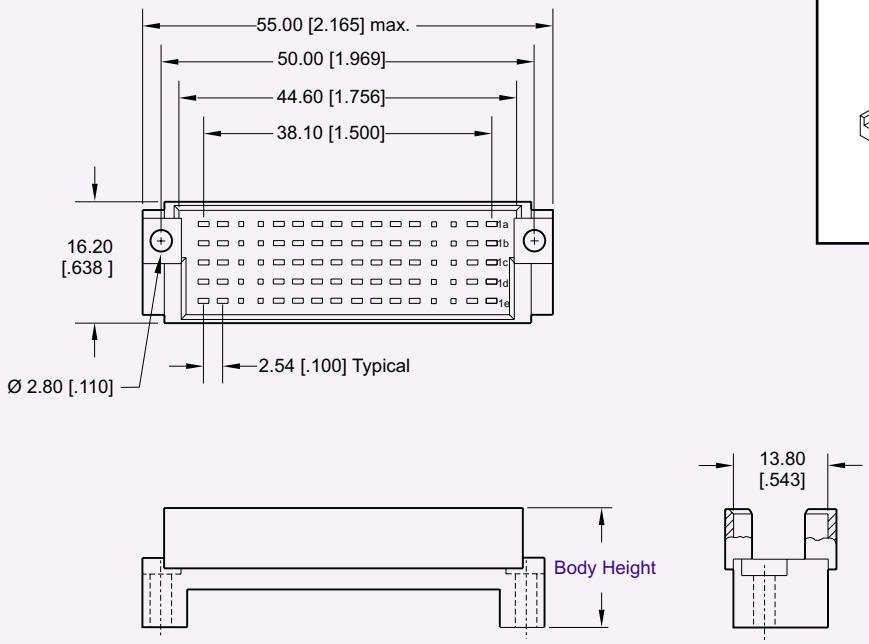

Type TE, 160 Postions

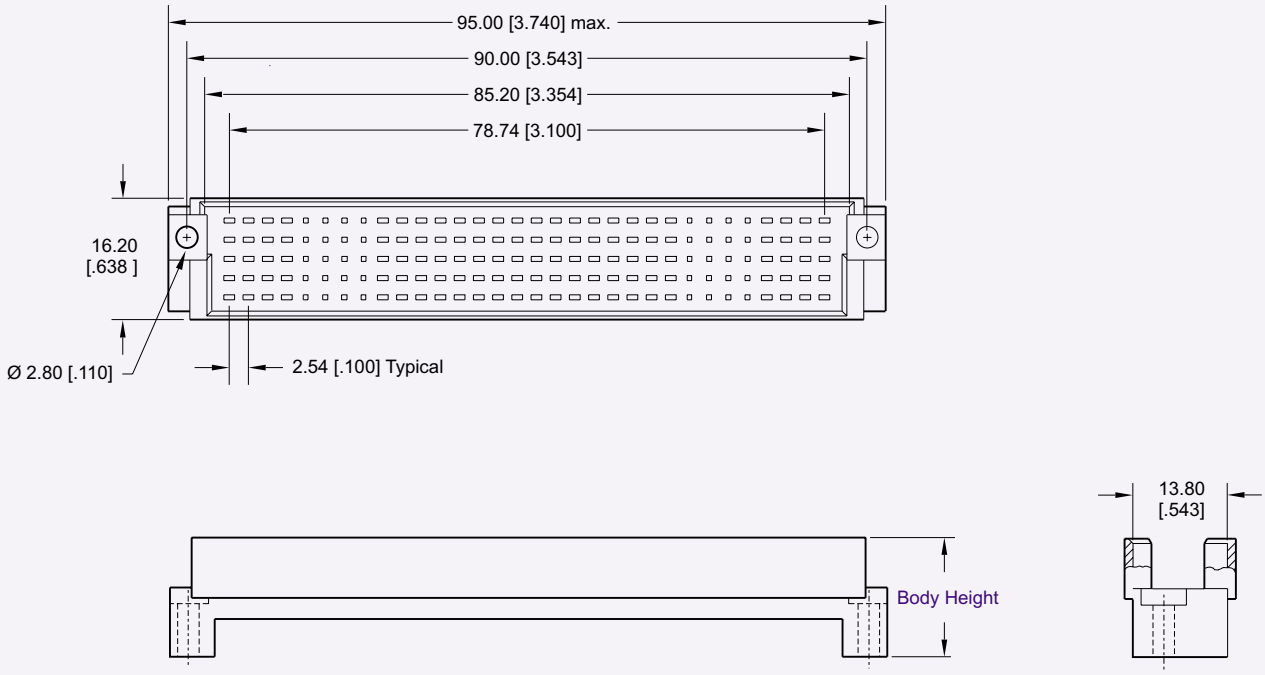

Dimensions are in mm [inches]

CONSULT FACTORY FOR CONNECTORS BUILT TO YOUR DESIGN

6400 Series IDC Shroud
For Type B and Q Connectors

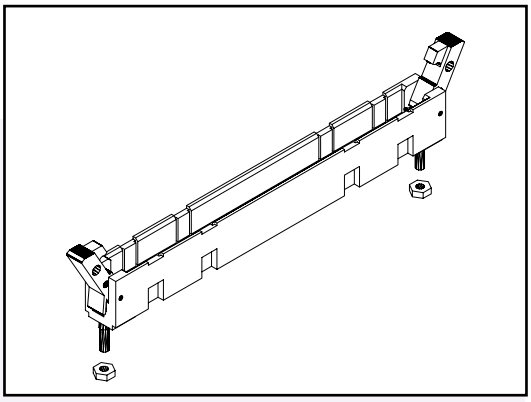

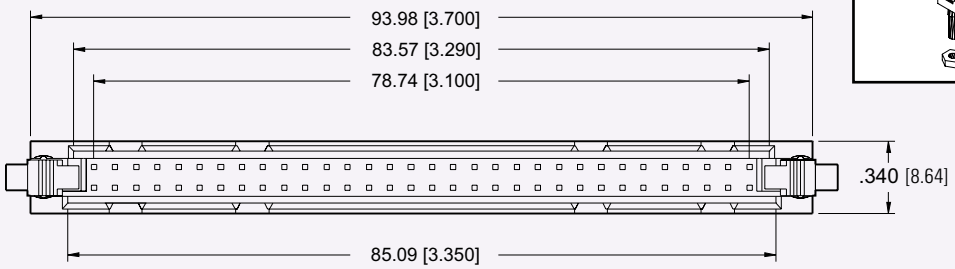

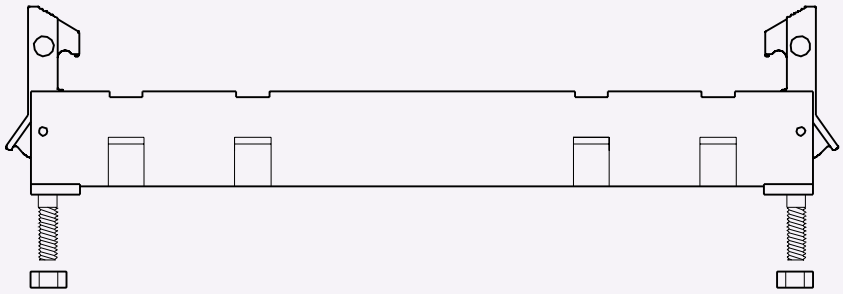

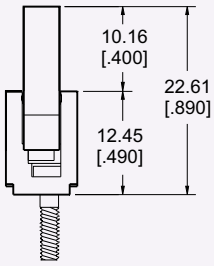

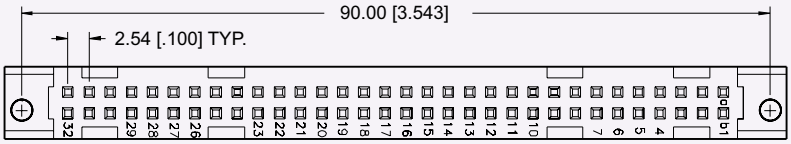

Dimensions are in mm [inches]

PART NUMBERING

6464 — X 1

SERIES CODE

NO. CONTACT PAIRS
1 = 32
2 = 16

MATERIAL TYPE
1 = Glass filled Polyester
Type PBT, 94 V-0 Rated

CONSULT FACTORY FOR CONNECTORS BUILT TO YOUR DESIGN

ELECTRONIC CONNECTOR SERVICE INC. 11880 WESTERN AVE. STANTON, CA 90680 TOLL FREE (877) ECS-CONN TEL (714) 895-6351 FAX (714) 894-1858
WWW.ECSCONN.COM

DIN 41612 CONTACTS

Technical Data

	Coaxial Contact 50	Coaxial Contact 75	High Voltage Contact	High Current Contact
MATERIAL				
Contact Material	Cu Alloy	Cu Alloy	Cu Alloy	Cu Alloy
Contact Plating	Gold over Nickel	Gold over Nickel	Gold over Nickel	Gold over Nickel
Performance Class	1: ≥ 500 Cycles	1: ≥ 500 Cycles	1: ≥ 500 Cycles	1: ≥ 500 Cycles
Body Material	Cu Alloy	Cu Alloy	Cu Alloy	Cu Alloy
Clip Material	Cu Alloy	Cu Alloy	Cu Alloy	Cu Alloy
Insulator Material	PTFE	PTFE	PTFE	
ELECTRICAL CHARACTERISTICS				
Contact Resistance	2.7 m max.	2.7 m max.	2.7 m max.	1.0 m max.
Insulation Resistance	10^7 M	10^7 M	10^7 M	
Operating Voltage	250 V eff.	250 V eff.	2.8 KV	
Test Voltage	750 V eff.	750 V eff.	4 KV	
Maximum current	2 Amp	2 Amp	2 Amp	10, 20, 30, 40 Amp
Frequency Range	0...2 Ghz	0...1.5 Ghz		
VSWR	≤ 1.23 typ.	≤ 1.23 typ.		
MECHANICAL CHARACTERISTICS				
Insertion Force	10 N max.	10 N max.	5 N max.	10 N max.
Withdrawal Force	0.9 N min.	0.9 N min.	0.5 N min.	1.6 N min.
ENVIRONMENTAL				
Temperature Range	-55° to +125° C	-55° to +125° C	-55° to +125° C	-55° to +125° C

COAXIAL CONTACTS

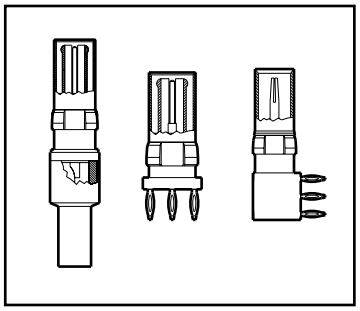

Page C41-C43

HIGH POWER CONTACTS

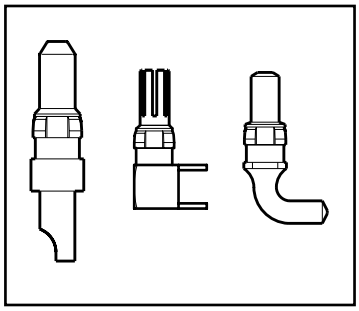

Page C44-C46

HIGH CURRENT CONTACTS

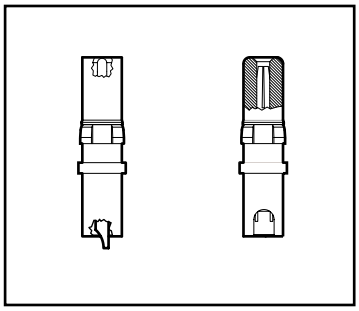

Page C47

5500 Series DIN Contacts
Coaxial Contacts Straight Cable Termination

P/N 55-2P-110-1

50 Plug
Crimp Snap In

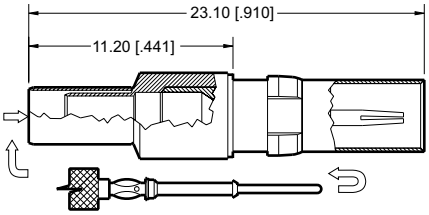

P/N 55-2S-110-1

50 Socket
Crimp Snap In

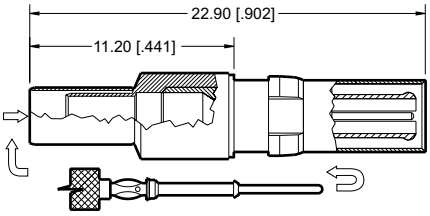

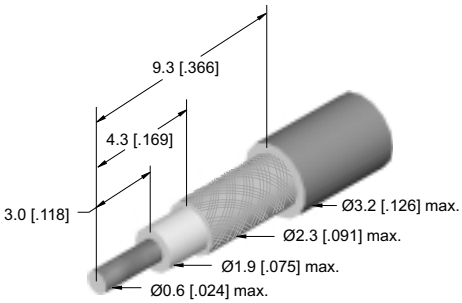

Recommended Cable:

RG 174U, RG 188AU, RG 316U

P/N 55-2P-103-1

50 Plug
Straight Cable Termination
Solder

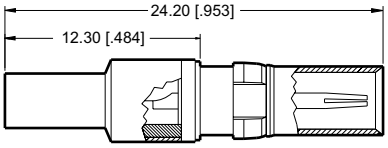

P/N 55-2S-103-1

50 Socket
Straight Cable Termination
Solder

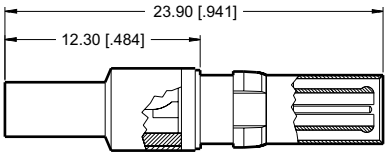

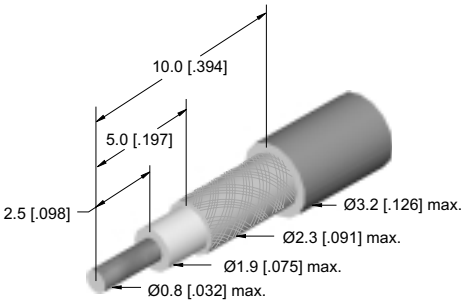

Recommended Cable:

RG 174BU, RG 188AU, RG 316U

P/N 55-3P-101-1

75 Plug
Straight Cable Solder

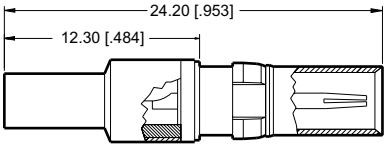

P/N 55-3S-101-1

75 Socket
Straight Cable Solder

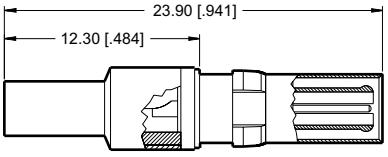

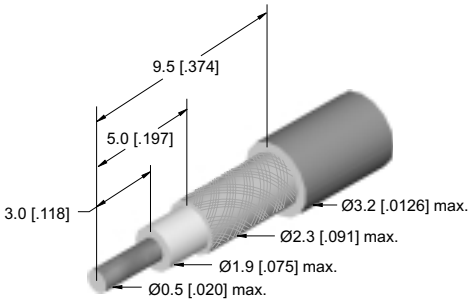

Recommended Cable:

RG 179BU, RG 187AU, Belden 9221

Dimensions are in mm[inch].

5500 Series DIN Contacts
Coaxial Contacts Straight PCB Termination

P/N 55-2P-211-1

50 Straight Plug
PCB Mount

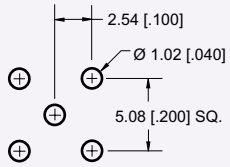

PCB Layout

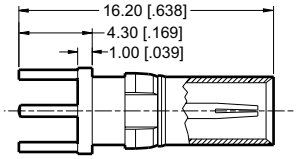

P/N 55-2S-304-1

50 Straight Socket
PCB Mount

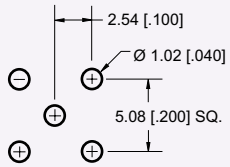

PCB Layout

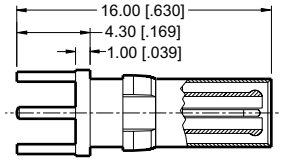

P/N 55-2P-235-1

50 Straight Plug
Press Fit

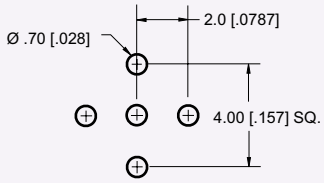

PCB Layout

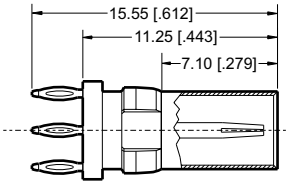

P/N 55-2S-224-1

50 Straight Socket
Press Fit

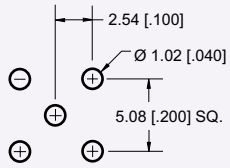

PCB Layout

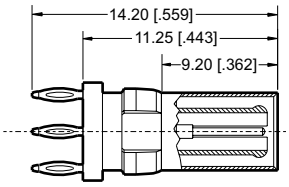

P/N 55-3P-301-1

75 Straight Plug
PCB Mount

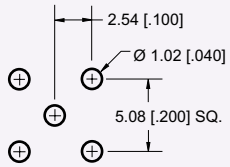

PCB Layout

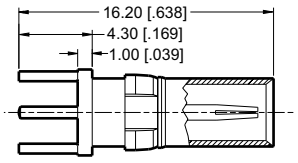

P/N 55-3S-301-1

75 Straight Socket
PCB Mount

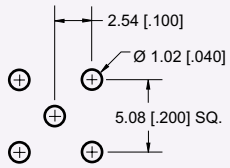

PCB Layout

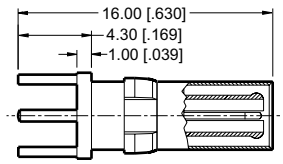

Dimensions are in mm[inch].

5500 Series DIN Contacts
Coaxial Contacts Right Angle PCB Termination

P/N 55-2P-304-1

50 Right Angle Plug
PCB Termination

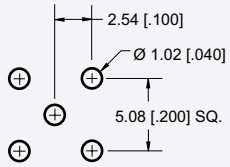

PCB Layout

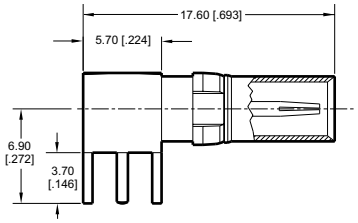

P/N 55-2S-201-1

50 Right Angle Socket
PCB Termination

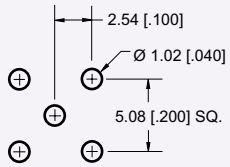

PCB Layout

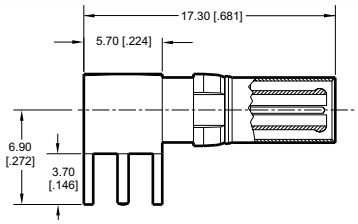

P/N 55-2P-385-1

50 Right Angle Plug
Press Fit

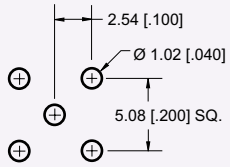

PCB Layout

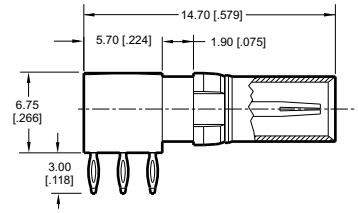

P/N 55-3P-304-1

75 Right Angle Plug
PCB Termination

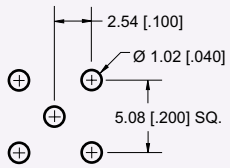

PCB Layout

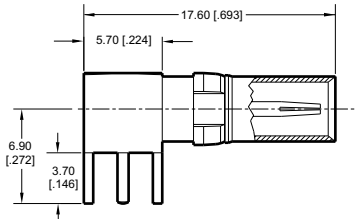

P/N 55-3S-304-1

75 Right Angle Socket
PCB Termination

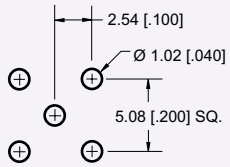

PCB Layout

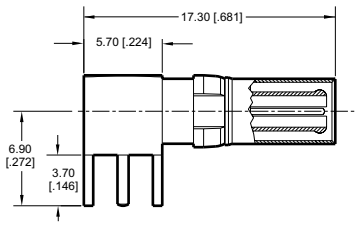

Dimensions are in mm[inch].

5500 Series DIN Contacts
High Power Contacts (cable)

Plug: Straight Solder	Max. Current	Wire Size	Cable Dimensions A	Cable Dimensions B
P/N 55-1P-104-1	10 A	AWG 16-20	7.80 [.307]	1.80 [.071]
P/N 55-1P-204-1	20 A	AWG 12-16	7.80 [.307]	2.70 [.106]
P/N 55-1P-404-1	40 A	AWG 8-12	7.80 [.307]	4.70 [.185]

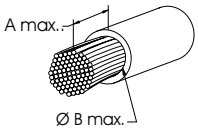

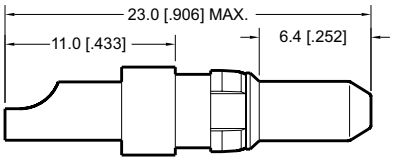

Plug: Extended Pin Straight Solder	Max. Current	Wire Size	Cable Dimensions A	Cable Dimensions B
P/N 55-1P-114-1	10 A	AWG 16-20	7.80 [.307]	1.80 [.071]
P/N 55-1P-214-1	20 A	AWG 12-16	7.80 [.307]	2.70 [.106]
P/N 55-1P-414-1	40 A	AWG 8-12	7.80 [.307]	4.70 [.185]

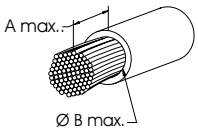

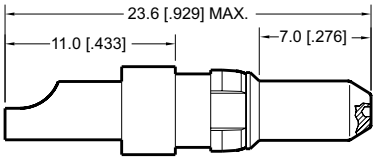

Socket: Straight Solder	Max. Current	Wire Size	Cable Dimensions A	Cable Dimensions B
P/N 55-1S-104-1	10 A	AWG 16-20	7.80 [.307]	1.80 [.071]
P/N 55-1S-204-1	20 A	AWG 12-16	7.80 [.307]	2.70 [.106]
P/N 55-1S-404-1	40 A	AWG 8-12	7.80 [.307]	4.70 [.185]

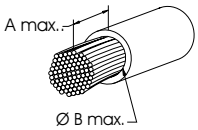

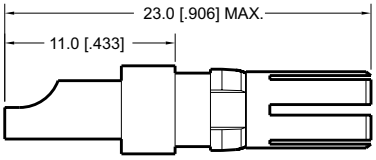

Plug: Straight Crimp	Max. Current	Wire Size	Cable Dimensions A	Cable Dimensions B
P/N 55-1P-101-1	10 A	AWG 16-20	7.80 [.307]	1.70 [.067]
P/N 55-1P-201-1	20 A	AWG 12-16	7.80 [.307]	2.60 [.102]
P/N 55-1P-301-1	30 A	AWG 10-14	7.80 [.307]	3.70 [.146]
P/N 55-1P-401-1	40 A	AWG 8-12	7.80 [.307]	4.60 [.181]

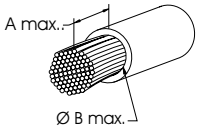

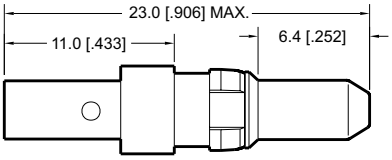

Plug: Extended Pin Straight Crimp	Max. Current	Wire Size	Cable Dimensions A	Cable Dimensions B
P/N 55-1P-111-1	10 A	AWG 16-20	7.80 [.307]	1.70 [.071]
P/N 55-1P-211-1	20 A	AWG 12-16	7.80 [.307]	2.60 [.102]
P/N 55-1P-311-1	30 A	AWG 10-14	7.80 [.307]	3.70 [.146]
P/N 55-1P-411-1	40 A	AWG 8-12	7.80 [.307]	4.60 [.181]

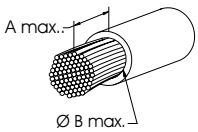

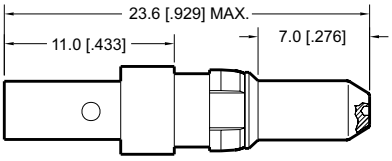

Socket: Straight Crimp	Max. Current	Wire Size	Cable Dimensions A	Cable Dimensions B
P/N 55-1S-101-1	10 A	AWG 16-20	7.80 [.307]	1.70 [.071]
P/N 55-1S-201-1	20 A	AWG 12-16	7.80 [.307]	2.60 [.102]
P/N 55-1S-301-1	30 A	AWG 10-14	7.80 [.307]	3.70 [.146]
P/N 55-1S-401-1	40 A	AWG 8-12	7.80 [.307]	4.60 [.181]

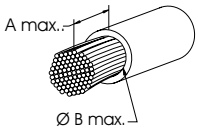

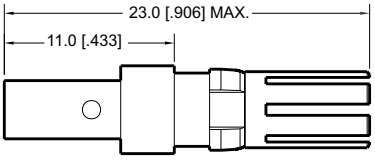

5500 Series DIN Contacts
High Power Contacts (PCB Mount)

Plug: Right Angle	Max. Current	Dim. A
P/N 55-1P-203-1	20 Amp	Ø 2.9 [.114]
P/N 55-1P-403-1	40 Amp	Ø 3.8 [.150]

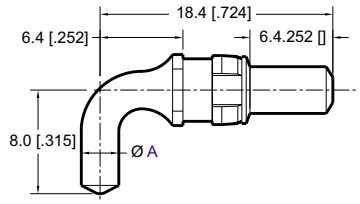

Socket: Right Angle	Max. Current	Dim. A
P/N 55-1S-203-1	20 Amp	Ø 2.9 [.114]
P/N 55-1S-403-1	40 Amp	Ø 3.8 [.150]

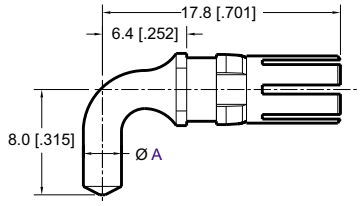

Socket: Straight PCB Termination	Max. Current	PCB Hole Size Requirement
P/N 55-1S-207-1	20 Amp	Ø 3.00 [.118]

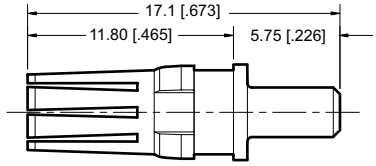

Socket: Straight PCB Press Fit		
P/N 55-1S-208-1	30 Amp	0 3.00 [.118]

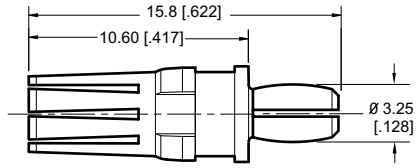

Socket: Straight PCB Termination	Max. Current	PCB Hole Size Requirement
P/N 55-1S-217-1	40 Amp	0 4.80 [.189]

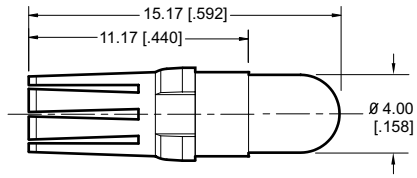

Plug: Straight PCB Termination	Max. Current	PCB Hole Size Requirement
P/N 55-1P-218-1	20 Amp	0 3.00 [.118]

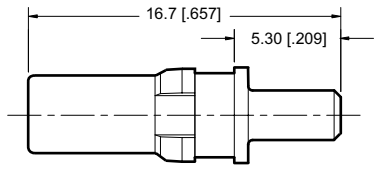

Dimensions are in mm[inch].

5500 Series DIN Contacts
High Voltage Contacts

P/N 55-1P-901-1	USABLE CABLES
Plug: Straight Cable Termination	≤ AWG 20

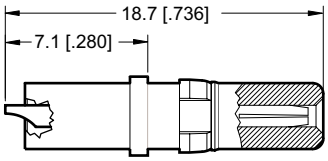

P/N 55-1S-901-1	USABLE CABLES
Socket: Straight Cable Termination	≤ AWG 20

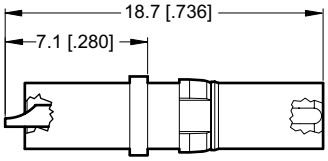

P/N 55-1P-902-1	USABLE CABLES
Plug: Right Angle Cable Termination	≤ AWG 20

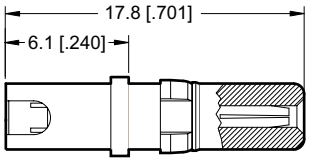

P/N 55-1S-902-1	USABLE CABLES
Socket: Right Angle Cable Termination	≤ AWG 20

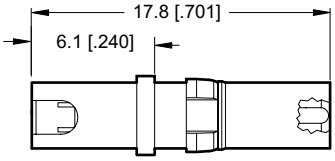

Dimensions are in mm[inch].

DIN 41612
PRESS IN TOOLS FOR MALE CONNECTORS

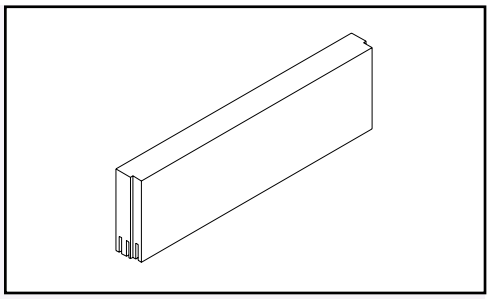

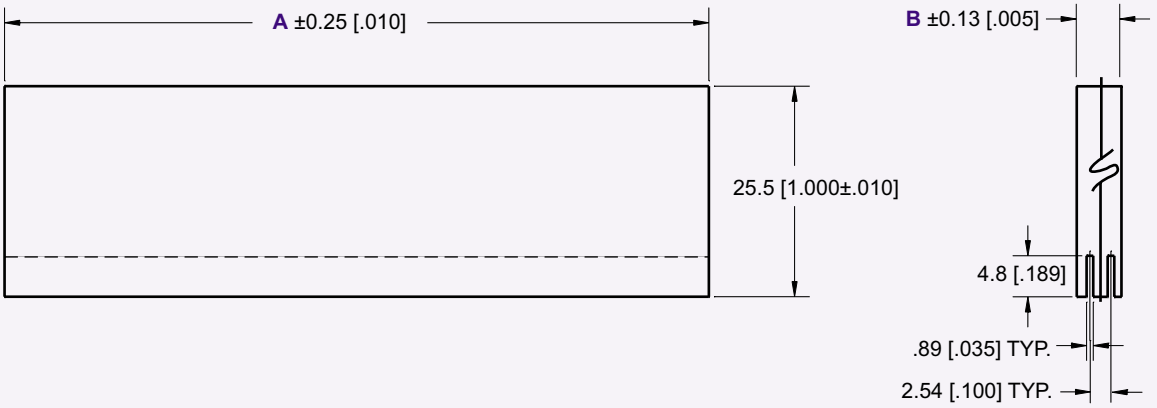

Dimensions are in mm[inch].

TOOL PART NUMBER	A	B	CONNECTOR TYPE
60-20T	29.21 [1.150]	5.72 [.225]	Q/3
60-32T	44.45 [1.750]	5.72 [.225]	Q/2
60-48T	85.09 [3.350]	5.72 [.225]	Q
61-30T	29.21 [1.150]	8.26 [.325]	R/3
61-48T	44.45 [1.750]	8.26 [.325]	R/2
61-96T	85.09 [3.350]	8.26 [.325]	R
61-120T	105.41 [4.150]	8.26 [.325]	R ext. 120
61-150T	130.81 [5.150]	8.26 [.325]	R ext. 150
62-64T	44.45 [1.750]	10.80 [.425]	RD/2
62-128T	85.09 [3.350]	10.80 [.425]	RD
63-80T	44.45 [1.750]	13.34 [.525]	TE/2
63-160T	85.09 [3.350]	13.34 [.525]	TE

Standard Press In Tool for Press Fit Connectors are listed above .
Consult Factory for Custom Press In Tool Information, or if EM/LB - LM/EB Contacts are Required.

E-Z met™ 2mm HM

Specifications

Contact Spacing: 2.00mm
Insulator Material: PBT 30% Glass filled UL 94 V-O
Contact Material: Phosphor Bronze Alloy
Shield Material: Phosphor Bronze Alloy
Contact Plating:
- Contact Area: 0.80mm Gold /1.30mm Nickel
- Compliant Area: 1-2mm Tin Lead/1.30mm Nickel
- Rear Terminal:
  - Level 1: 0.40mm Gold / 1.30mm Nickel
  - Level 2: 0.80mm Gold /1.30mm Nickel

Shield Plating:
- Contact Area: 0.80mm Gold
- Compliant Area: 0.50mm Tin Lead

Temperature Range: -55 C to +125 C
Contact Resistance: 20 M Ohm Max.
Insulation Resistance: 10^4 M Ohm Max.
Working Current: 1.5 ADC (Signal)
Test Voltage: AC 750 V Min.
Compliant Section:
- Insertion Force: 100 N per contact Max.
- Withdrawal Force: 20 N per contact Min.

Mating Force: .75 N per pin Max.
Withdrawal Force: .15 N per pin Max.
PCB Hole Size Requirements:
- Drilled Hole Diameter: 0.7 ± 0.02mm
- Finished Hole Diameter: 0.6 ± 0.05mm

Recommended PCB Thickness: 1.6mm Min.

Recognized under the recognized component Program of Underwriters Laboratories, Inc.

For drawings, technical data or samples, contact E.C.S. at 714/895-6351

Maximum Circuit Density

Using the specified finished through hole diameter of 0.6 ± 0.05 mm, with an appropriate annular ring, the remaining distance between the rings is approximately 1 mm. This will allow for either two equally spaced traces of .2 mm wide, or three equally spaced traces of 0.14 mm wide. Typical patterns are shown on the right.

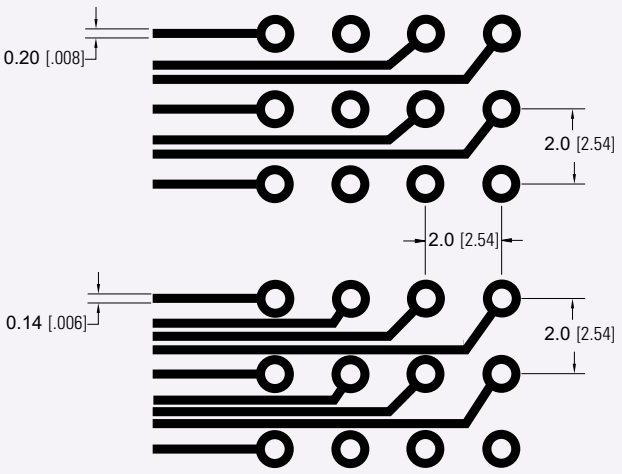

Connector System Modularity and Configuration

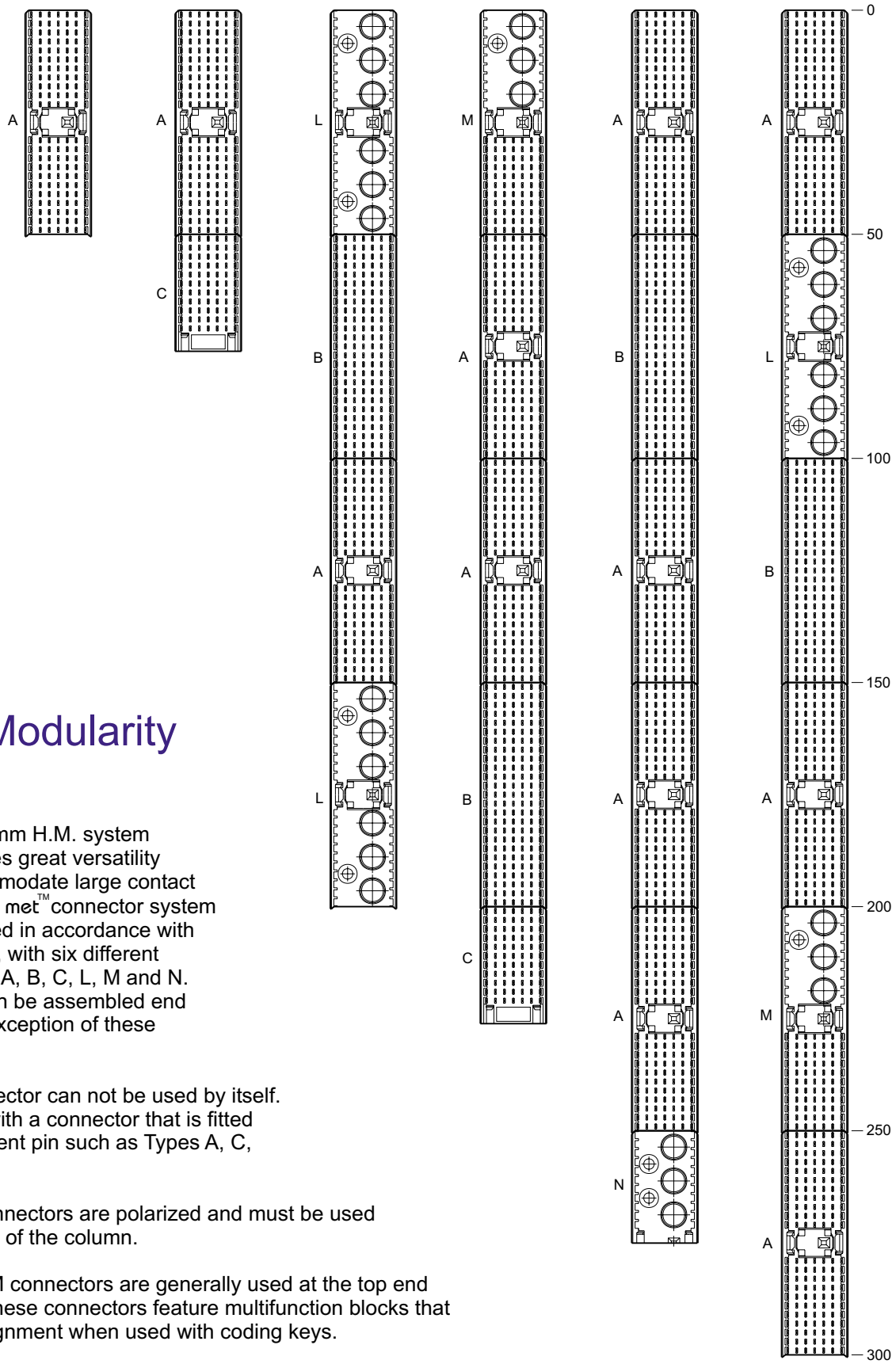

System Modularity

The Є-Z met™ 2.0 mm H.M. system from ECS provides great versatility in order to accommodate large contact densities. The Є-Z met™ connector system has been designed in accordance with IEC 61076-4-101, with six different connector types: A, B, C, L, M and N. All connectors can be assembled end to end, with the exception of these general rules.

The Type B connector can not be used by itself. It must be used with a connector that is fitted with a pre-alignment pin such as Types A, C, L, M, or N.

Type C and N connectors are polarized and must be used at the bottom end of the column.

Types A, L, and M connectors are generally used at the top end of the column. These connectors feature multifunction blocks that assure proper alignment when used with coding keys.

Є-Z met™ 2mm HM
Type A-25 Header, Straight

Type A-25, Vertical Male 110 Pin Connector

The Є-Z met™ type A-25 vertical male connector provides 110 signal contacts and an optional 44-ground shield contacts in a 5+2, 25 position configuration, with 3 positions for a multifunction cavity. This connector is typically used in the P1 and P4 positions of a CompactPCI® backplane. The type A connector is designed to be used by itself or together with type B, C, L, M or N Є-Z met™ connectors.

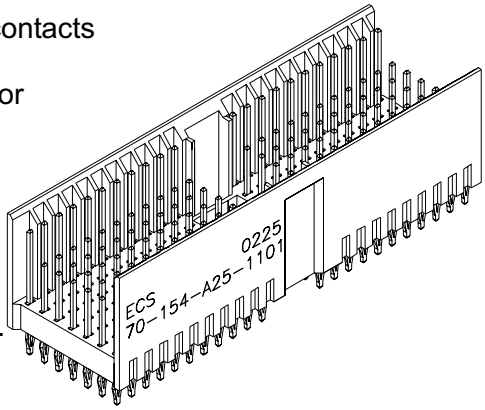

ECS offers 15 different standard tail lengths to choose from to provide various premate and midplane configurations. Contacts can be selectively loaded to accommodate customer specific applications. Custom tail lengths and mold configurations are also available. For non standard loading, or custom applications please refer to the fax request form on page D-35.

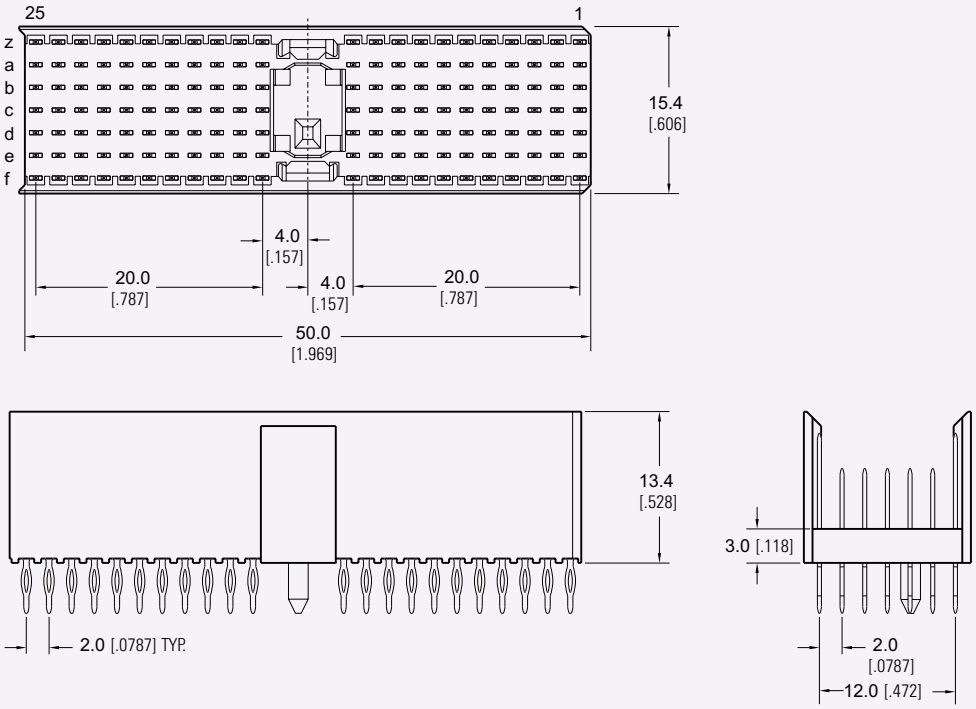

Dimensions are in mm [inch]

BOARD LAYOUT

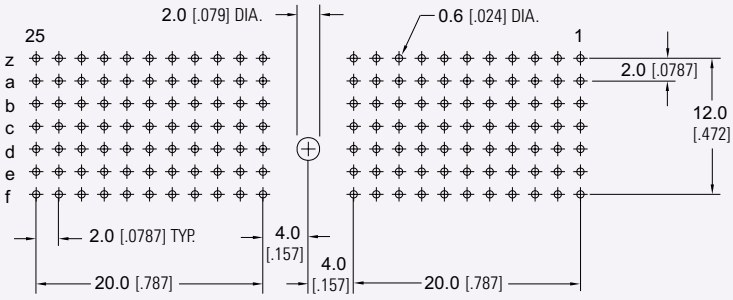

Identification	Number of Contacts	Contact Mating Side	Termination Side	Part Number	Contact Configuration
Type A	110	8.2 [.323]	13.0 [.512]	70-100-A25-1001 **70-100-A25-2001**	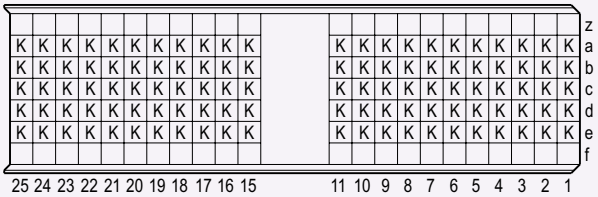
Type A P4 with Peg	154	9.7 [.382] 11.2 [.441]	14.5 [5.71] 16.0 [.630]	70-154-A25-1001 **70-154-A25-2001**	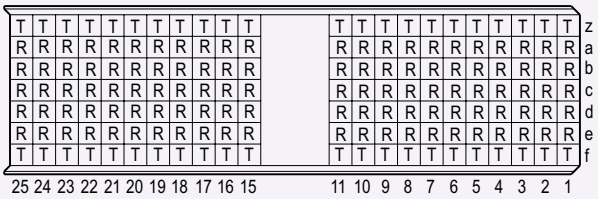
Type A with Peg P1 CompactPCI®	154	8.2 [.323] 9.7 [.382] 11.2 [.441]	3.7 [.146]	70-154-A25-1101	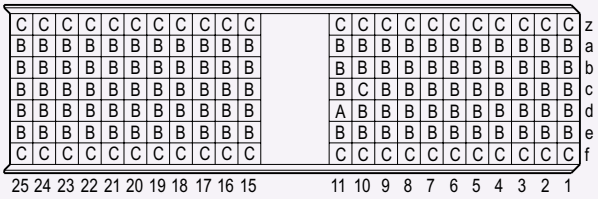
Type A CompactPCI® P1 Hot Swap	154	8.2 [.323] 9.7 [.382] 11.2 [.441]	3.7 [.146]	70-154-A25-1201	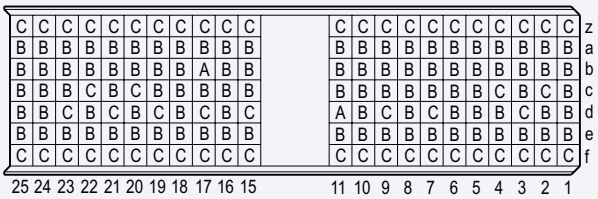
Type A without Peg CompactPCI® computer telephony P4 telecom	100	8.2 [.323] 9.7 [.382] 11.2 [.441]	13.0 [.512] 14.5 [571] 16.0 [.630]	70-100-A25-1101 **70-100-A25-2101**	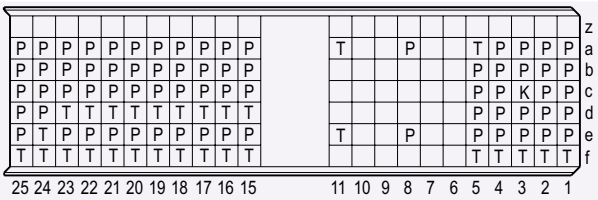
Type A without Peg CompactPCI® computer telephony P4 telecom	100	8.2 [.323] 9.7 [.382] 11.2 [.441]	3.7 [.146]	70-100-A25-1201	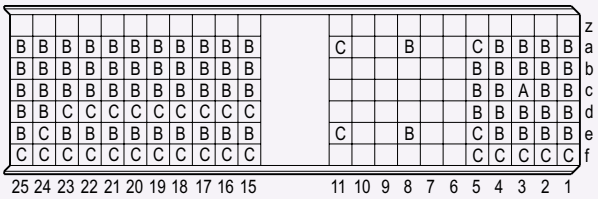

Bold part numbers are for Level 2 plating.

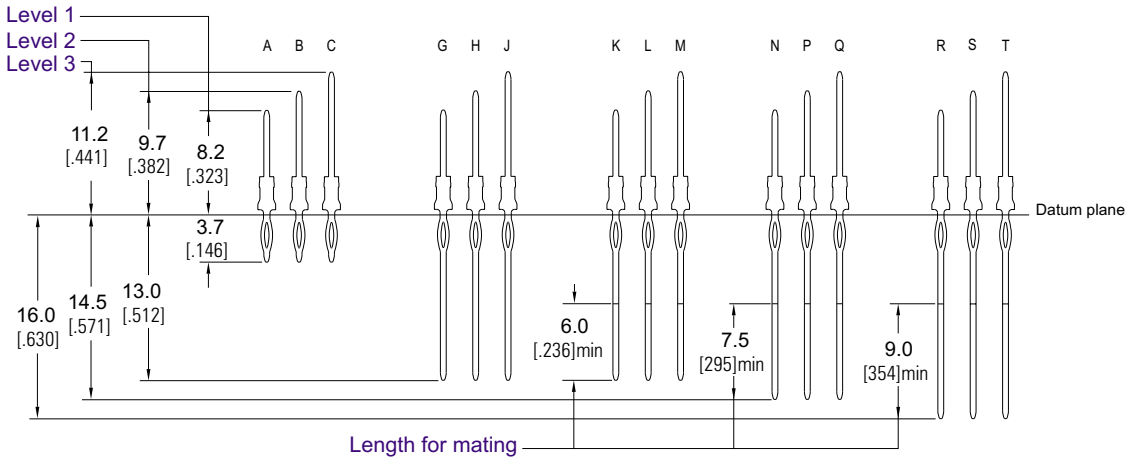

Є-Z met™ 2mm HM
Type B-25 Header, Straight

Type B-25, Vertical Male 125 Pin Connector

The Є-Z met™ type B-25 vertical male connector provides 125 signal contacts and an additional 50 ground shield contacts in a 5+2, 25 position configuration. This module is not designed Nto be used alone, but can be used together with either a type A, C, L, M or N Є-Z met™ connector.

ECS offers 15 different standard tail lengths to choose from to provide various premate and midplane configurations. Contacts can be selectively loaded to accommodate customer specific applications. Custom tail lengths and mold configurations are also available. For non standard loading, or custom applications please refer to the fax request form on page D-35.

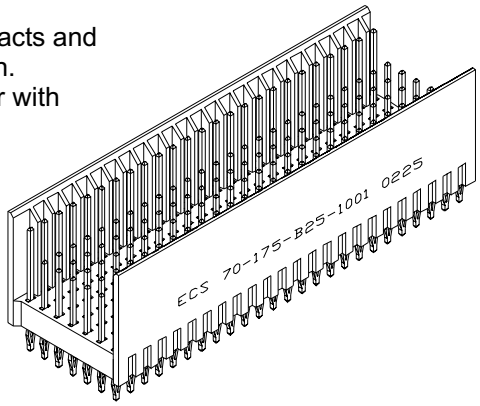

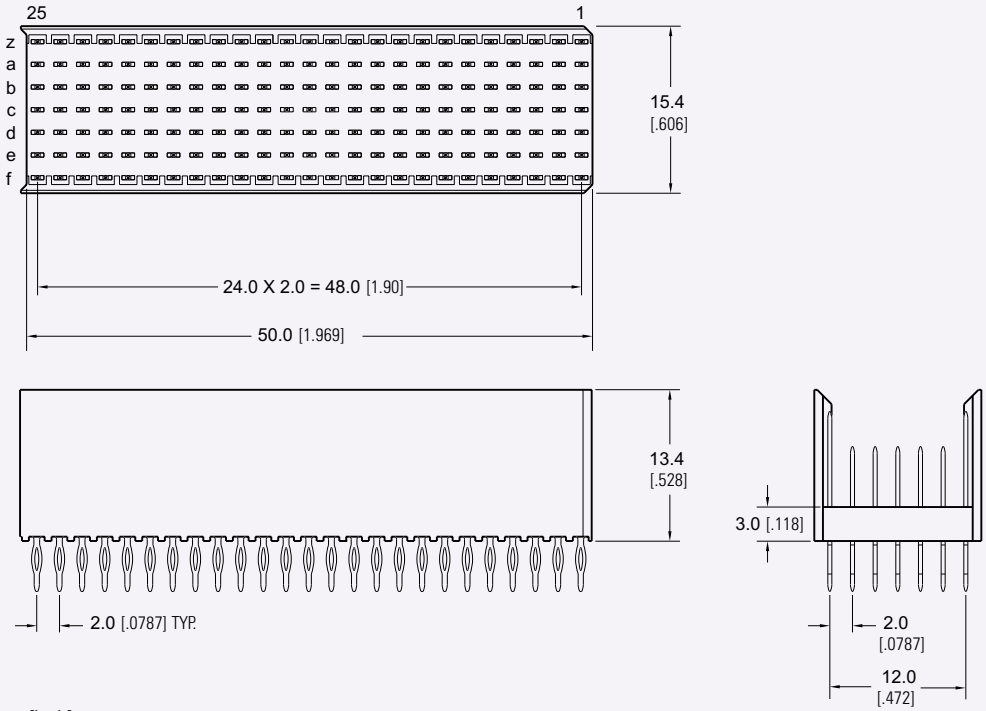

Dimensions are in mm [inch]

BOARD LAYOUT

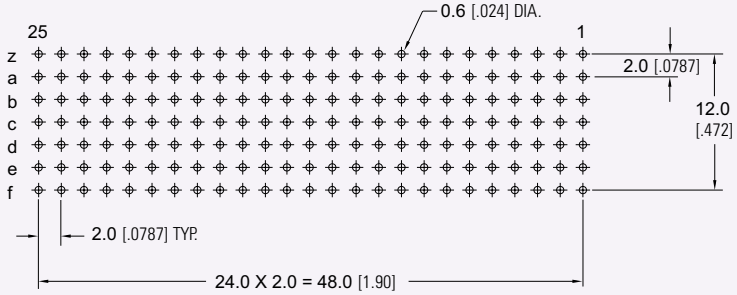

Identification	Number of Contacts	Contact Mating Side	Termination Side	Part Number	Contact Configuration
Type B	125	8.2 [.323]	3.7 [.146]	70-125-B25-1001	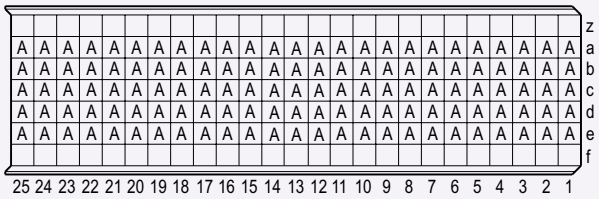
Type B	175	8.2 [.323] 11.2 [.441]	3.7 [.146]	70-175-B25-1001	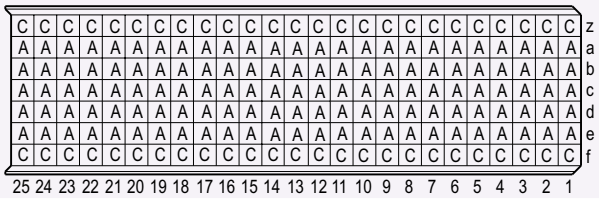
Type B	175	8.2 [.323] 9.7 [.382] 11.2 [.441]	3.7 [.146]	70-175-B25-1101	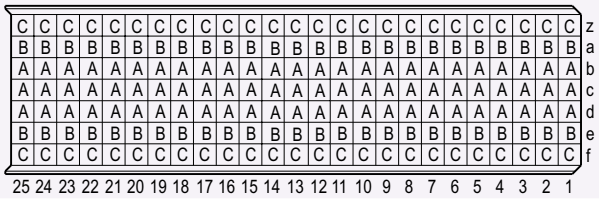
Type B	175	9.7 [.382] 11.2 [.441]	3.7 [.146]	70-175-B25-1201	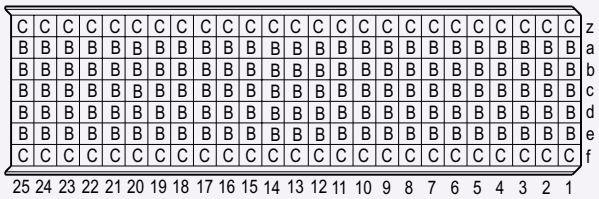
Type B	125	9.7 [.382]	3.7 [.146]	70-125-B25-1101	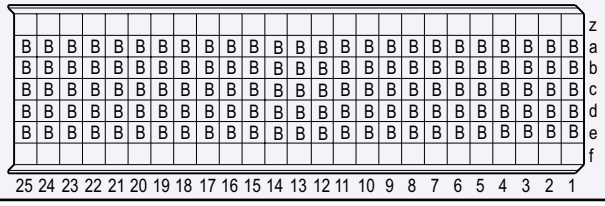

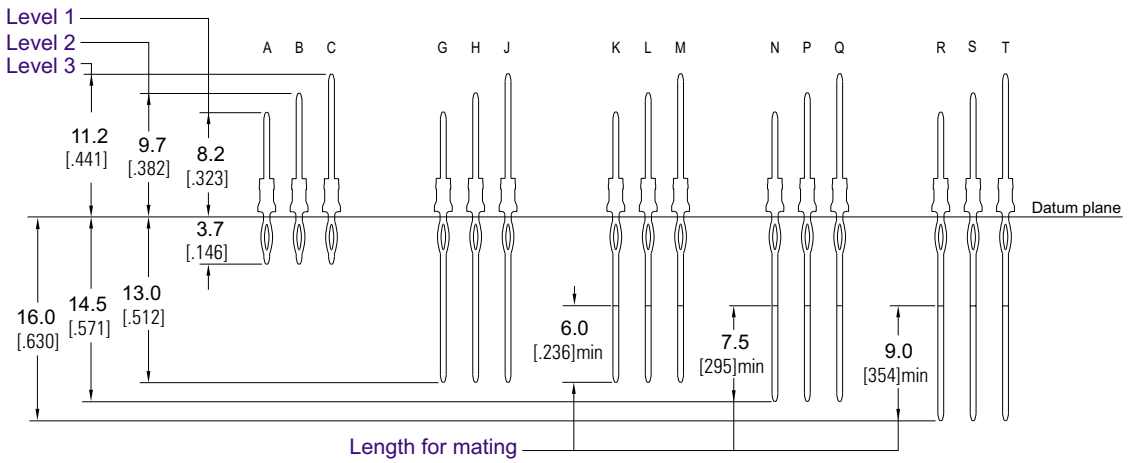

Є-Z met™ 2mm HM
Type B-22 Header, Straight

Type B-22, Vertical Male 110 Pin Connector

The Є-Z met™ type B-22 vertical male connector provides 110 signal contacts and an additional 44 ground shield contacts in a 5+2, 22 position configuration. The B-22 connector is used in the P2 and P5 positions of the CompactPCI® backplane. This module is not designed to be used alone,but can be used together with either a type A, C, L, M or N Є-Z met™ connector.

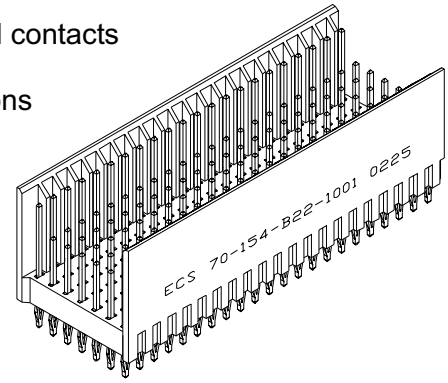

ECS offers 15 different standard tail lengths to choose from to provide various premate and mid-plane configurations. Contacts can be selectively loaded to accommodate customer specific applications. Custom tail lengths and mold configurations are also available. For non standard loading, or custom applications please refer to the fax request form on page D-35.

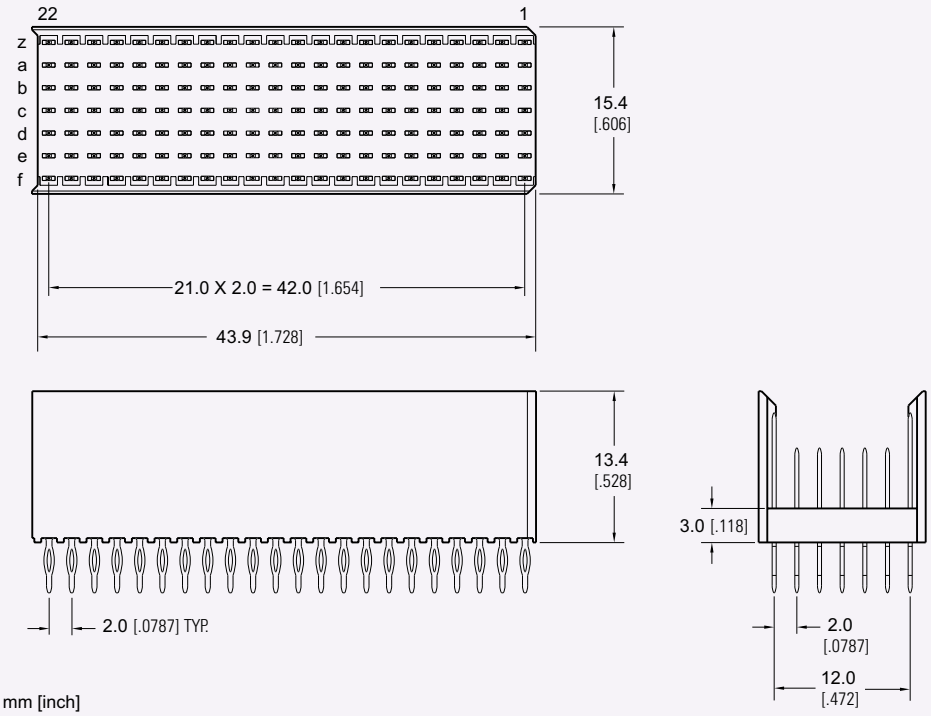

Dimensions are in mm [inch]

BOARD LAYOUT

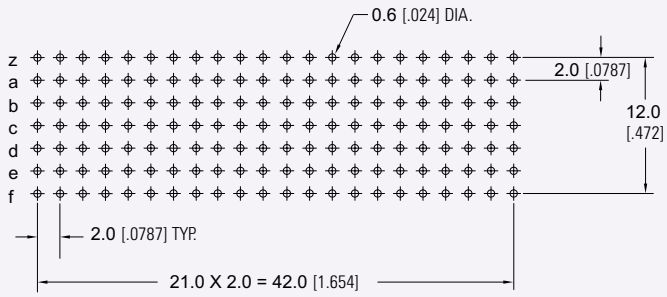

Identification	Number of Contacts	Contact Mating Side	Termination Side	Part Number	Contact Configuration
Type B	110	8.2 [.323]	3.7 [.146]	70-110-B22-1001	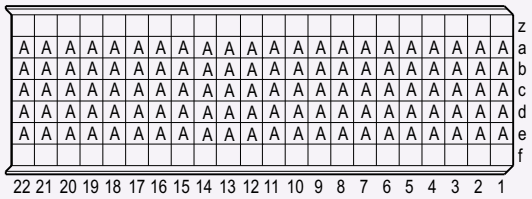
Type B	154	8.2 [.323] 11.2 [.441]	3.7 [.146]	70-154-B22-1001	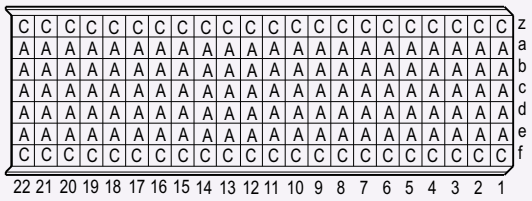
Type B CompactPCI® P2	154	9.7 [.382] 11.2 [.441]	3.7 [.146]	70-154-B22-1101	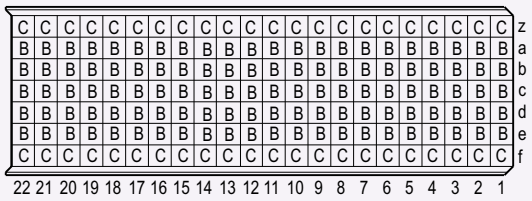
Type B, CompactPCI® computer telephony P2 telecom	132	8.2 [.323] 9.7 [.382] 11.2 [.441]	13.0 [.512] 14.5 [.571] 13.0 [.512]	70-132-B22-1001 **70-132-B22-2001**	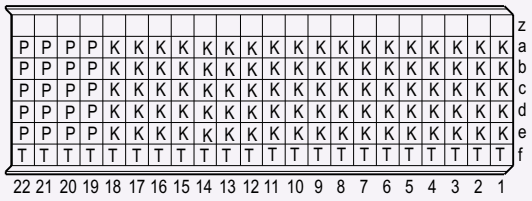
Type B, CompactPCI® P5	154	8.2 [.323] 11.2 [.441]	16.0 [.630]	70-154-B22-1301 **70-154-B22-2301**	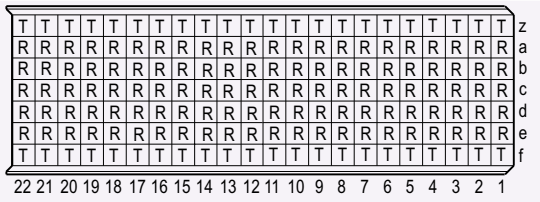

Bold part numbers are for Level 2 plating.

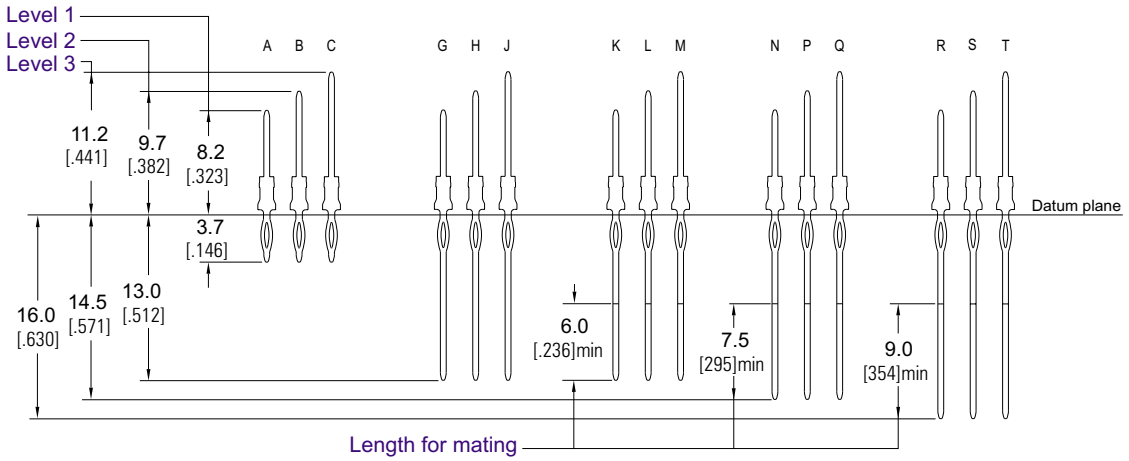

Є-Z met™ 2mm HM
Type B-19 Header, Straight

Type B-19, Vertical Male 95 Pin Connector

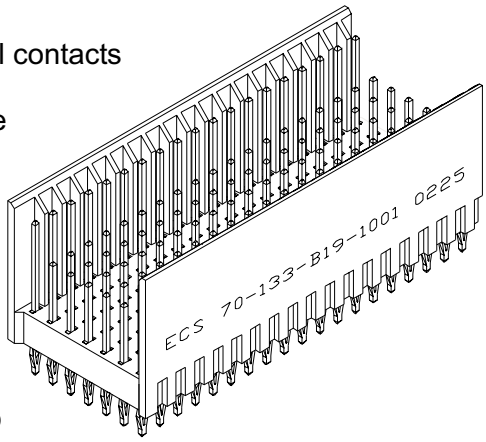

The Є-Z met™ type B-19 vertical male connector provides 95 signal contacts and an additional 38 ground shield contacts in a 5+2, 19 position configuration. The B-19 connector is used in the P3 location of the CompactPCI® backplane. This connector can also be used for VME applications in the J0 position. This module is not designed to be used alone, but can be used together with either a type A, C, L, M or N Є-Z met™ connector.

ECS offers 15 different standard tail lengths to choose from to provide various pre mate and mid plane configurations. Contacts can be selectively loaded to accommodate customer specific applications. Custom tail lengths and mold configurations are also available. For non standard loading, or custom applications please refer to the fax request form on page D-35.

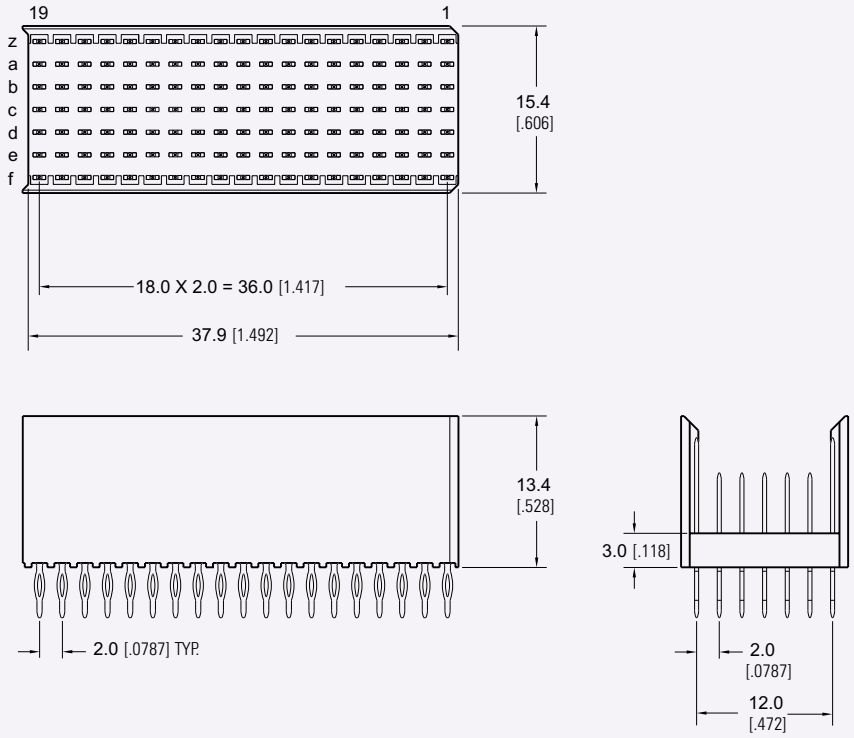

Dimensions are in mm [inch]

BOARD LAYOUT

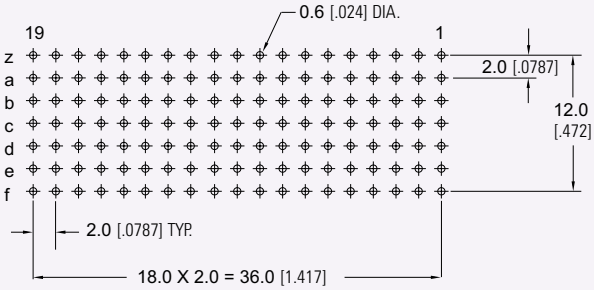

Identification	Number of Contacts	Contact Mating Side	Termination Side	Part Number	Contact Configuration
Type B	95	8.2 [.323]	3.7 [.146]	70-95-B19-1001	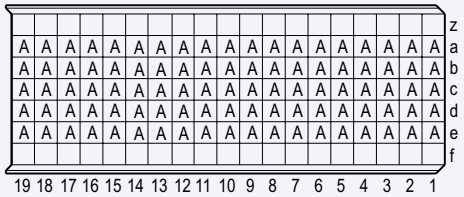
Type B	133	8.2 [.323] 11.2 [.441]	3.7 [.146]	70-133-B19-1001	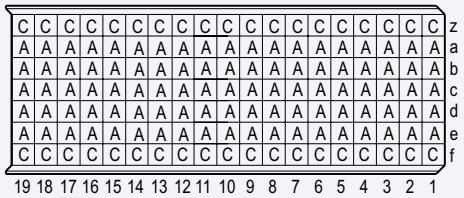
Type B	133	9.7 [.382] 11.2 [.441]	3.7 [.146]	70-133-B19-1101	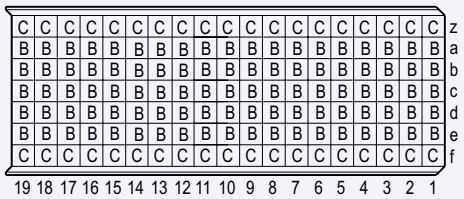
Type B	95	8.2 [.323]	13.0 [.512]	70-95-B19-1201 **70-95-B19-2201**	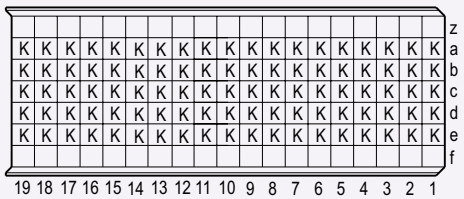
Type B P3	133	8.2 [.323] 11.2 [.441]	3.7 [.146]	70-133-B19-1201 **70-133-B19-2201**	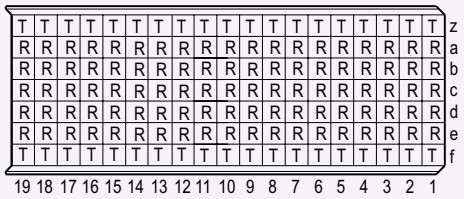

Bold part numbers are for Level 2 plating.

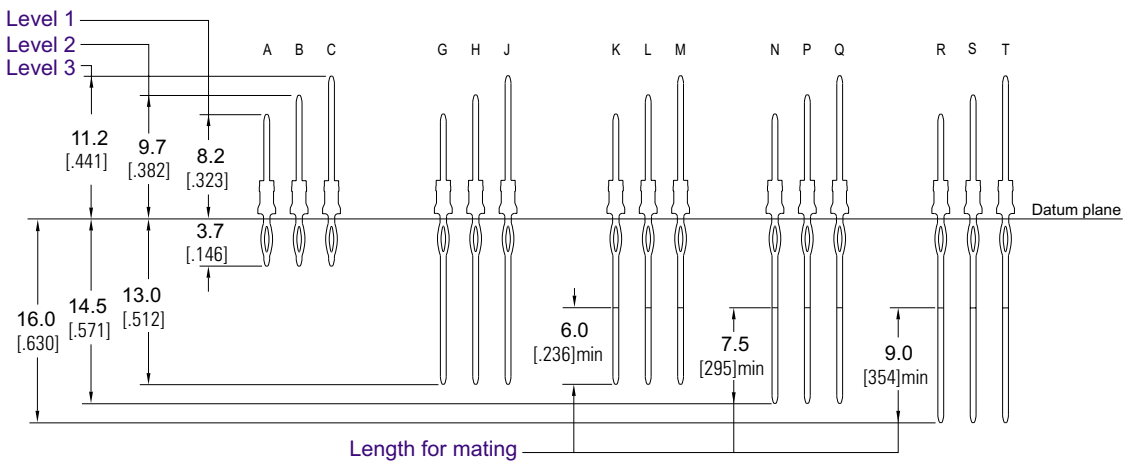

Є-Z met™ 2mm HM
Type AB-25 Header, Straight

Type AB, Vertical Male 125 Pin Connector

The Є-Z met™ type AB vertical male connector provides 125 signal contacts and an optional 44 ground shield contacts in a 5+2, 25 position configuration. The Type AB connector does not have a multifunction block for coding, thus providing an extra 15 signal contacts. The type AB connector is designed to be used by itself or together with type B, C, L, M or N Є-Z met™ connectors.

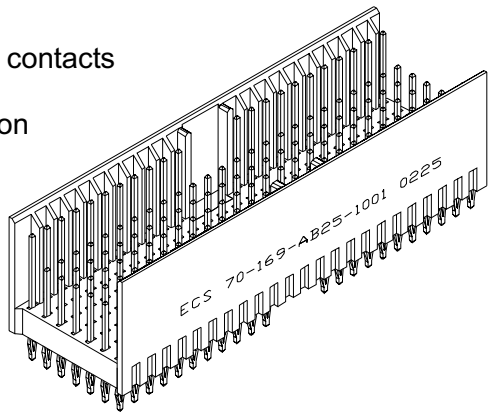

ECS offers 15 different standard tail lengths to choose from to provide various premate and midplane configurations. Contacts can be selectively loaded to accommodate customer specific applications. Custom tail lengths and mold configurations are also available. For non standard loading, or custom applications please refer to the fax request form on page D-35.

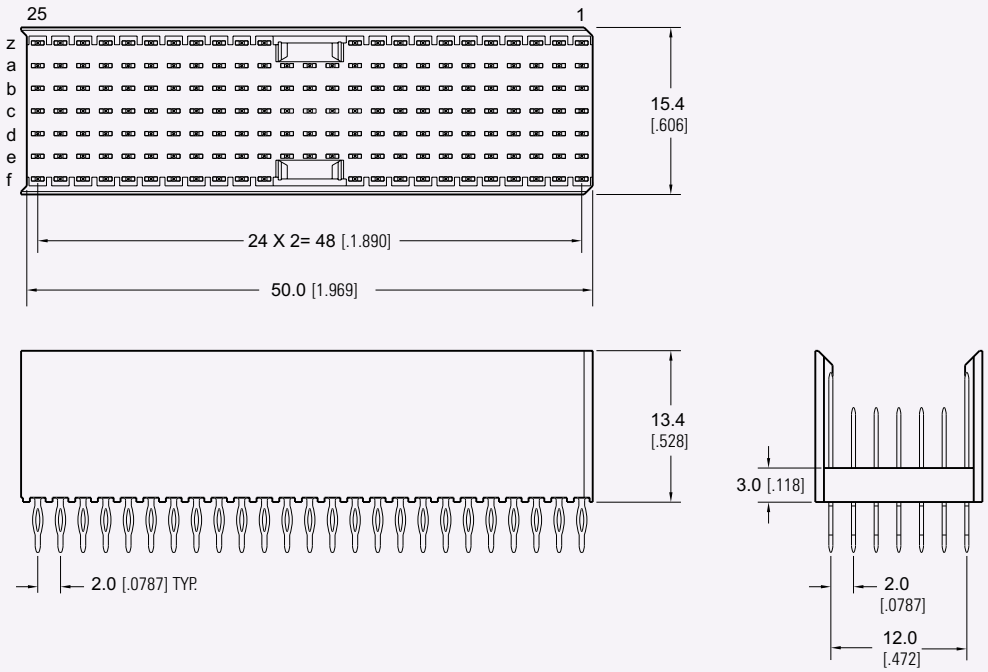

Dimensions are in mm [inch]

BOARD LAYOUT

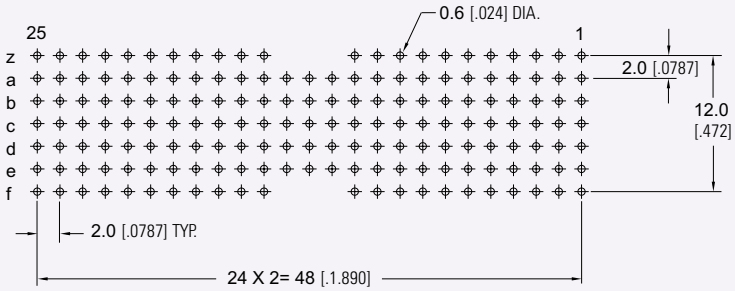

Identification	Number of Contacts	Contact Mating Side	Termination Side	Part Number	Contact Configuration
Type AB With Shield Without Peg	169	8.2 [.323]	13.0 [.512]	70-169-AB25-1001	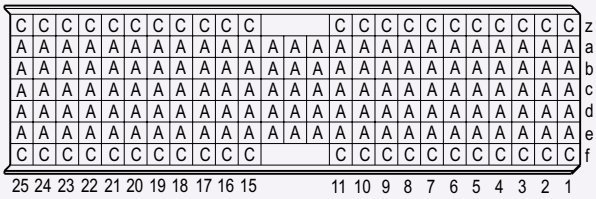
Type AB Without Shield Without Peg	125	9.7 [.382] 11.2 [.441]	14.5 [571] 16.0 [.630]	70-125-AB25-1001	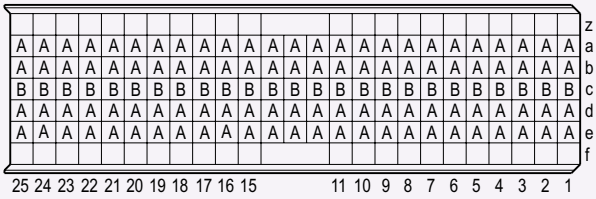
Type AB With Shield Without Peg	169	8.2 [.323] 9.7 [.382] 11.2 [.441]	3.7 [.146]	70-169-AB25-1101	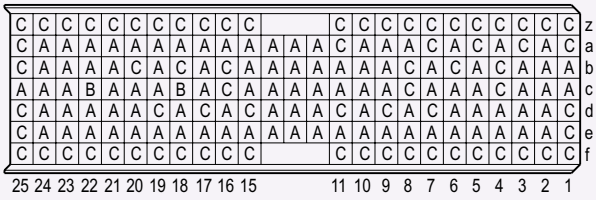

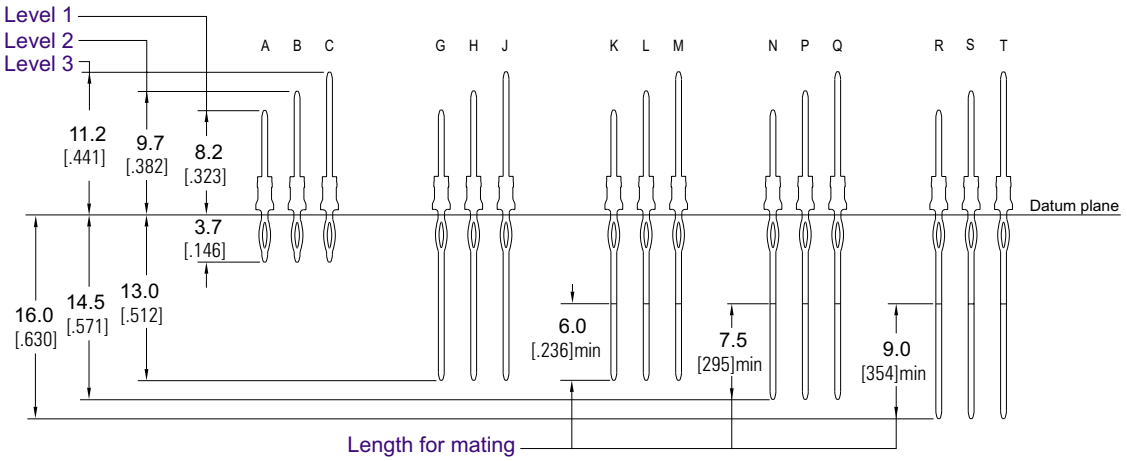

CONSULT FACTORY FOR CUSTOM CONNECTORS BUILT TO YOUR SPECIFICATION

E-Z met™ 2mm HM
Type A-47 Header, Straight

Type A-47, Vertical Male 220 Pin Connector

The E-Z met™ type A-47 vertical male connector provides 220 signal contacts and an additional 88 ground shield contacts in a 5+2, 47 position configuration, with 3 positions for a multifunction cavity. This connector is used in the P1 and P2 positions of the CompactPCI® backplane. The type A-47 is designed to be used alone, or it can be combined with type A, B, C, L, M, or N E-Z met™ connectors.

ECS offers 15 different standard tail lengths to choose from to provide various premate and midplane configurations. Contacts can be selectively loaded to accommodate customer specific applications. Custom tail lengths and mold configurations are also available. For non standard loading, or custom applications please refer to the fax request form on page D-35.

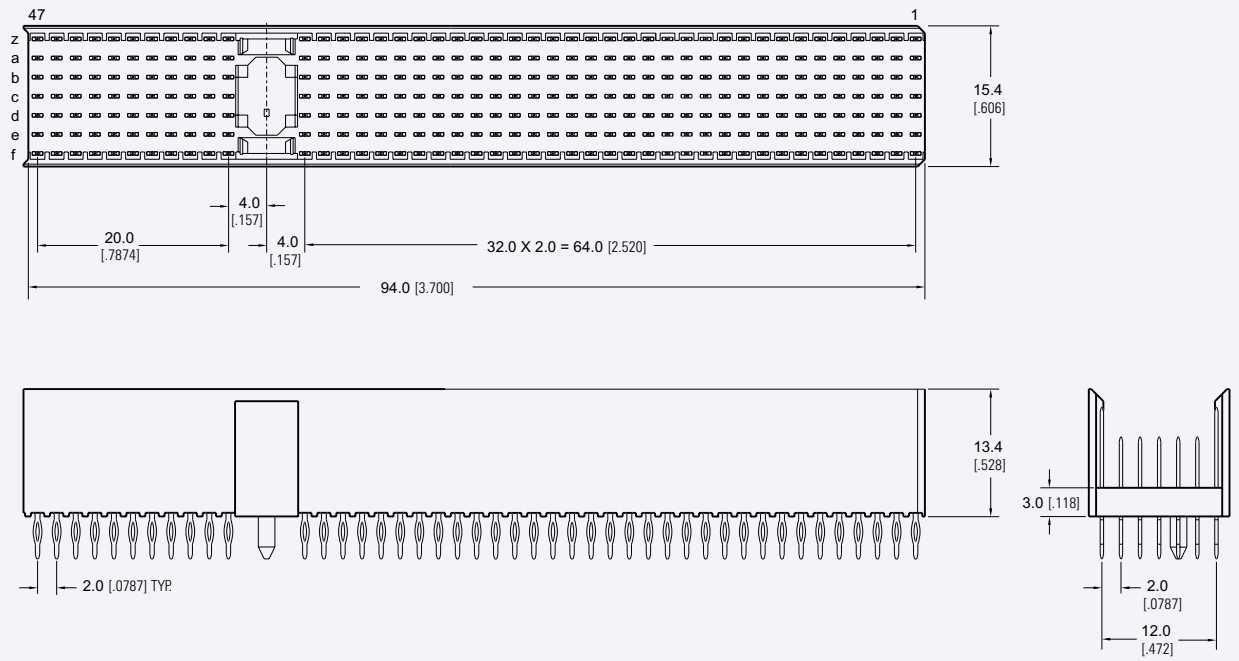

Dimensions are in mm [inch]

BOARD LAYOUT

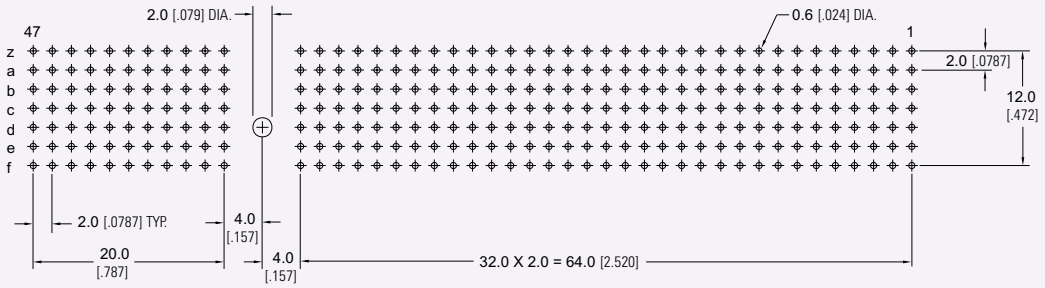

Identification	Number of Contacts	Contact Mating Side	Termination Side	Part Number	Contact Configuration
Type Monoblock 47	308	11.2 [.441] 9.7 [.382]	3.7 [.146]	70-308-A47-1101	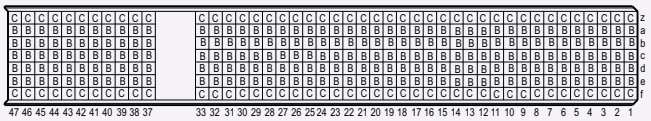
Type Monoblock 47 CompactPCI®	308	8.2 [.323] 9.7 [.382] 11.2 [.441]	3.7 [.146]	70-308-A47-1201	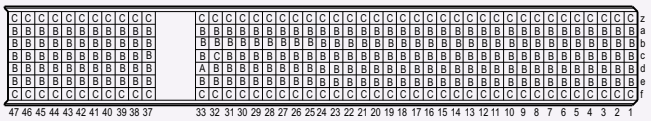
Type Monoblock 47 CompactPCI® hot swap	308	8.2 [.323] 9.7 [.382] 11.2 [.441]	3.7 [.146]	70-308-A47-1301	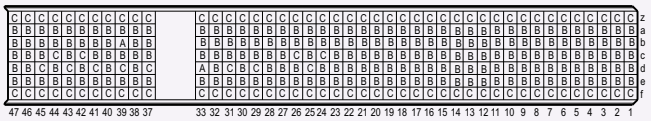
Type Monoblock 47 CompactPCI® computer telephony	232	8.2 [.323] 9.7 [.382] 11.2 [.441]	3.7 [.146]	70-232-A47-1001	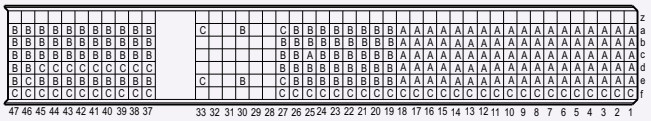
Type Monoblock 47 CompactPCI® I/O	308	8.2 [.323] 9.7 [.382] 11.2 [.441]	3.7 [.146] 16.0 [.629]	70-308-A47-1401 **70-308-A47-2401**	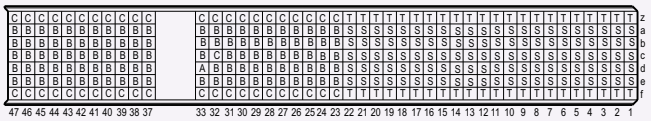

Bold part numbers are for Level 2 plating.

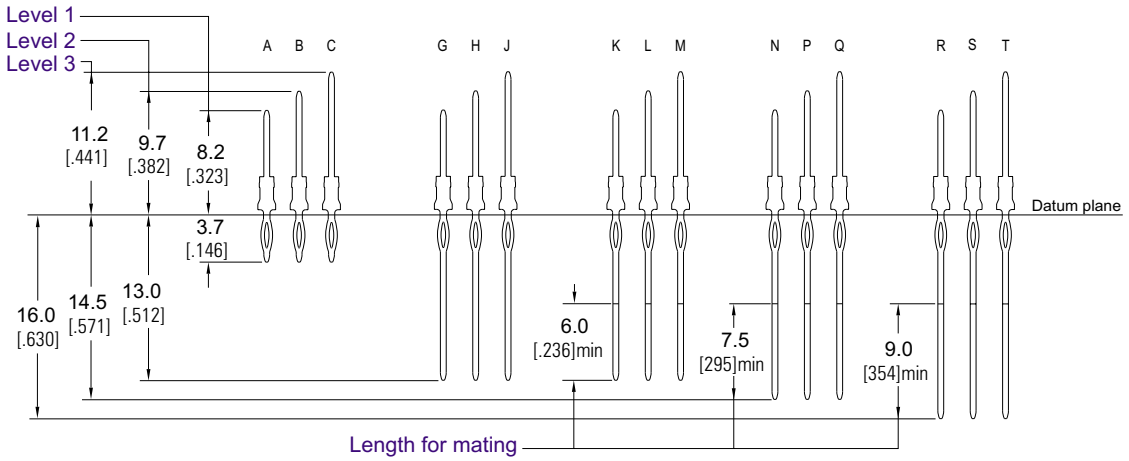

CONSULT FACTORY FOR CUSTOM CONNECTORS BUILT TO YOUR SPECIFICATION

E-Z met™ 2mm HM
Type C-11 Header, Straight

Type C-11, Vertical Male 55 Pin Connector

The E-Z met™ type C-11 vertical male connector provides 55 signal contacts and an additional 22 ground shield contacts in a 5+2, 11 position configuration. The C-11 connector is polarized and is designed for use at the bottom end of the column of connectors on the backplane.

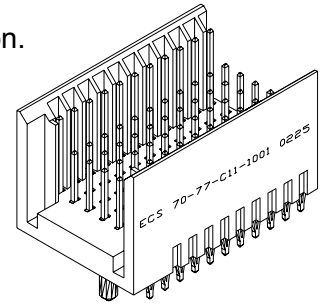

ECS offers 15 different standard tail lengths to choose from to provide various premate and midplane configurations. Contacts can be selectively loaded to accommodate customer specific applications. Custom tail lengths and mold configurations are also available.
For non standard loading, or custom applications please refer to the fax request form on page D-35.

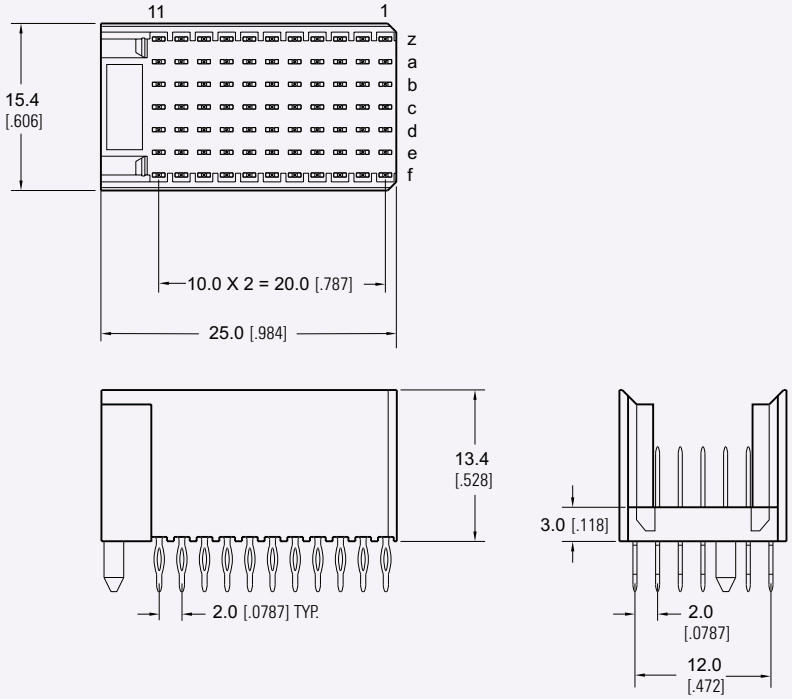

Dimensions are in mm [inch]

BOARD LAYOUT

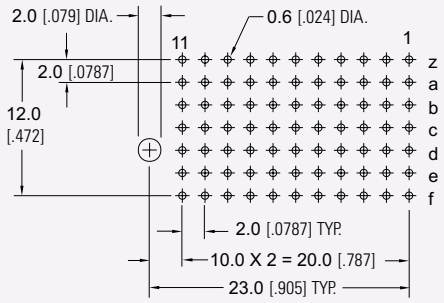

Identification	Number of Contacts	Contact Mating Side	Termination Side	Part Number	Contact Configuration
Type C	55	8.2 [.323]	3.7 [.146]	70-55-C11-1001	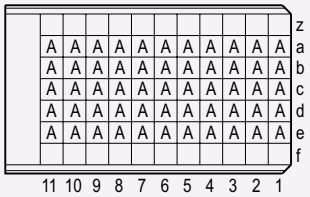
Type C	77	8.2 [.323] 11.2 [.441]	3.7 [.146]	70-77-C11-1001	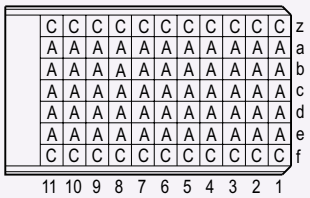
Type C	55	9.7 [.382]	3.7 [.146]	70-55-C11-1101	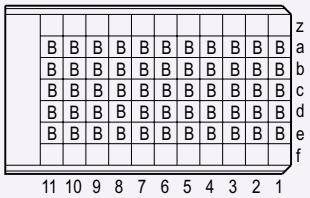
Type C	77	9.7 [.382] 11.2 [.441]	3.7 [.146]	70-77-C11-1101	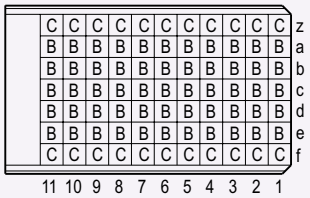
Type C	55	8.2 [.323]	13.0 [.512]	70-55-C11-1201 **70-55-C11-2201**	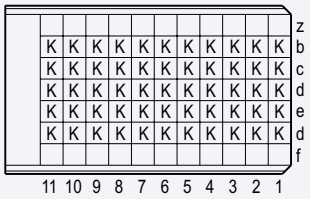
Type C	77	8.2 [.323] 11.2 [.441]	3.7 [.146] 13.0 [.512]	70-77-C11-1201 **70-77-C11-2201**	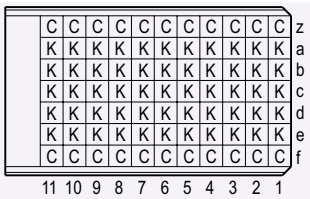

Bold part numbers are for Level 2 plating.

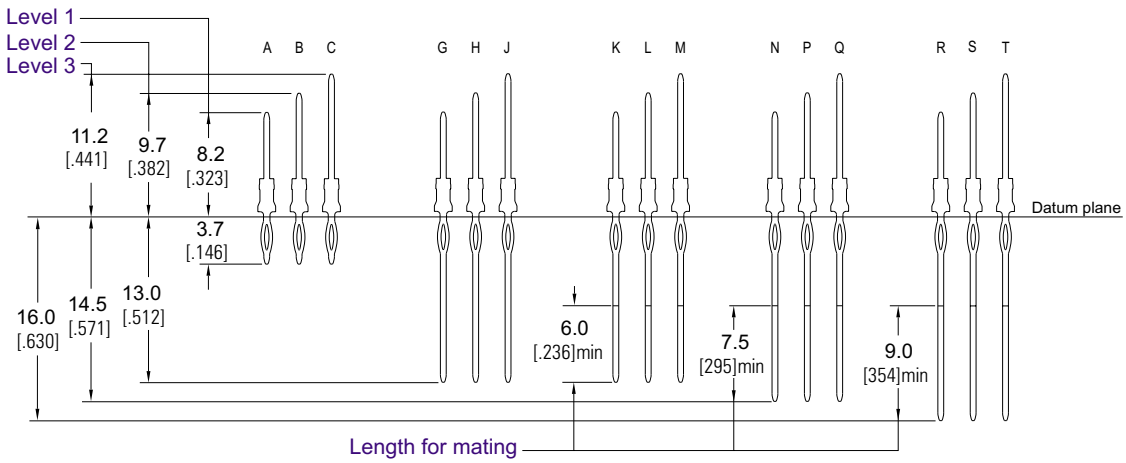

CONSULT FACTORY FOR CUSTOM CONNECTORS BUILT TO YOUR SPECIFICATION

E-Z met™ 2mm HM
Type D-25 Header, Straight

Identification	Number of Contacts	Contact Mating Side	Termination Side	Part Number	Contact Configuration
Type D	176	8.2 [.323]	3.7 [.146]	70-176-D25-1001	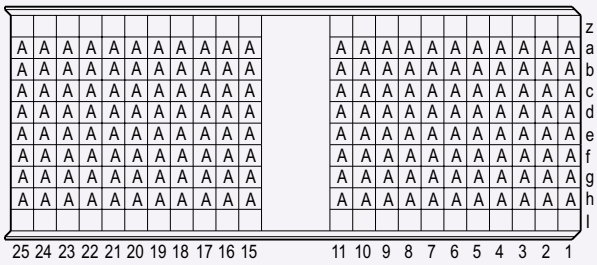
Type D	220	8.2 [.323] 11.2 [.441]	3.7 [.146]	70-220-D25-1001	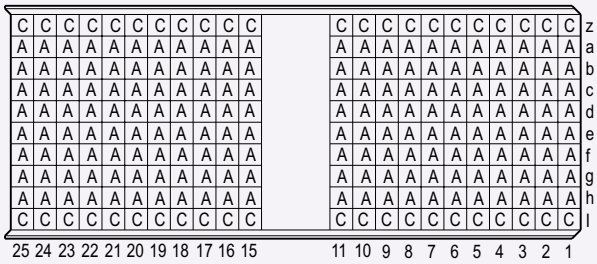
Type D	220	9.7 [.382] 11.2 [.441]	14.5 [.571] 16.0 [.630]	70-220-D25-1101 **70-220-D25-2101**	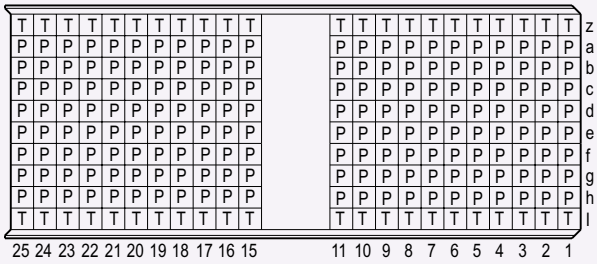

Bold part numbers are for Level 2 plating.

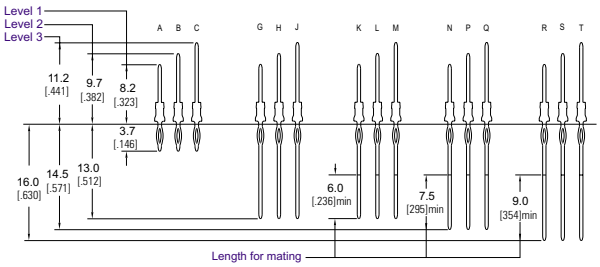

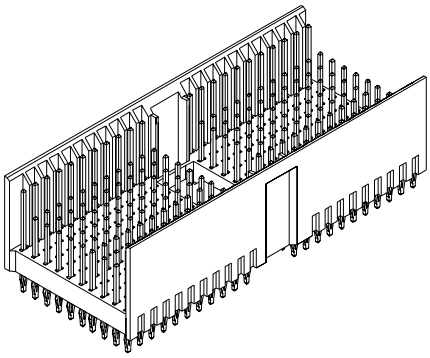

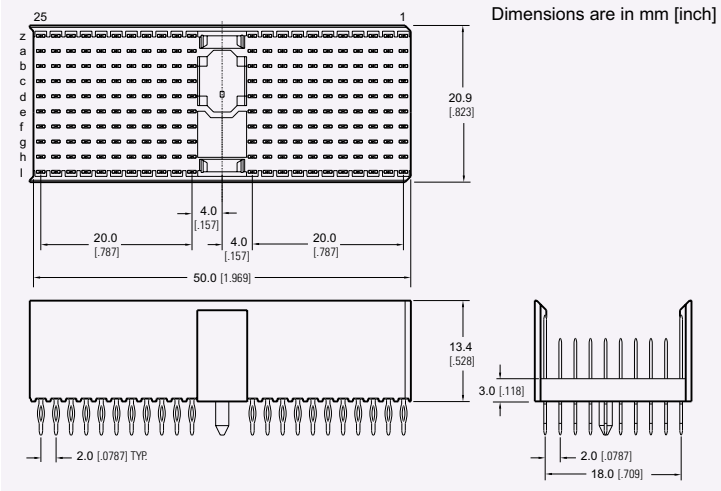

BOARD LAYOUT

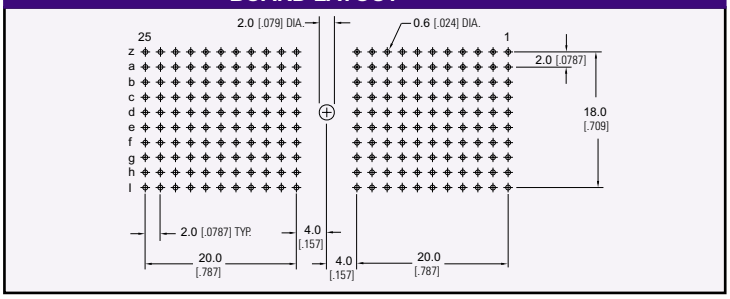

E-ZMet™ 2mm HM
Type E-25 Header, Straight

Identification	Number of Contacts	Contact Mating Side	Termination Side	Part Number	Contact Configuration
Type E	200	8.2 [.323]	3.7 [.146]	70-200-E25-1001	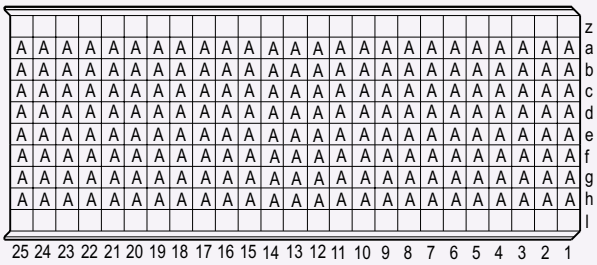
Type E	250	8.2 [.323] 11.2 [.441]	3.7 [.146]	70-250-E25-1001	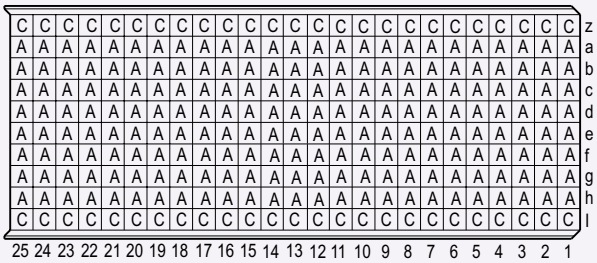
Type E	250	9.7 [.382] 11.2 [.441]	14.5 [.571] 16.0 [.630]	70-250-E25-1101 **70-250-E25-2101**	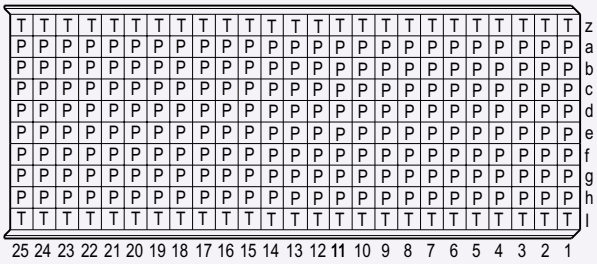

Bold part numbers are for Level 2 plating.

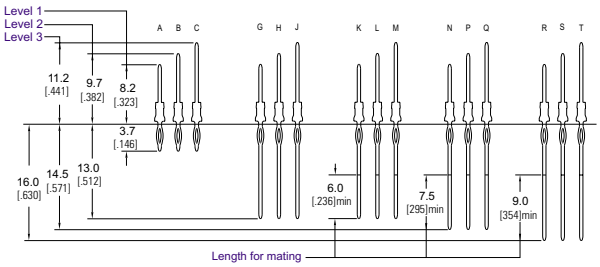

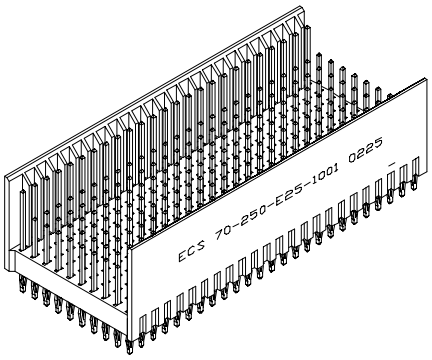

Dimensions are in mm [inch]

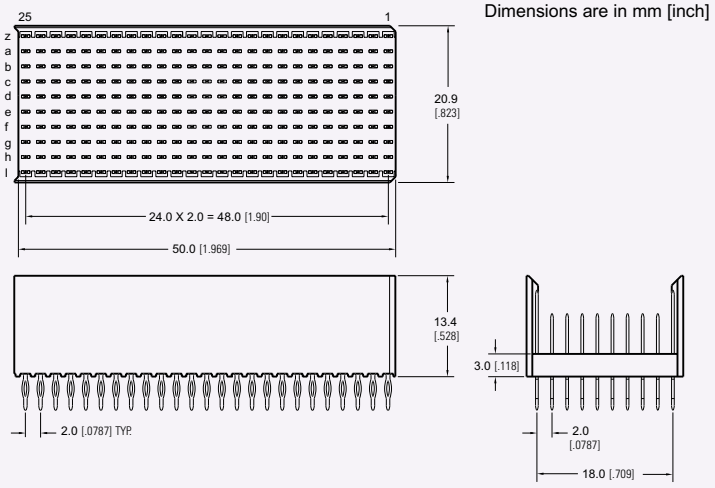

BOARD LAYOUT

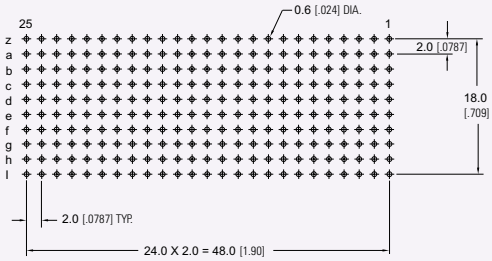

E-Z met™ 2mm HM
Type L and N Header, Straight

Type L, Vertical Male

The E-Z met™ Type L, vertical male connector provides the user with 6 multi-purpose cavities for use with high power or coax contacts. This connector also features an additional multi-function cavity for coding. For Coaxial, High Power, and High Current Contacts, see pages C-40 through C-47.

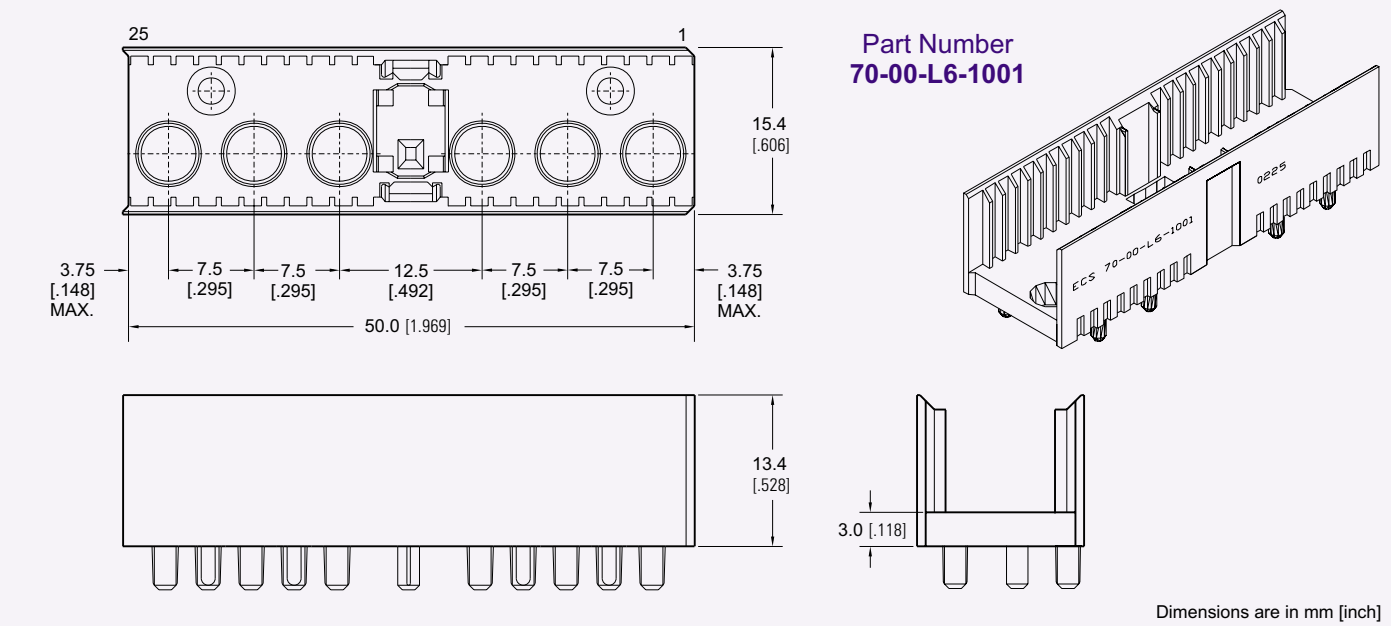

Type N, Vertical Male

The E-Z met™ Type N, vertical male connector provides the user with 3 multi-purpose cavities for use with high power or coax contacts.
For Coaxial, High Power, and High Current Contacts, see pages C-40 through C-47.

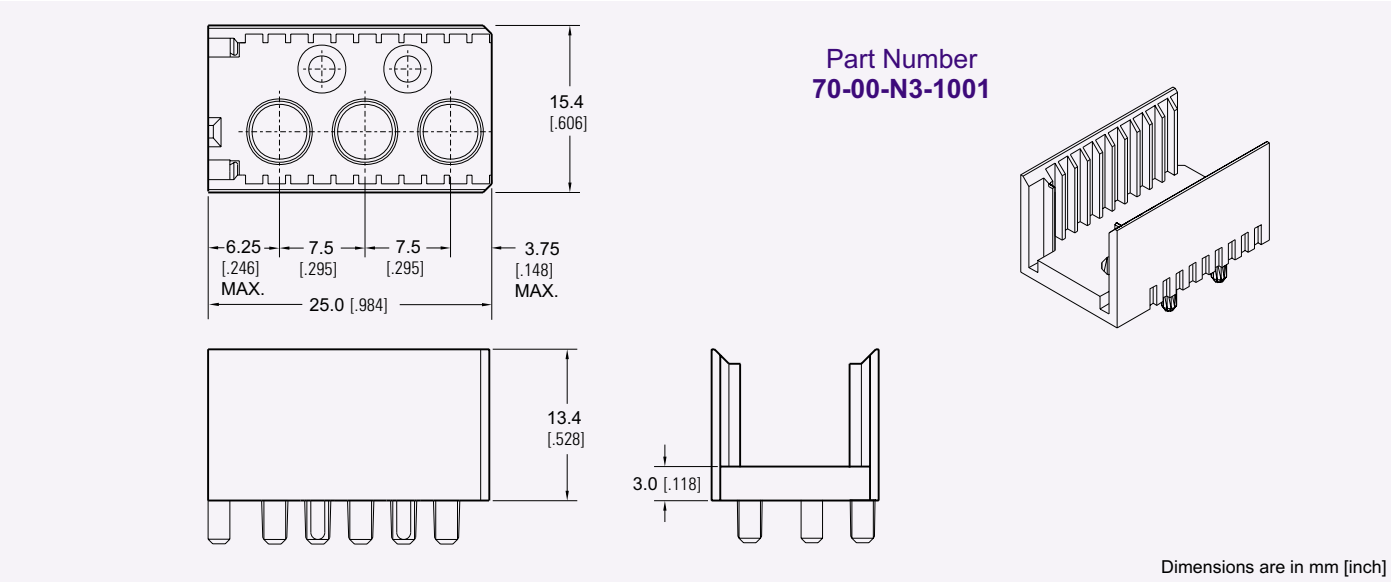

Type M, Vertical Male 77 Pin Connector

The E-Z met™ Type M, vertical male connector provides 55 signal contacts and an optional 22 ground shield contacts. This connector also features 3 multi-purpose locations for use with high power or coax contacts, as well as a multi-function cavity for coding. For Coaxial, High Power, and High Current Contacts, see pages C-40 through C-47.

Identification	Number of Contacts	Contact Mating Side	Termination Side	Part Number	Contact Configuration
Type M	55	9.7 [.382]	3.7 [.146]	70-55-M25-1001	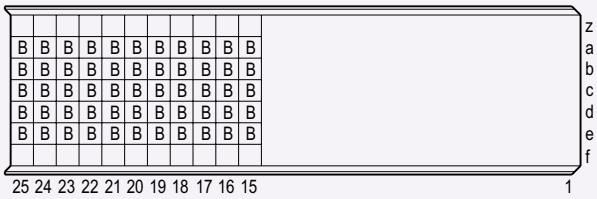

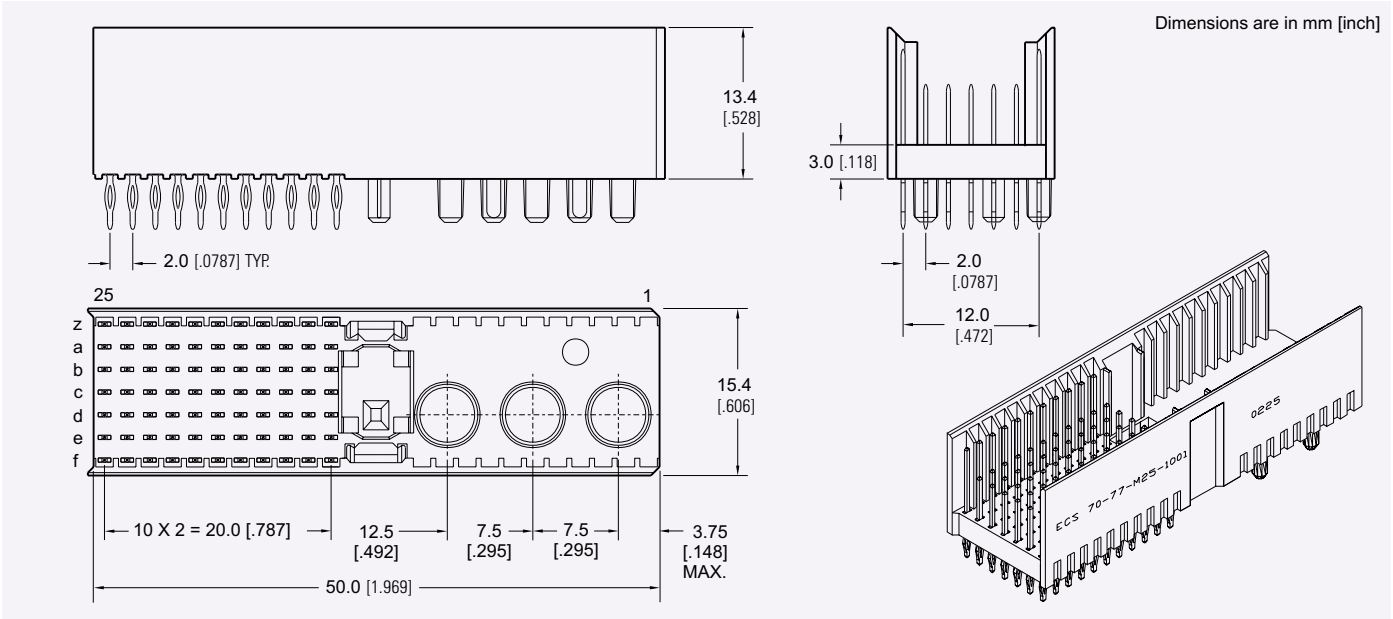

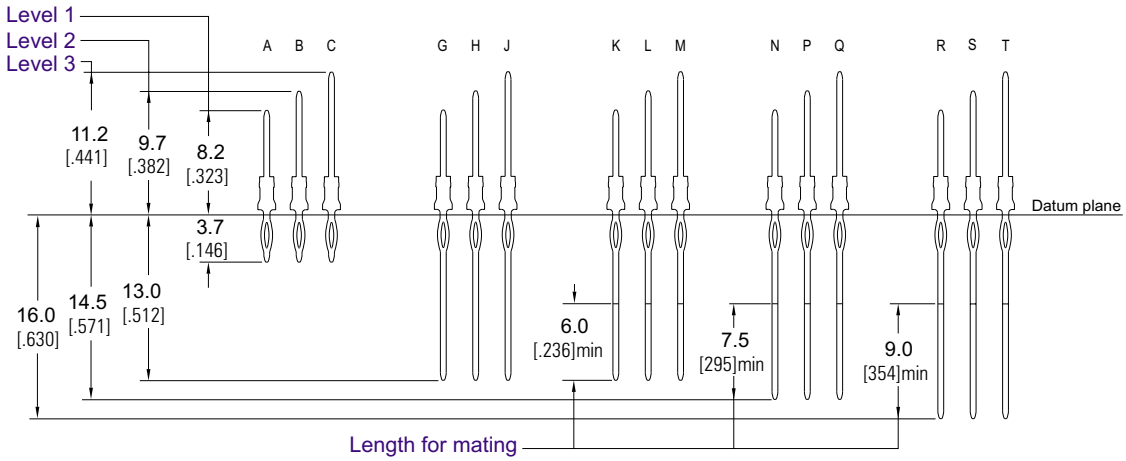

E-Z met™ 2mm HM
Type A, B, AB and C Shrouds

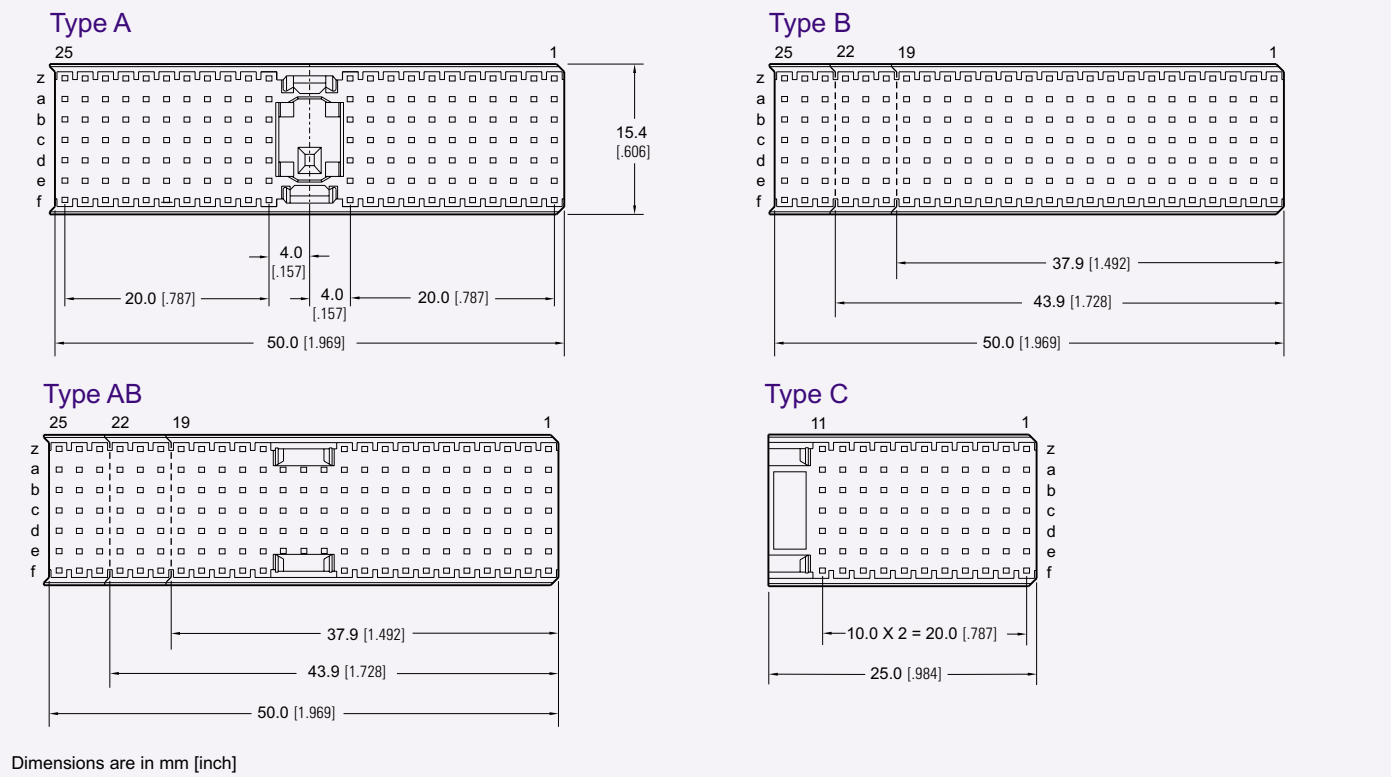

Dimensions are in mm [inch]

Shroud Base Thicknesses

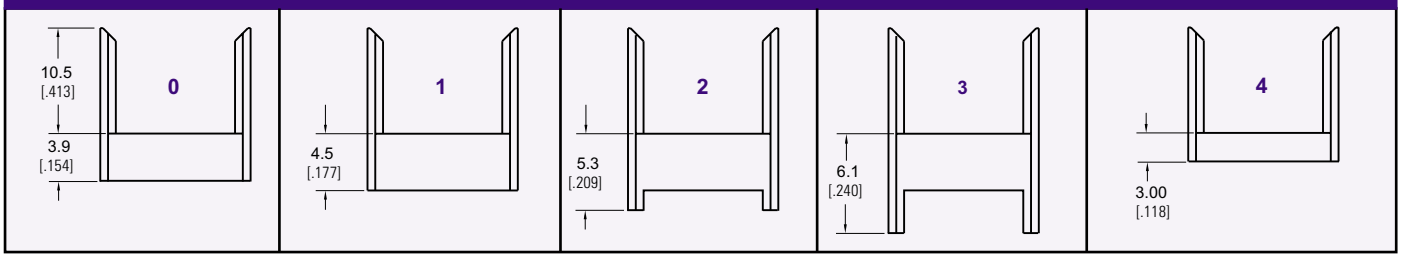

PART NUMBERING

70 — S XXX — X

Series Code
EZMet™ 2mm HM (hard metric)

Type
A25 C11
B25 AB25
B22 AB22
B19 AB19

Shroud Base Thickness
0 = 3.9 [.154]
1 = 4.5 [.177]
2 = 5.3 [.209]
3 = 6.1 [.240]
4 = 3.0 [.118]

CONSULT FACTORY FOR ASSISTANCE TO ASSURE PROPER MATING

ELECTRONIC CONNECTOR SERVICE INC. 11880 WESTERN AVE. STANTON, CA 90680 TOLL FREE (877) ECS-CONN TEL (714) 895-6351 FAX (714) 894-1858
WWW.ECSCONN.COM

E-Z met™ 2mm HM
Coding Keys

ECS offers 10 different colored coding keys, which can be inserted into the multifunction area of the connector to prevent damaging the system due to incorrect insertion of cards with different logic. The coding keys are inserted into the connector after the connector has been installed into the board through the use of a special insertion tool. For 5.0 V logic, CompactPCI® uses brilliant blue, and for 3.3 V logic, cadmium yellow is used.

Male Coding Keys

Coding Key	Code Number	Color	Part Number
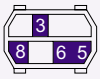	3568	Pastel Orange RAL 2003	73568
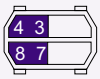	3478	Steel Blue RAL 5011	73487
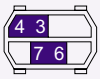	3467	Slate Grey RAL 7015	73467
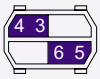	3456	Cadmium Yellow RAL 1021 **3.3v CompactPCI®**	73456
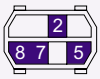	2578	Reseda Green RAL 6011	72578
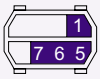	1567	Brilliant Blue RAL 5007 **5.0v CompactPCI®**	71567
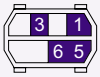	1356	Blue/Lilac RAL 4005	71356
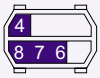	4678	Ocher Yellow RAL 1024	74678
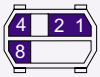	1248	Strawberry Red RAL 3018	71248
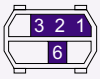	1236	Nut Brown RAL 2003	71236

Female Coding Keys

Coding Key	Code Number	Color	Part Number
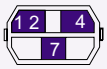	1247	Pastel Orange RAL 2003	711247
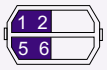	1256	Steel Blue RAL 5011	711256
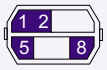	1258	Slate Grey RAL 7015	711258
	1278	Cadmium Yellow RAL 1021 **3.3v CompactPCI®**	711278
	1346	Reseda Green RAL 6011	711346
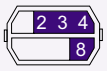	2348	Brilliant Blue RAL 5007 **5.0v CompactPCI®**	712348
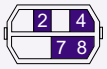	2478	Blue/Lilac RAL 4005	712478
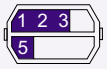	1235	Ocher Yellow RAL 1024	711235
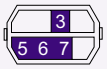	3567	Strawberry Red RAL 3018	713567
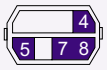	4578	Nut Brown RAL 2003	714578

RAL is a Trademark of the Central Organization for product assurance in Germany.

Note: The color/code number combinations listed above follow IEC 1076-4-101 recommendations.

EZMet™ 2mm HM
Type A-25 Receptacle, Right Angle

The E-Z met™ Type A-25 female connector provides 110 contacts, and a multifunction cavity with pre-alignment guides to prevent improper loading. This connector is used in the J1 and J4 positions of the Compact PCI® daughtercard.

ECS offers the Type A-25 connector either with or without mounting pegs. The connectors are also available with integrated upper ground return shields and lower ground return shields may be ordered separately. This connector is designed to be used by itself or with any Type B, C, L, M or N E-Z met™ connector.

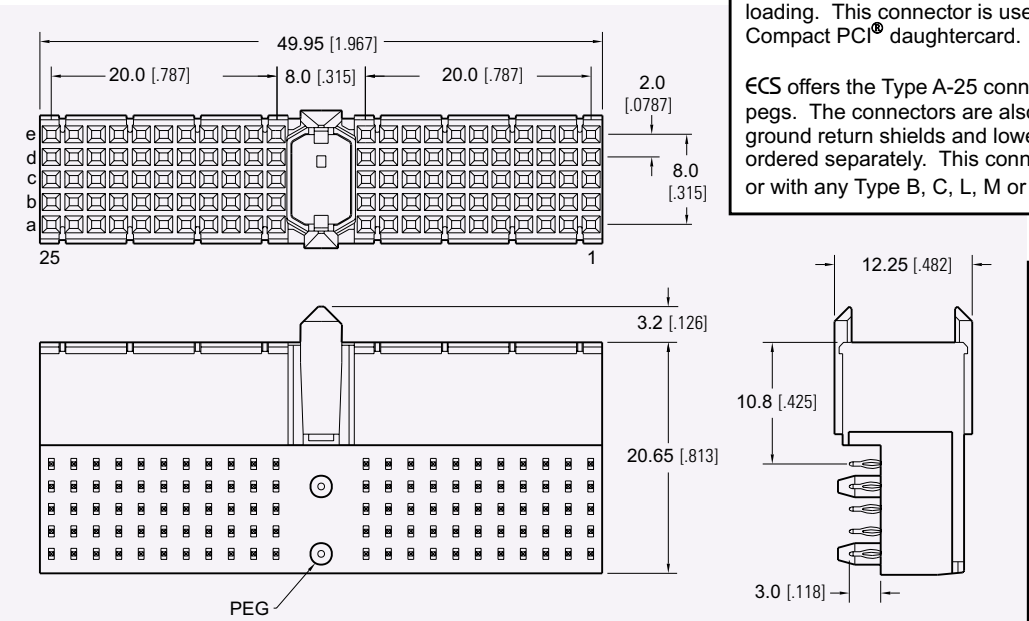

Dimensions are in mm [inch]

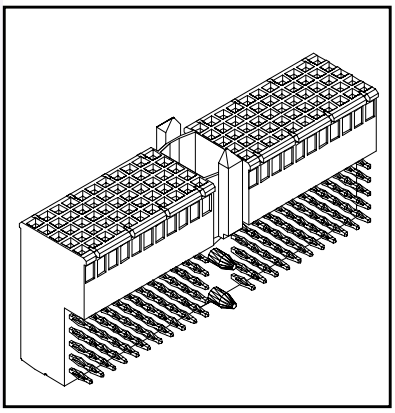

BOARD LAYOUT

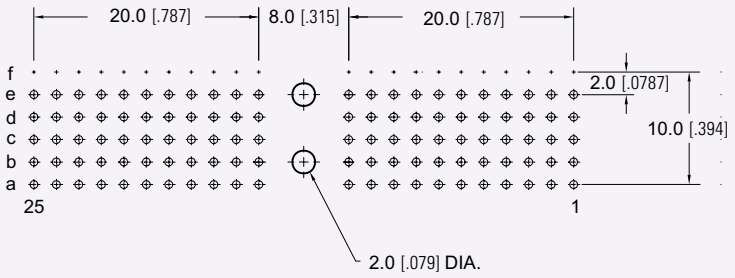

Lower Shield P/N 71-A25-01

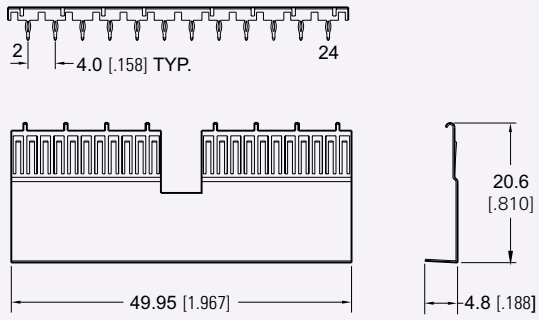

PART NUMBERING

71 — A25 X — X 0 — X

SERIES CODE
2mm Hard Metric Female

TYPE
A25

MOUNTING PEG
1= Without Peg
Blank = With Peg

UPPER SHIELD
0 = Without Upper Shield
1 = With Upper Shield

CONTACT LOADING
1 = A, B, C, D, E
2 = A, B, C, D
3 = A, B, C
4 = A, D, E
5 = B, D

Upper Shield P/N 71-A25-10

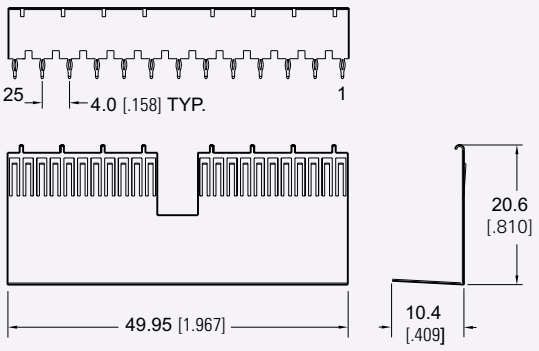

ϵ-Z met™ 2mm HM
Type B-25 Receptacle, Right Angle

The ϵ-Z met™ Type B-25 female connector provides 125 contacts. These connectors are available either with or without integrated upper ground return shields. Lower ground return shields may be ordered separately.

The Type B-25 connector is not designed to be used alone, but may be used together with either a Type A, C, L, M or N ϵ-Z met™ connector.

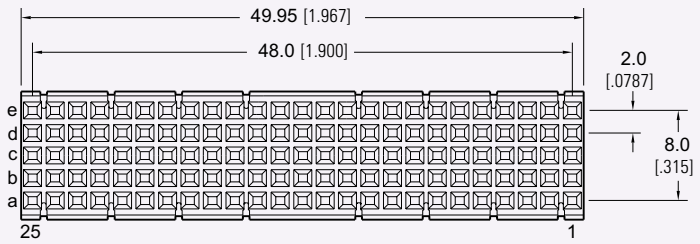

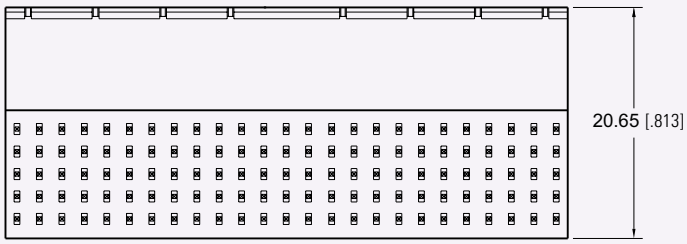

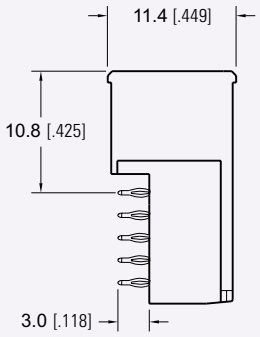

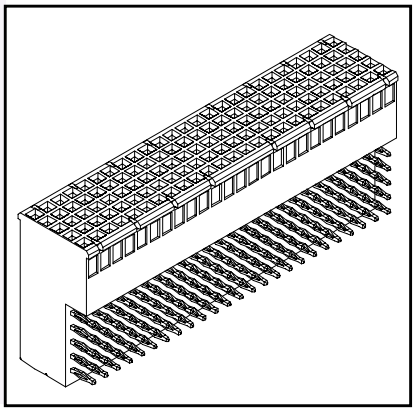

Dimensions are in mm [inch]

BOARD LAYOUT

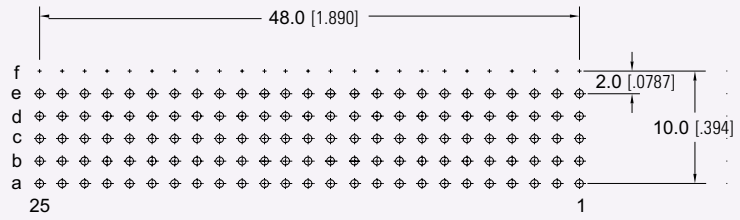

Lower Shield P/N 71-B25-01

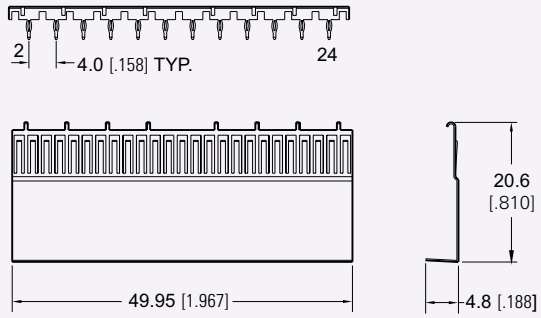

PART NUMBERING

71 — B25 — X0 — X

SERIES CODE
2mm Hard Metric Female

TYPE
B25

UPPER SHIELD
0 = Without Upper Shield
1 = With Upper Shield

CONTACT LOADING
1 = A, B, C, D, E
2 = A, B, C, D
3 = A, B, C
4 = A, D, E
5 = B, D

Upper Shield P/N 71-B25-10

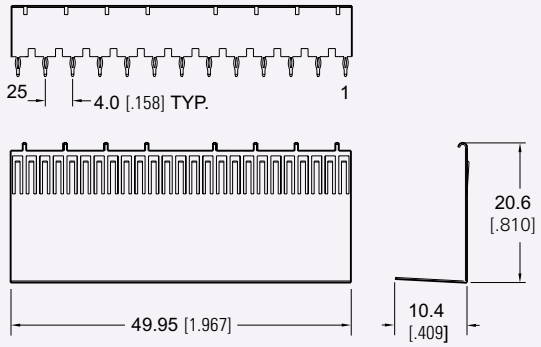

Є-Z met™ 2mm HM
Type B-22 Receptacle, Right Angle

The Є-Z met™ Type B-22 connector provides 110 contacts. These connectors are available either with or without integrated upper ground return shields. Lower ground return shields may be ordered separately.

The Type B-22 connector is used in the J2 and J5 positions on the Compact PCI® daughtercard. This connector is not designed to be used alone, but may be used together with either a Type A, C, L, M or N Є-Z met™ connector.

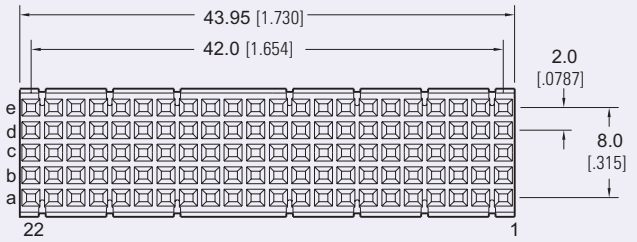

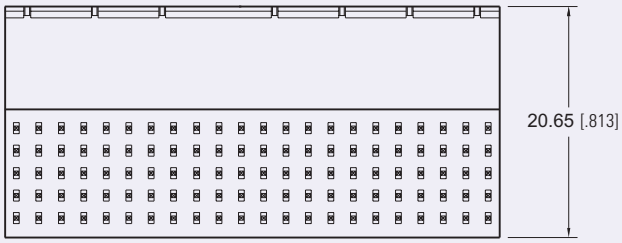

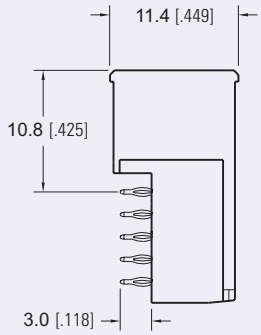

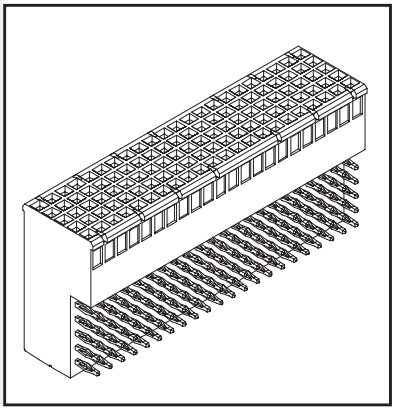

Dimensions are in mm [inch]

BOARD LAYOUT

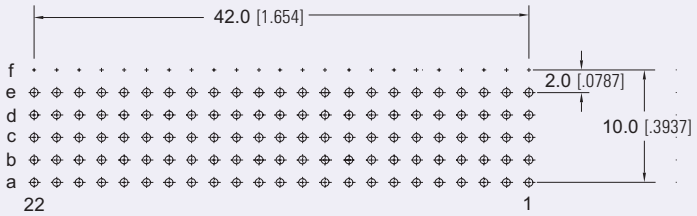

Lower Shield P/N 71-B22-01

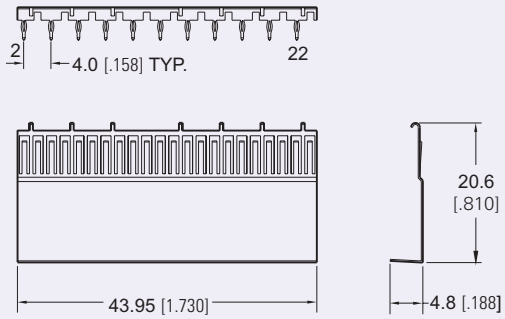

PART NUMBERING

71 — B22 — X 0 — X

SERIES CODE
2mm Hard Metric Female

TYPE
B22

UPPER SHIELD
0 = Without Upper Shield
1 = With Upper Shield

CONTACT LOADING
1 = A, B, C, D, E
2 = A, B, C, D
3 = A, B, C
4 = A, D, E
5 = B, D

Upper Shield P/N 71-B22-10

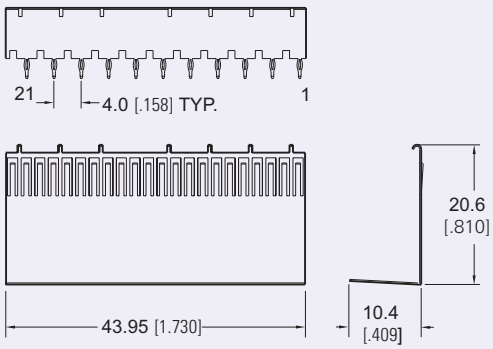

Є-Z met™ 2mm HM
Type B-19 Receptacle, Right Angle

The Є-Z met™ Type B-19 connector provides 95 contacts. These connectors are available either with or without integrated upper ground return shields. Lower ground return shields may be ordered separately.

The Type B-19 connector is used in the J3 position on the Compact PCI® daughtercard. This connector is not designed to be used alone, but may be used together with either a Type A, C, L, M or N Є-Z met™ connector.

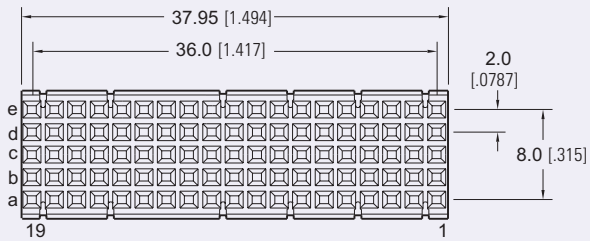

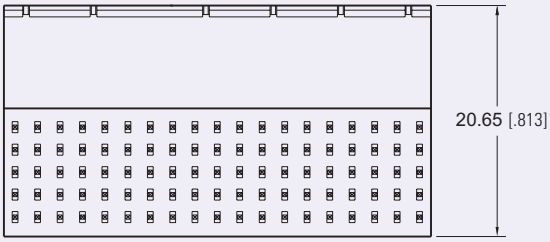

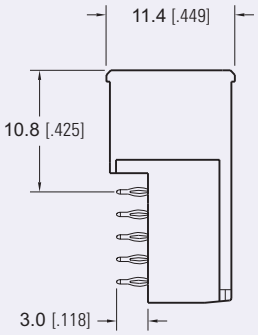

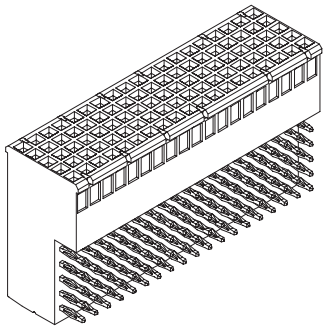

Dimensions are in mm [inch]

BOARD LAYOUT

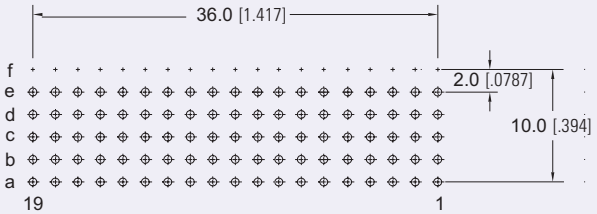

Lower Shield P/N 71-B19-01

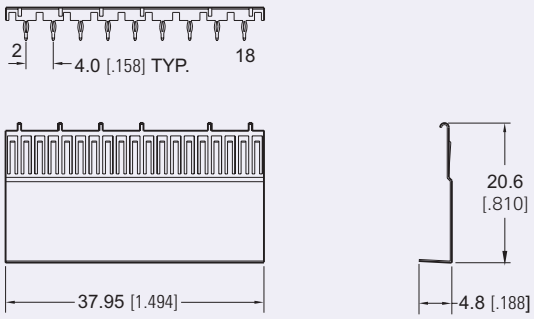

PART NUMBERING

71 — B19 — X 0 — X

SERIES CODE
2mm Hard Metric Female

TYPE
B19

UPPER SHIELD
0 = Without Upper Shield
1 = With Upper Shield

CONTACT LOADING
1 = A, B, C, D, E
2 = A, B, C, D
3 = A, B, C
4 = A, D, E
5 = B, D

Upper Shield P/N 71-B19-10

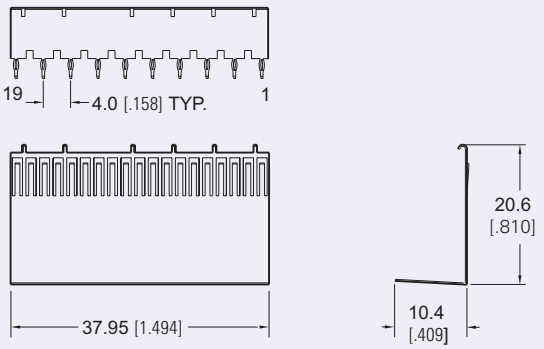

Є-Z met™ 2mm HM
Type B-19 Receptacle, Right Angle

The Є-Z met™ Type B-19 connector provides 95 contacts. These connectors are available either with or without integrated upper ground return shields. Lower ground return shields may be ordered separately.

The Type B-19 connector is used in the J3 position on the Compact PCI® daughtercard. This connector is not designed to be used alone, but may be used together with either a Type A, C, L, M or N Є-Z met™ connector.

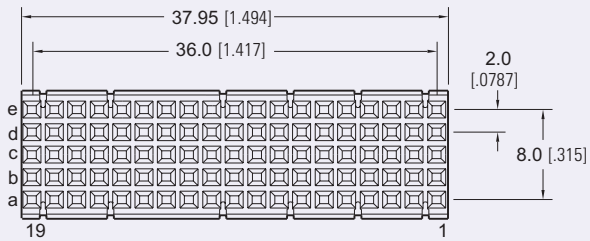

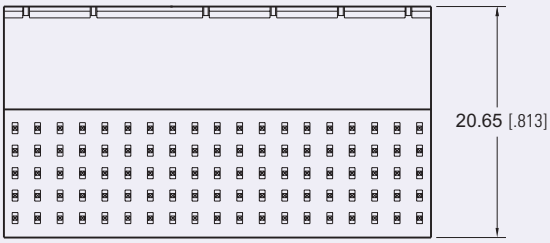

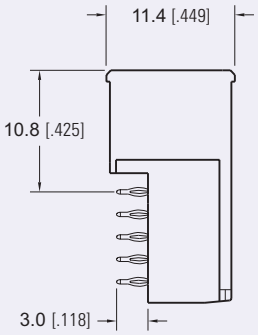

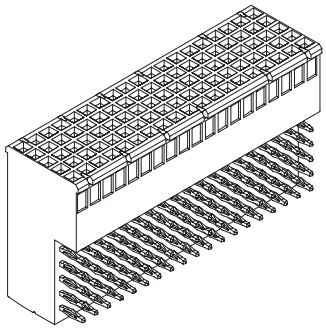

Dimensions are in mm [inch]

BOARD LAYOUT

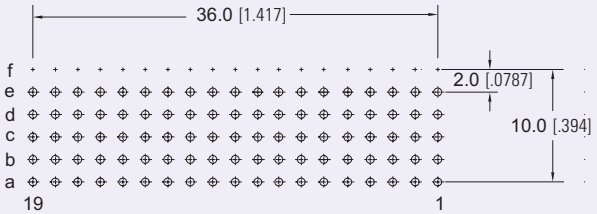

Lower Shield P/N 71-B19-01

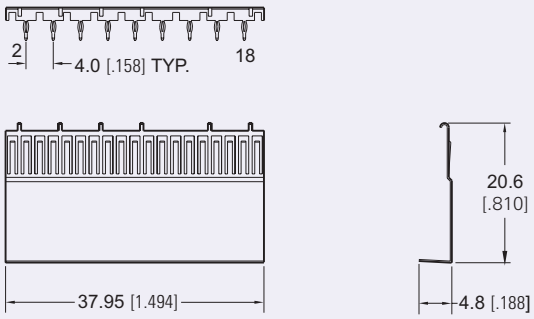

PART NUMBERING

71 — B19 — X0 — X

SERIES CODE
2mm Hard Metric Female

TYPE
B19

UPPER SHIELD
0 = Without Upper Shield
1 = With Upper Shield

CONTACT LOADING
1 = A, B, C, D, E
2 = A, B, C, D
3 = A, B, C
4 = A, D, E
5 = B, D

Upper Shield P/N 71-B19-10

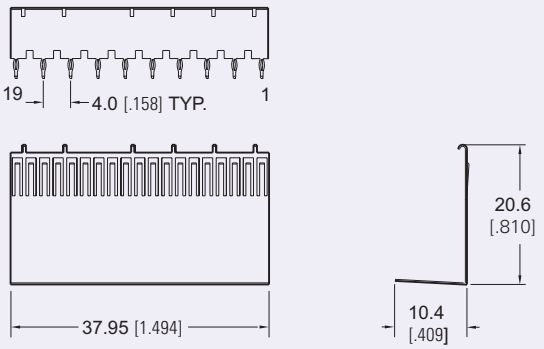

ϵ-Z met™ 2mm HM
Type AB-25 Receptacle, Right Angle

The ϵ-Z met™ Type AB-25 connector provides 125 contacts as well as integrated pre-alignment guides. These connectors are available either with or without integrated upper ground return shields. Lower ground return shields may be ordered separately.

The Type AB-25 connector can be used by itself or in combination with any Type A, B, C, L, M and N ϵ-Z met™ connector.

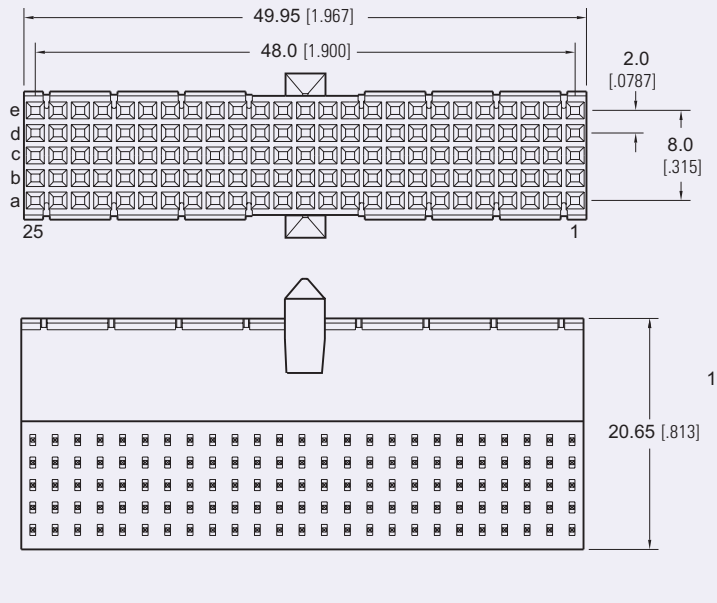

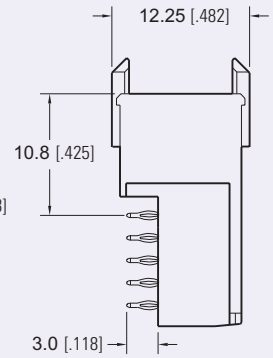

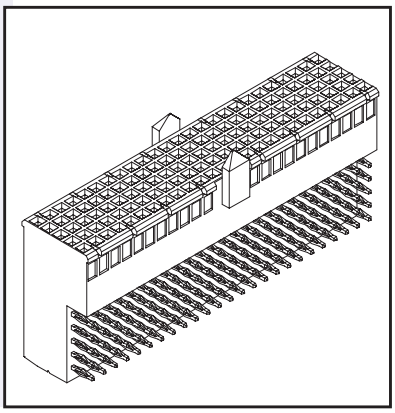

Dimensions are in mm [inch]

BOARD LAYOUT

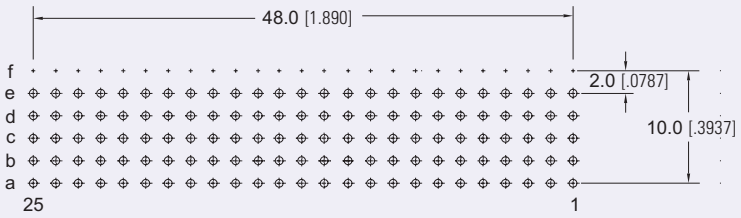

Lower Shield P/N 71-AB25-01

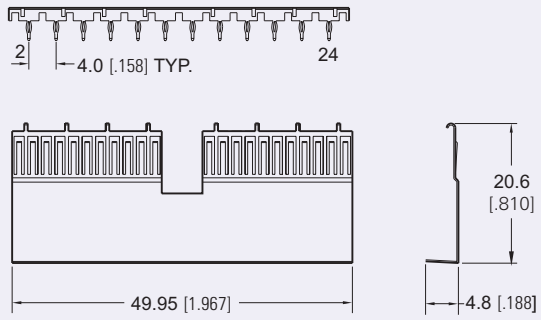

PART NUMBERING

71 — AB25 — X 0 — X

SERIES CODE
2mm Hard Metric Female

TYPE
AB25

UPPER SHIELD
0 = Without Upper Shield
1 = With Upper Shield

CONTACT LOADING
1 = A, B, C, D, E
2 = A, B, C, D
3 = A, B, C
4 = A, D, E
5 = B, D

Upper Shield P/N 71-AB25-10

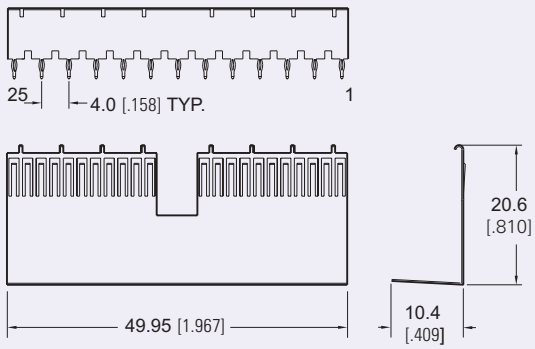

ϵ-Z met™ 2mm HM
Type AB-22 Receptacle, Right Angle

The ϵ-Z met™ Type AB-22 connector provides 110 contacts as well as integrated pre-aligment guides. These connectors are available either with or without integrated upper ground return shields. Lower ground return shields may be ordered separately.

The Type AB-22 connector is used in the rJ2 and rJ3 positions on Compact PCI® Daughtercard. This connector can be used by itself or in combination with any Type A, B, C, L, M and N ϵ-Z met™ connector.

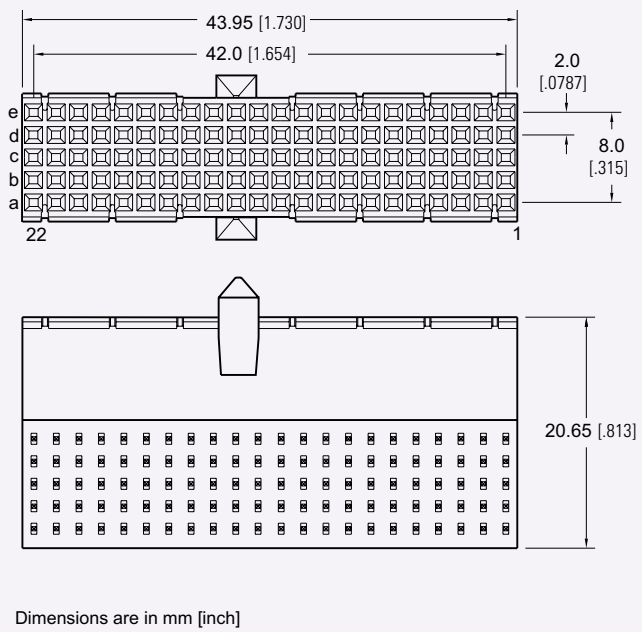

Dimensions are in mm [inch]

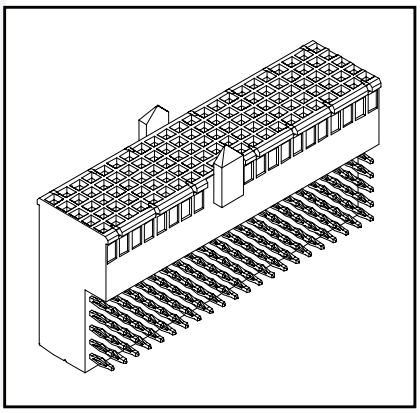

BOARD LAYOUT

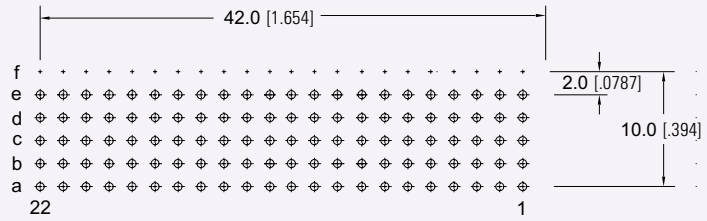

Lower Shield P/N 71-AB22-01

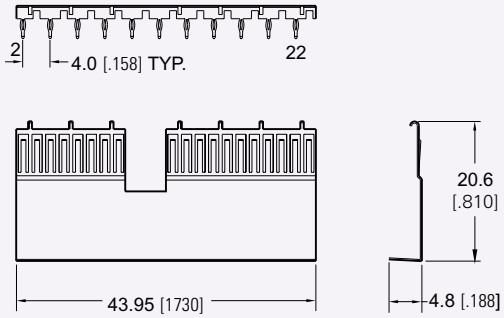

PART NUMBERING

71 — AB22 — X 0 — X

SERIES CODE
2mm Hard Metric Female

TYPE
AB22

UPPER SHIELD
0 = Without Upper Shield
1 = With Upper Shield

CONTACT LOADING
1 = A, B, C, D, E
2 = A, B, C, D
3 = A, B, C
4 = A, D, E
5 = B, D

Upper Shield P/N 71-AB22-10

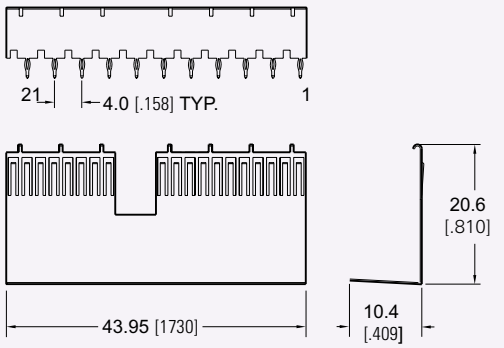

E-Z met™ 2mm HM
Type AB-19 Receptacle, Right Angle

The E-Z met™ Type AB-19 connector provides 95 contacts as well as pre-alignment guides. These connectors are available either with or without integrated upper ground return shields. Lower ground return shields may be ordered separately.

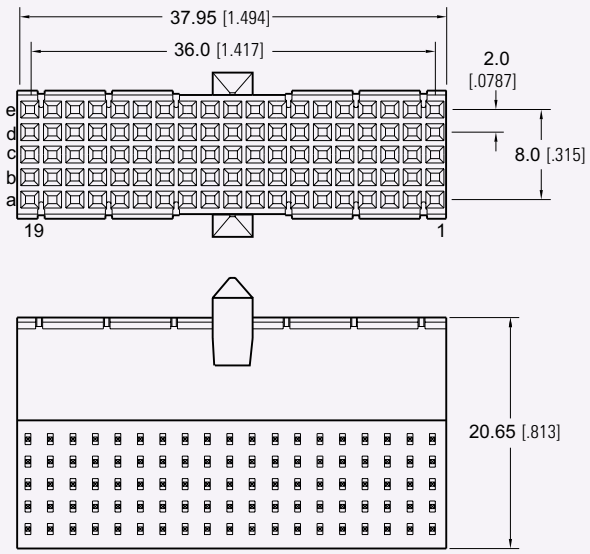

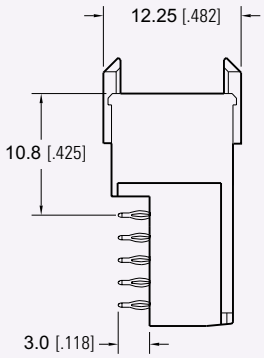

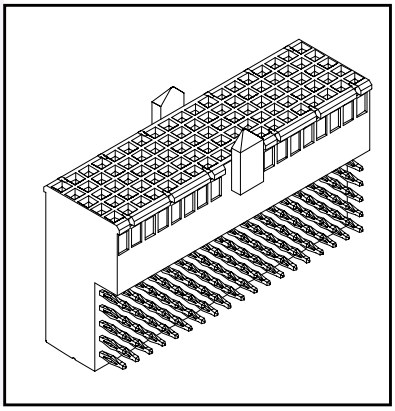

Dimensions are in mm [inch]

BOARD LAYOUT

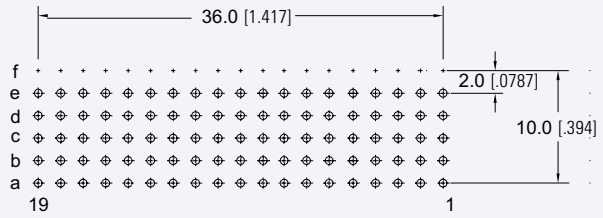

Lower Shield P/N 71-AB19-01

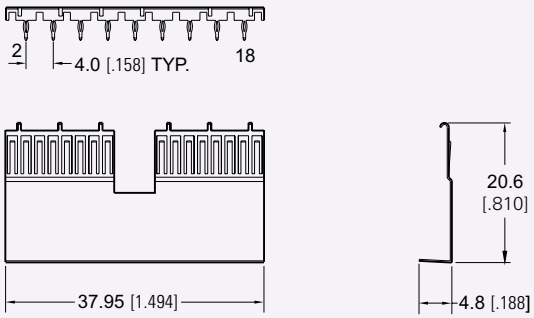

PART NUMBERING

71 — AB19 — X 0 — X

SERIES CODE
2mm Hard Metric Female

TYPE
AB19

UPPER SHIELD
0 = Without Upper Shield
1 = With Upper Shield

CONTACT LOADING
1 = A, B, C, D, E
2 = A, B, C, D
3 = A, B, C
4 = A, D, E
5 = B, D

Upper Shield P/N 71-AB19-10

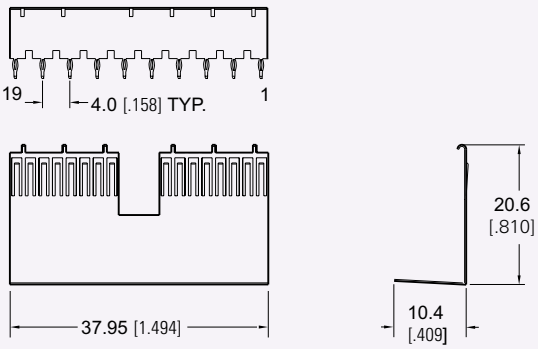

Є-Z met™ 2mm HM
Type C-11 Receptacle, Right Angle

The Є-Z met™ Type C-11 connector provides 55 contacts as well as pre-alignment guides. These connectors are available either with or without integrated upperground return shields. Lower ground return shields may be ordered separately. Connectors are also available either with or without mounting pegs.

The Type C-11 connector can be used at the bottom of a stack in conjunctionwith any Type A, B, L, M or N Є-Z met™ connector.

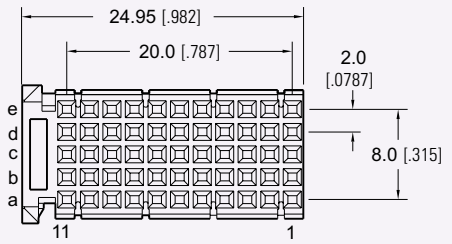

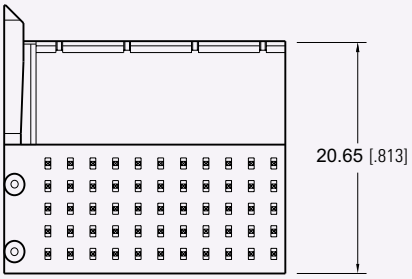

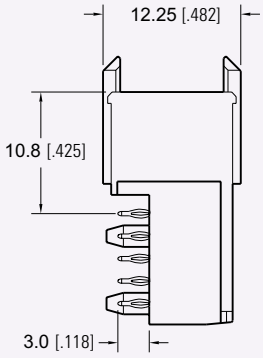

WITH MOUNTING PEG

Dimensions are in mm [inch]

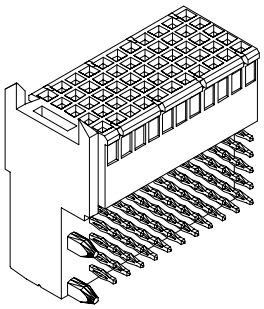

BOARD LAYOUT

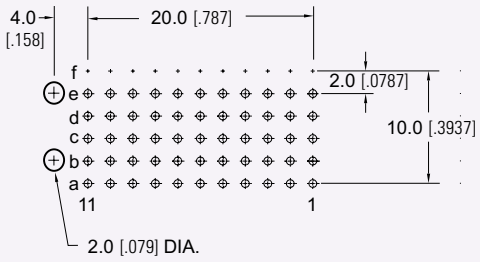

Lower Shield P/N 71-C11-01

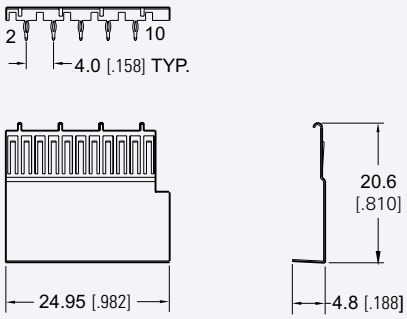

PART NUMBERING

71 — C11 X — X 0 — X

SERIES CODE
2mm Hard Metric Female

TYPE
C11

MOUNTING PEG
1 = Without Peg
Blank = With Peg

UPPER SHIELD
0 = Without Upper Shield
1 = With Upper Shield

CONTACT LOADING
1 = A, B, C, D, E
2 = A, B, C, D
3 = A, B, C
4 = A, D, E
5 = B, D

Upper Shield P/N 71-C11-10

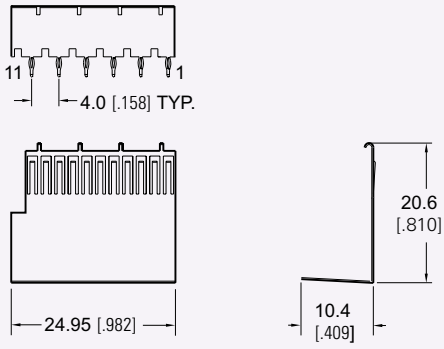

Є-Z met™ 2mm HM
Type L and N Receptacle, Right Angle

The Є-Z met™ type L daughtercard connector provides six special cavities designed for use with power or coaxial contacts. This connector also features a multifunction cavity for coding and pre alignment guides to prevent improper mating. The Type L connector can be used by itself or in combination with any Type A, B, C, M or N Є-Z met™ connector. For Coaxial, High Power, and High Current Contacts, see pages C-40 through C-47.

Consult factory for power and coax contact information.

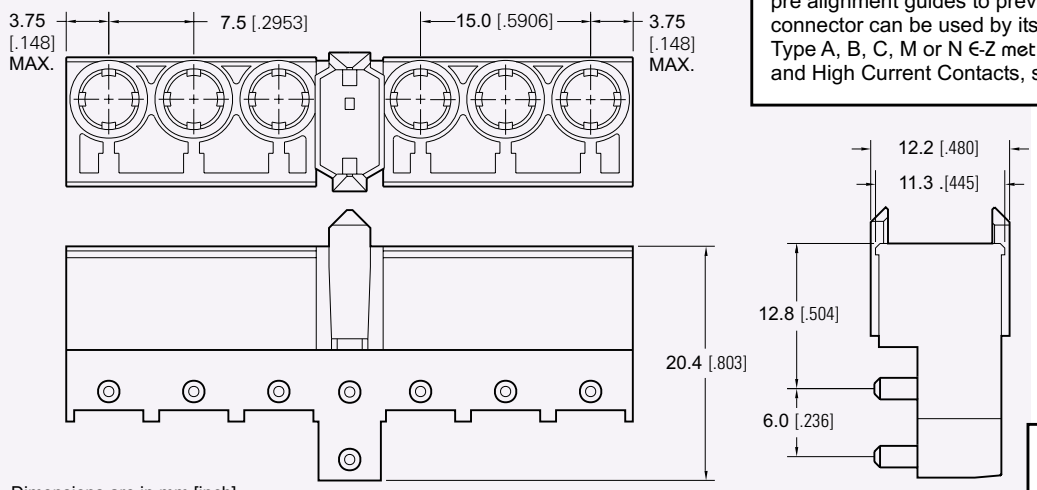

Dimensions are in mm [inch]

PC BOARD LAYOUT

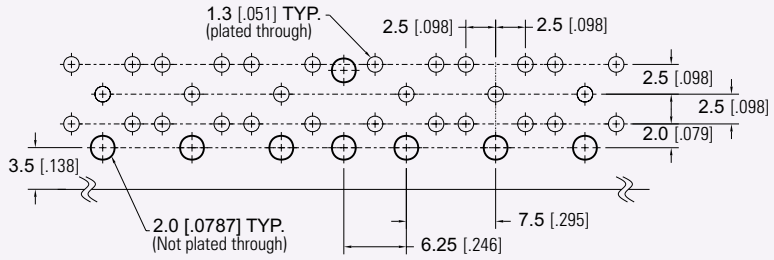

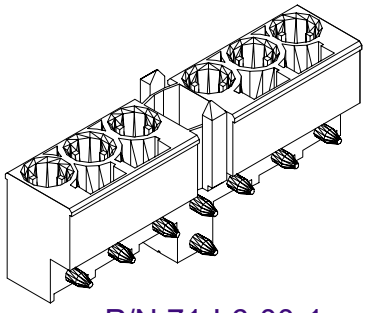

P/N 71-L6-00-1

Consult factory for power and coax contact information.

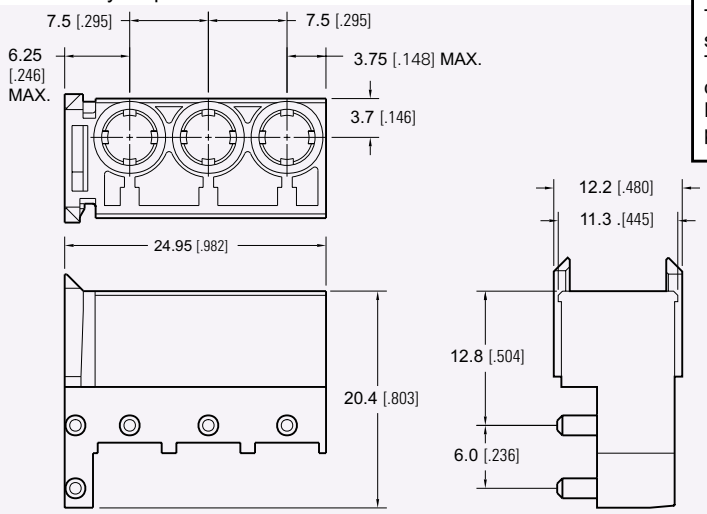

The Є-Z met™ Type N daughterboard connector provides 3 special cavities designed for us with power or coaxial contacts. The Type N connector is not designed to be used by itself, but can be combined with any Type A, B, L, or M Є-Z met™ connector. For Coaxial, High Power, and High Current Contacts, see pages C-40 through C-47.

PC BOARD LAYOUT

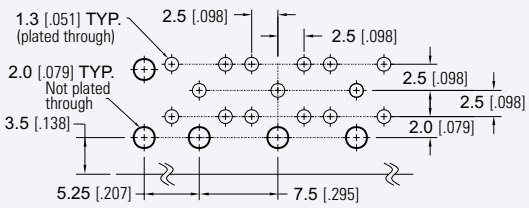

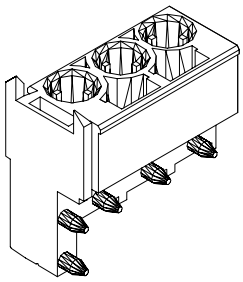

P/N 71-N3-00-1

E-Z met™ 2mm HM
Type M-25 Receptacle, Right Angle

The E-Z met™ Type M daughtercard connector provides 55 contacts and three special cavities designed for use with power or coaxial contacts. This connector also features a multifunction cavity for coding and pre alignment guides to prevent improper mating. These connectors are available either with or without integrated upper ground return shields. Lower ground return shield may be ordered separately. For Coaxial, High Power, and High Current Contacts, see pages C-40 through C-47.

Consult factory for power and coax contact information.

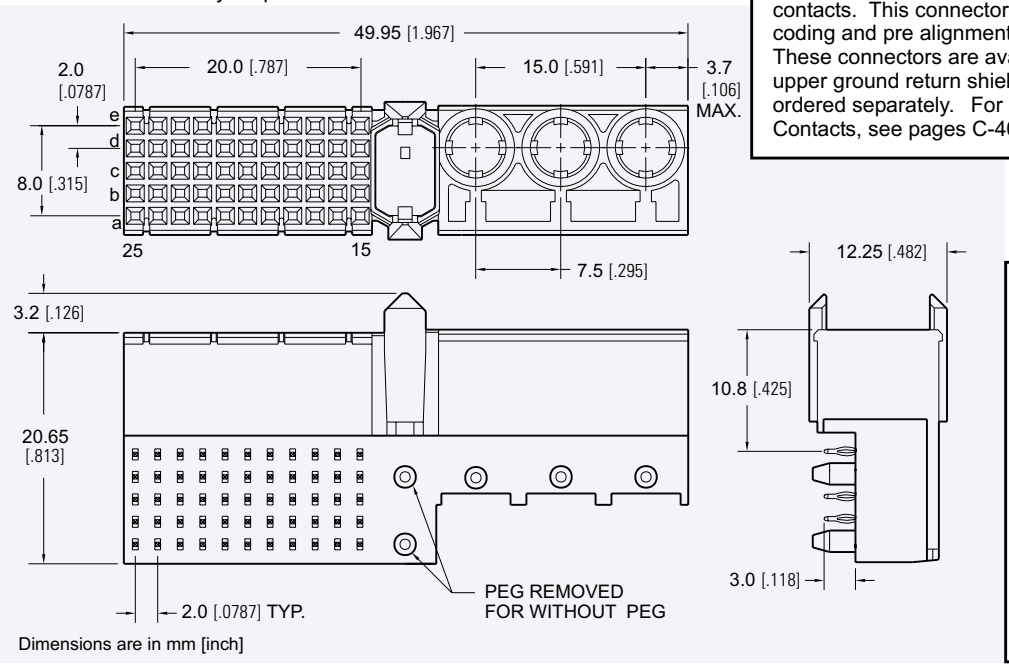

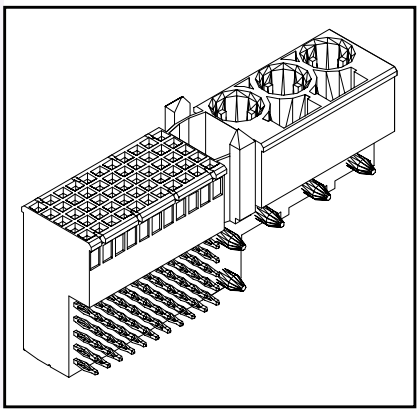

BOARD LAYOUT

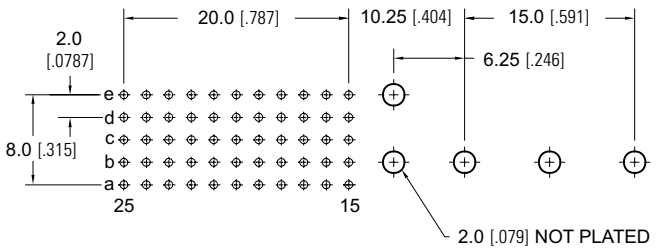

Lower Shield P/N 71-M25-01

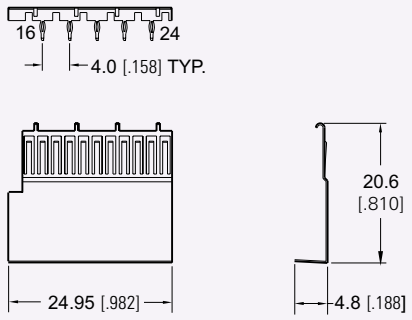

PART NUMBERING

71 — M25 X — X 0 — X

SERIES CODE
2mm Hard Metric Female

TYPE
M25

MOUNTING PEG
1 = Without Peg
Blank = With Peg

UPPER SHIELD
0 = Without Upper Shield
1 = With Upper Shield

CONTACT LOADING
1 = A, B, C, D, E
2 = A, B, C, D
3 = A, B, C
4 = A, D, E
5 = B, D

Upper Shield P/N 71-M25-10

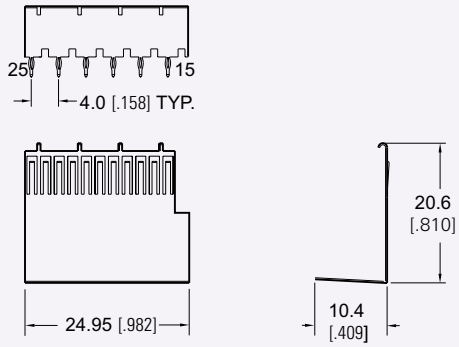

E-Z met™ 2mm HM
Backplane Layout for 3U and 6U CompactPCI®

The following backplane layouts are provided for typical 3U and 6U CompactPCI® backplane architecture. In accordance with IEC 61076-4-101, the connectors have been numbered from the top down, while the pin locations of the individual connectors are numbered from the bottom up.

3U CompactPCI® Backplane Layout

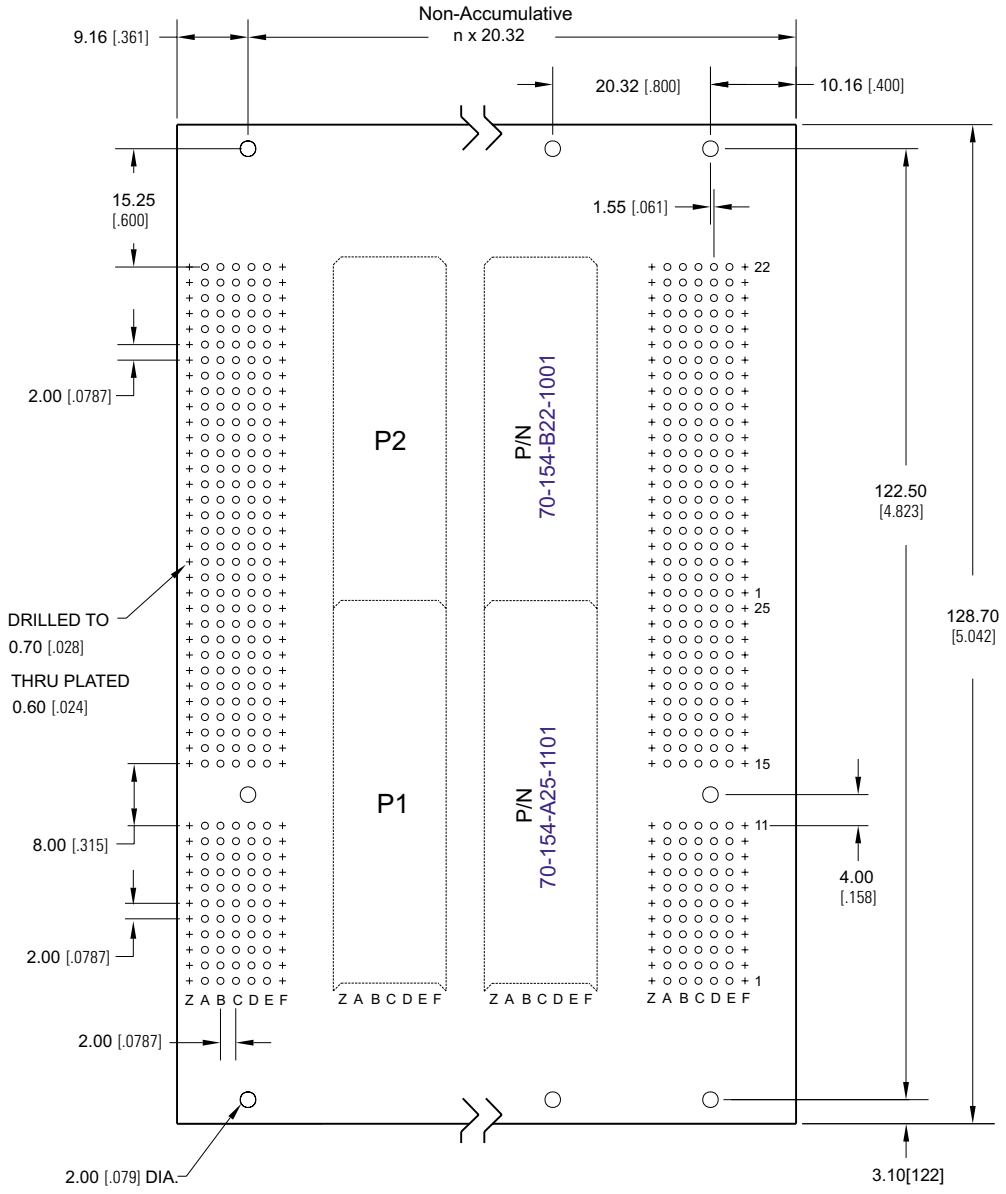

6U CompactPCI® Backplane Layout

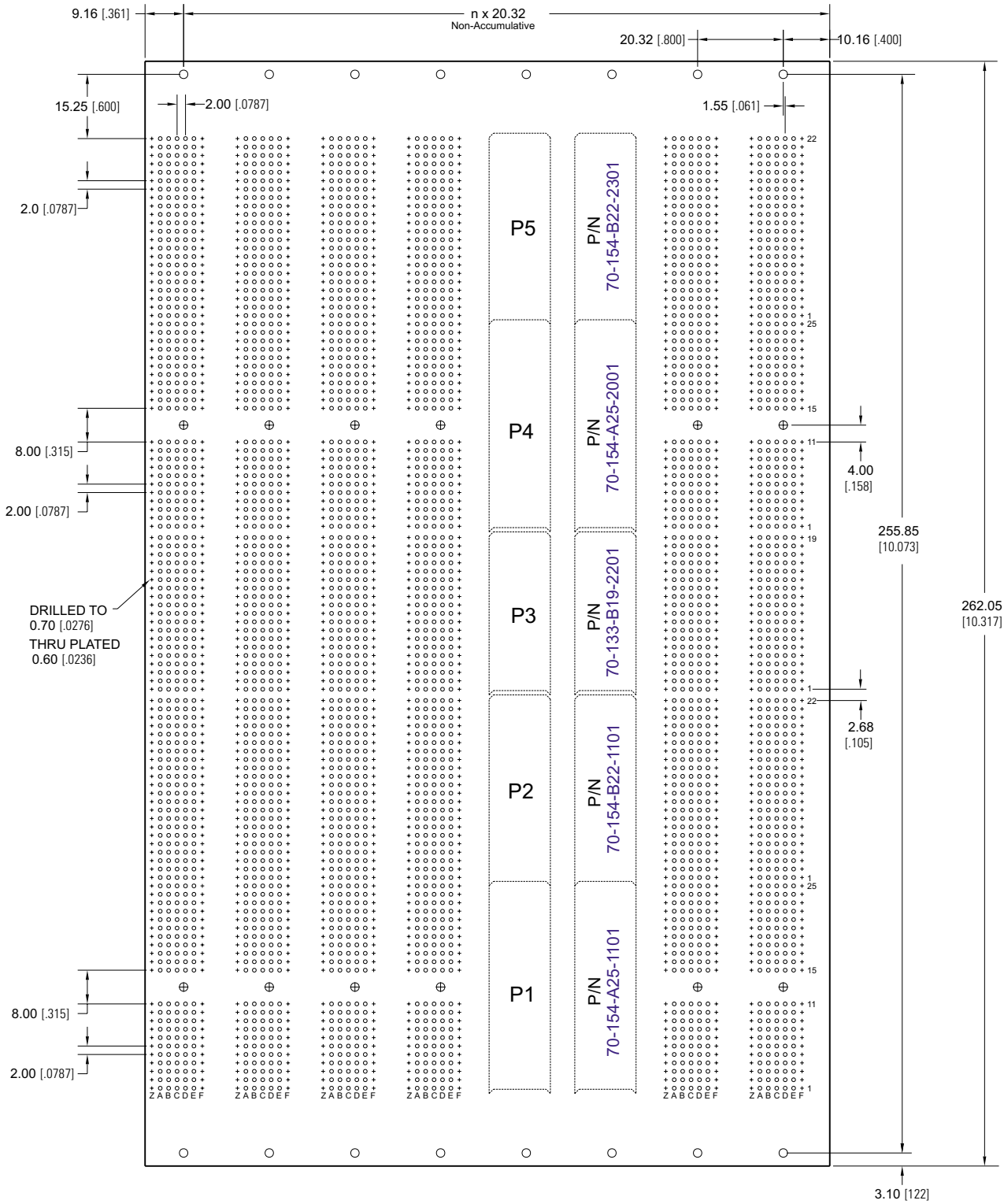

E-Z met™ 2mm HM
Customer Request Form

Use this request form, if you need a specially loaded connector for your application. Fill out the grid diagram for the connector type (A, B, C, D, E, M, and Monoblock 47) and mark with contact length (A, B, C,..., R, S, T).

Company: _____ Performance level: ☐ 1 ☐ 2

Name: _____ Drawing: ☐ yes ☐ no

Address: _____ Samples: ☐ yes ☐ no Quantity: _____

_____ Volume (pcs./year): _____

Phone: _____ Fax: _____ Special requirements: _____

E-Mail: _____ _____

Contact dimensions in mm [inch]

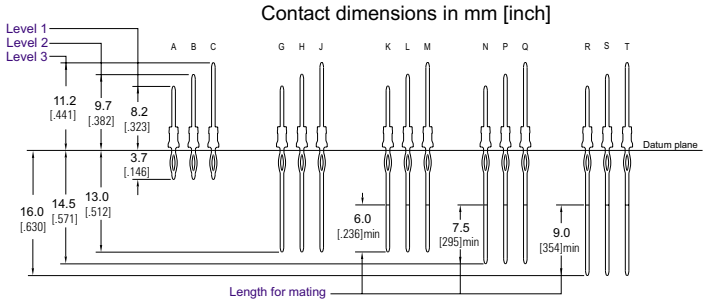

Type A

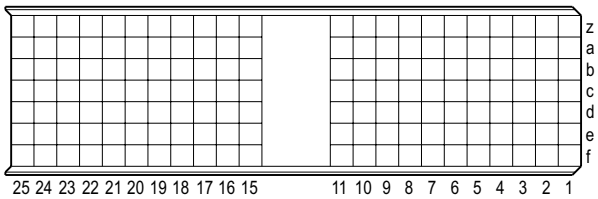

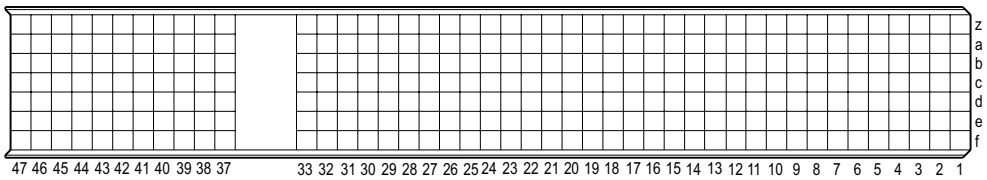

Type AB, B

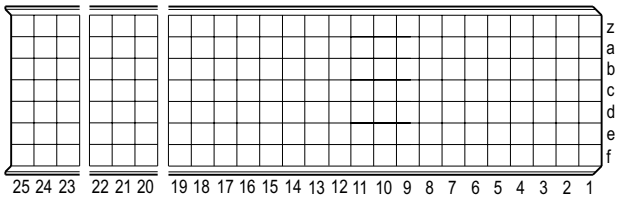

Type C

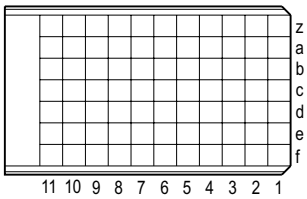

Type M

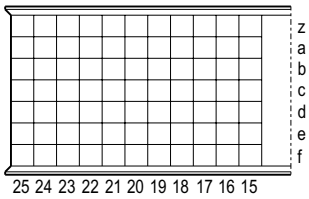

Type D

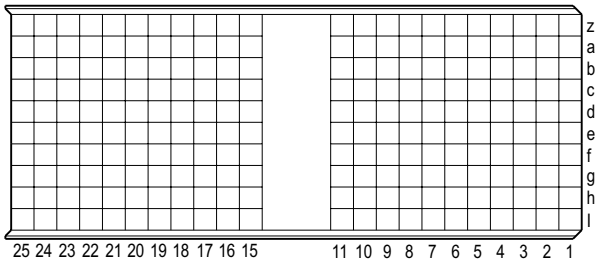

Type E

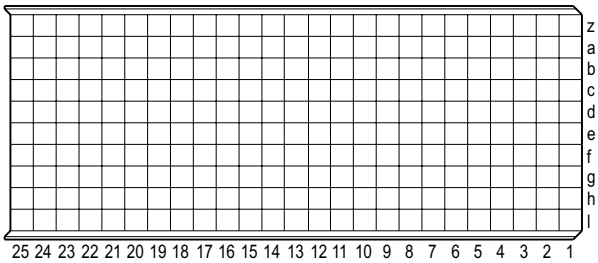

ELECTRONIC CONNECTOR SERVICE INC. 11880 WESTERN AVE. STANTON, CA 90680 TOLL FREE (877) ECS-CONN TEL (714) 895-6351 FAX (714) 894-1858
WWW.ECSCONN.COM

7400 Series Futurebus
4 Row Male Header

Specifications

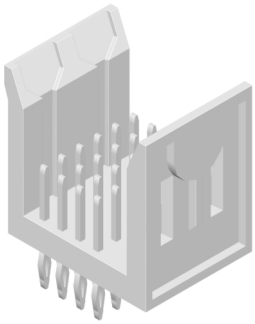

Insulator Material: Liquid Crystal Polymer (LCP) 94V-O, UL Recognized.
Contact Material: Phosphor Bronze or Brass
Contact Plating: Gold and/or Tin over .000050" Ni (See contact plating options)
Insulation Resistance: 1000 M ohms min.
Contact Resistance: 30 m ohms max.
Dielectric Withstand Voltage: 1000 VAC
Current Rating: 1 AMP
Operating Temperature: -65°C To +125°C
UL File Numbers: E146967 & E176234

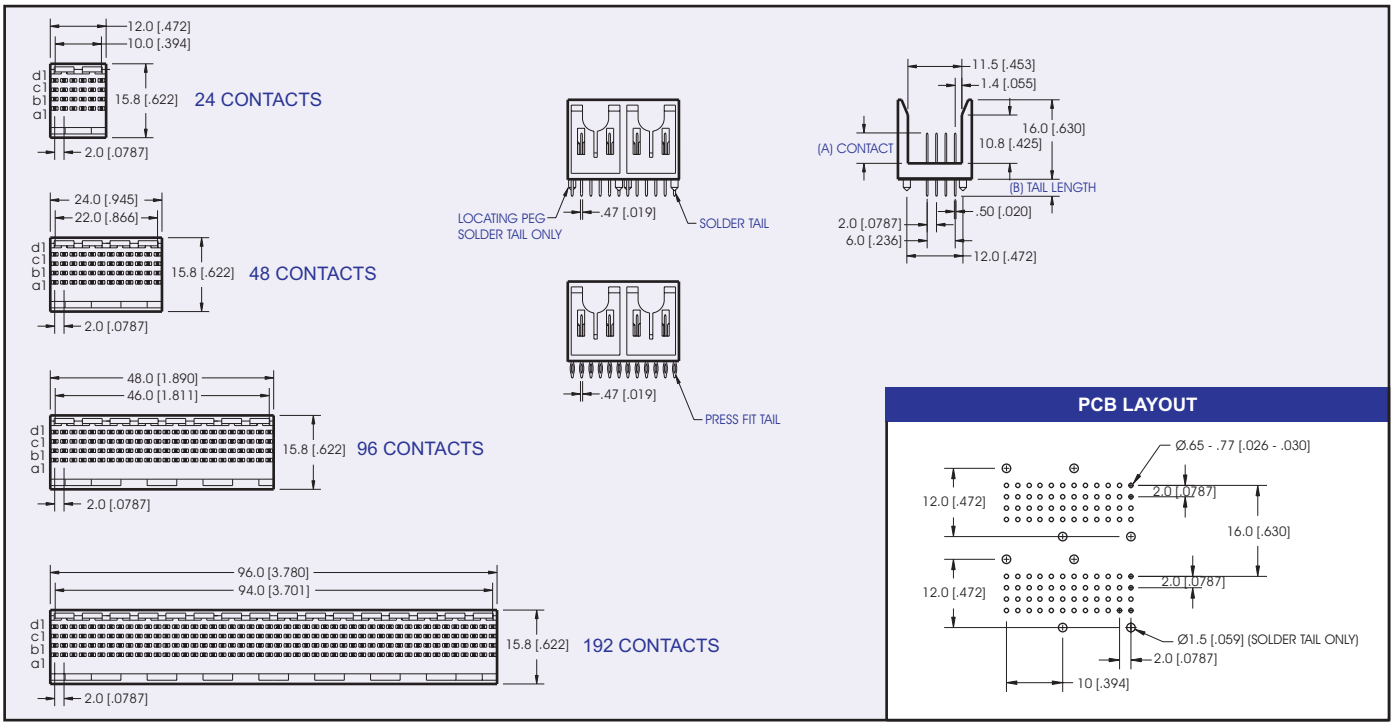

DIMENSIONS ARE IN MM & [INCHES]

PART NUMBERING

74 — XXX — 4 X XXX — XX

SERIES CODE

NO. OF CONTACTS
024, 048, 096, 192

TERMINATION METHOD
1 = PRESS FIT
2 = DIP SOLDER

CONTACT PLATING
.000050" Nickel underplate

MATING	TAIL
01 = Au Flash	100µ"Sn
10 = 10µ"Au	100µ"Sn
30 = 30µ"Au	100µ"Sn
90 = 30µ"Au	30µ"Au

CONTACT LOADING

*PF = PRESS FIT
DS = DIP SOLDER

P/N CODE	001	002	003	101	102	103	201	202	203	301	302	303	401	402	403
TERMINATION*	PF/DS	PF	PF	PF/DS	PF	PF	PF/DS	PF	PF	PF/DS	PF	PF	PF/DS	PF	PF
(A) CONTACT	5.0mm	5.0mm	5.0mm	5.75mm	5.75mm	5.75mm	6.5mm	6.5mm	6.5mm	7.25mm	7.25mm	7.25mm	8.0mm	8.0mm	8.0mm
(B) TAIL LENGTH	4.3mm	13.6mm	17.0mm	4.3mm	13.6mm	17.0mm	4.3mm	13.6mm	17.0mm	4.3mm	13.6mm	17.0mm	4.3mm	13.6mm	17.0mm

FOR CUSTOM LOADED CONNECTORS PLEASE USE CUSTOMER REQUEST FORM ON PAGE D-47

7300 Series Futurebus
4 Row Right Angle Female

Specifications

Insulator Material: Liquid Crystal Polymer (LCP) 94V-O, UL Rated.
Contact Material: Phosphor Bronze
Contact Plating: Gold and Tin over .000050" Ni (See contact plating options)
Insulation Resistance: 1000 M ohms min.
Contact Resistance: 30 m ohms max.
Dielectric Withstand Voltage: 1000 VAC
Current Rating: 1 AMP
Operating Temperature: -65°C To +125°C
UL File Numbers: E146967 & E176234

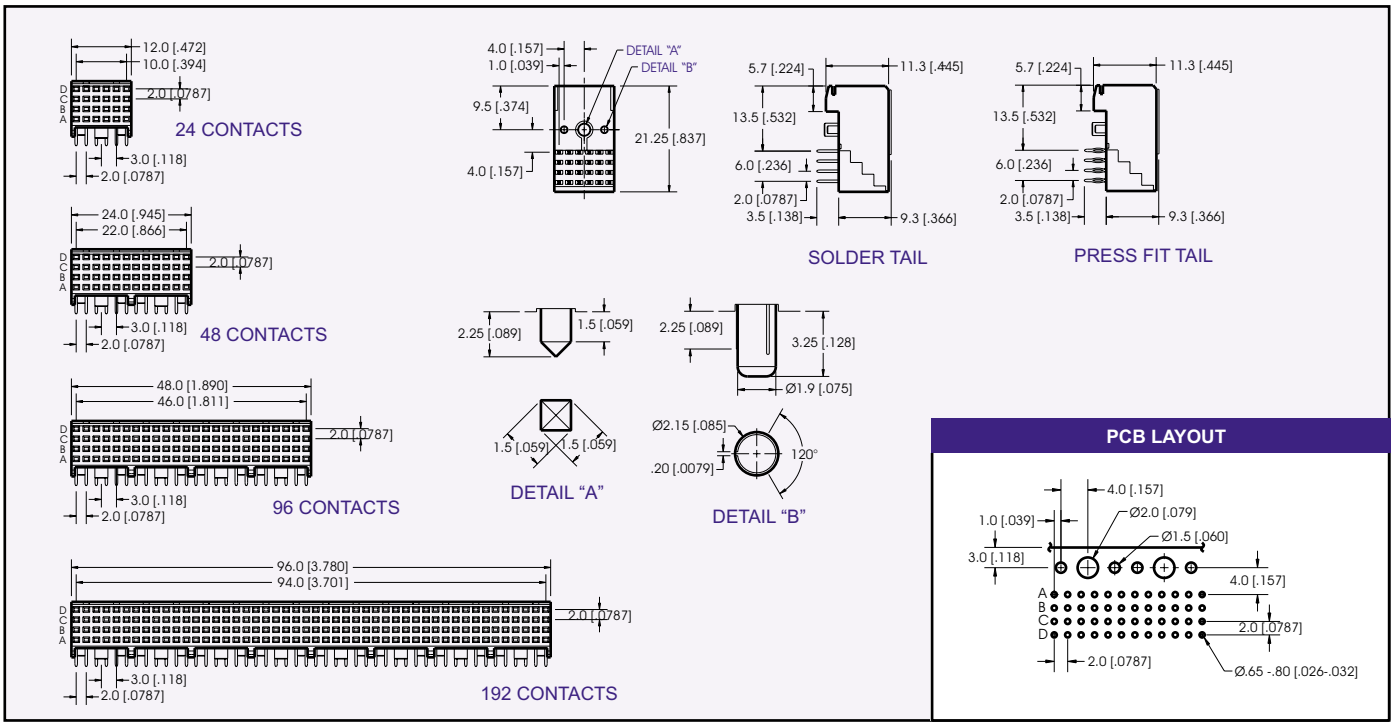

DIMENSIONS ARE IN MM & [INCHES]

PART NUMBERING

73 — XXX — 4 X 001 — XX

SERIES CODE

NO. OF CONTACTS
024, 048, 096, 192

TERMINATION METHOD
1 = PRESS FIT
2 = DIP SOLDER

CONTACT PLATING
.000050" Nickel underplate

	CONTACT	TAIL
01	= Au Flash	100µ"Sn
10	= 10µ"Au	100µ"Sn
30	= 30µ"Au	100µ"Sn

7400 Series Futurebus
5 Row Male Header

Specifications

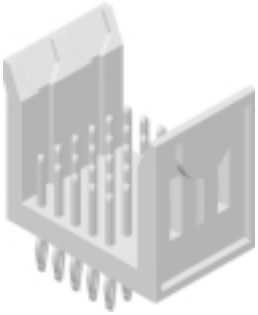

Insulator Material: Liquid Crystal Polymer (LCP) 94V-O, UL Recognized.
Contact Material: Phosphor Bronze
Contact Plating: Gold and/or Tin over .000050" Ni (See contact plating options)
Insulation Resistance: 1000 M ohms min.
Contact Resistance: 30 m ohms max.
Dielectric Withstand Voltage: 1000 VAC
Current Rating: 1 AMP
Operating Temperature: -65°C To +125°C
UL File Numbers: E146967 & E176234

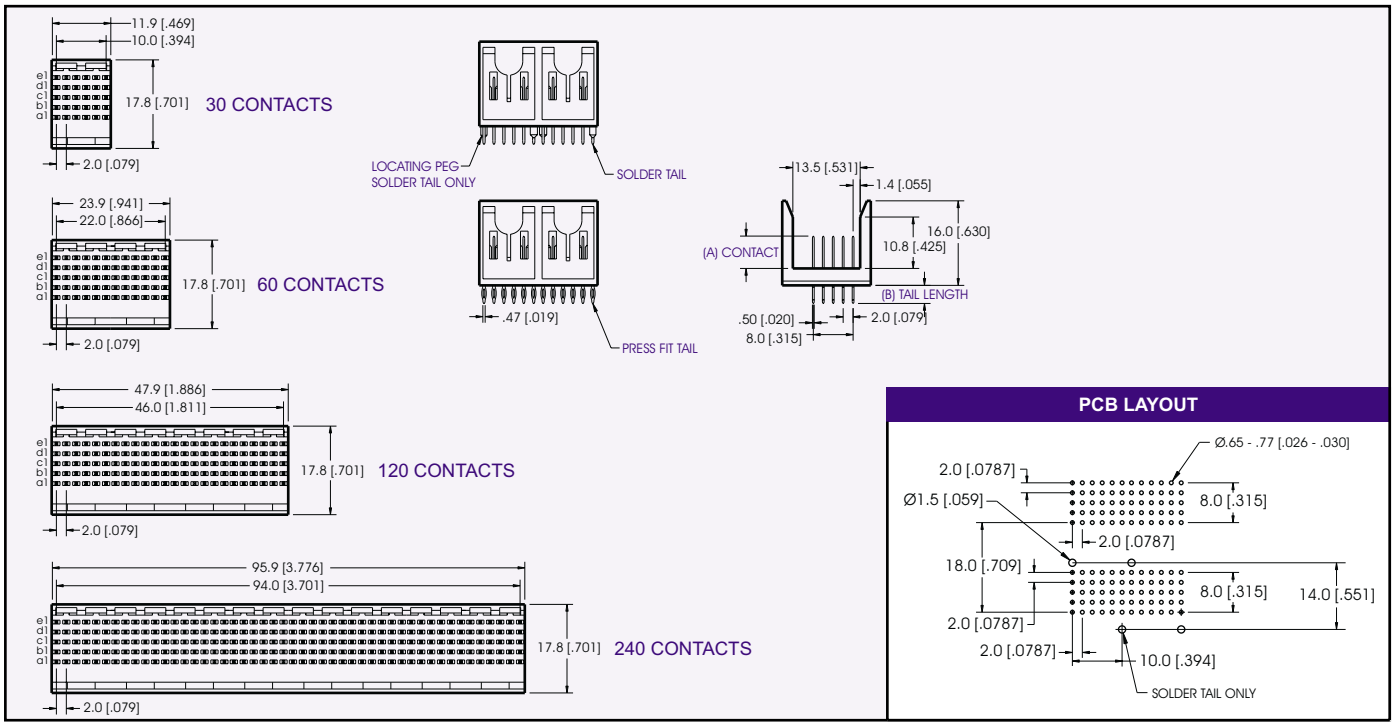

DIMENSIONS ARE IN MM & [INCHES]

PART NUMBERING

74 — XXX — 5 X XXX — XX

SERIES CODE

NO. OF CONTACTS
030, 060, 120, 240

TERMINATION METHOD
1 = PRESS FIT
2 = DIP SOLDER

CONTACT LOADING

CONTACT PLATING
.000050" Nickel underplate

MATING	TAIL
01 = Au Flash	100µ"Sn
10 = 10µ"Au	100µ"Sn
30 = 30µ"Au	100µ"Sn
90 = 30µ"Au	30µ"Au

P/N CODE	001	002	003	101	102	103	201	202	203	301	302	303	401	402	403
TERMINATION*	PF/DS	PF	PF	PF/DS	PF	PF	PF/DS	PF	PF	PF/DS	PF	PF	PF/DS	PF	PF
(A) CONTACT	5.0mm	5.0mm	5.0mm	5.75mm	5.75mm	5.75mm	6.5mm	6.5mm	6.5mm	7.25mm	7.25mm	7.25mm	8.0mm	8.0mm	8.0mm
(B) TAIL LENGTH	4.3mm	13.6mm	17.0mm	4.3mm	13.6mm	17.0mm	4.3mm	13.6mm	17.0mm	4.3mm	13.6mm	17.0mm	4.3mm	13.6mm	17.0mm

*PF = PRESS FIT
DS = DIP SOLDER

FOR CUSTOM LOADED CONNECTORS PLEASE USE CUSTOMER REQUEST FORM ON PAGE D-47

7300 Series Futurebus
5 Row Right Angle Female

Specifications

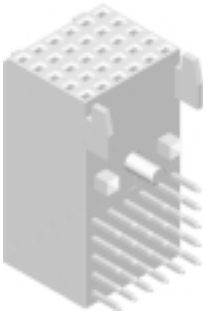

Insulator Material: Liquid Crystal Polymer (LCP) 94V-O, UL Rated.
Contact Material: Phosphor Bronze
Contact Plating: Gold and Tin over .000050" Ni (See contact plating options)
Insulation Resistance: 1000 M ohms min.
Contact Resistance: 30 m ohms max.
Dielectric Withstand Voltage: 1000 VAC
Current Rating: 1 AMP
Operating Temperature: -65°C To +125°C
UL File Numbers: E146967 & E176234

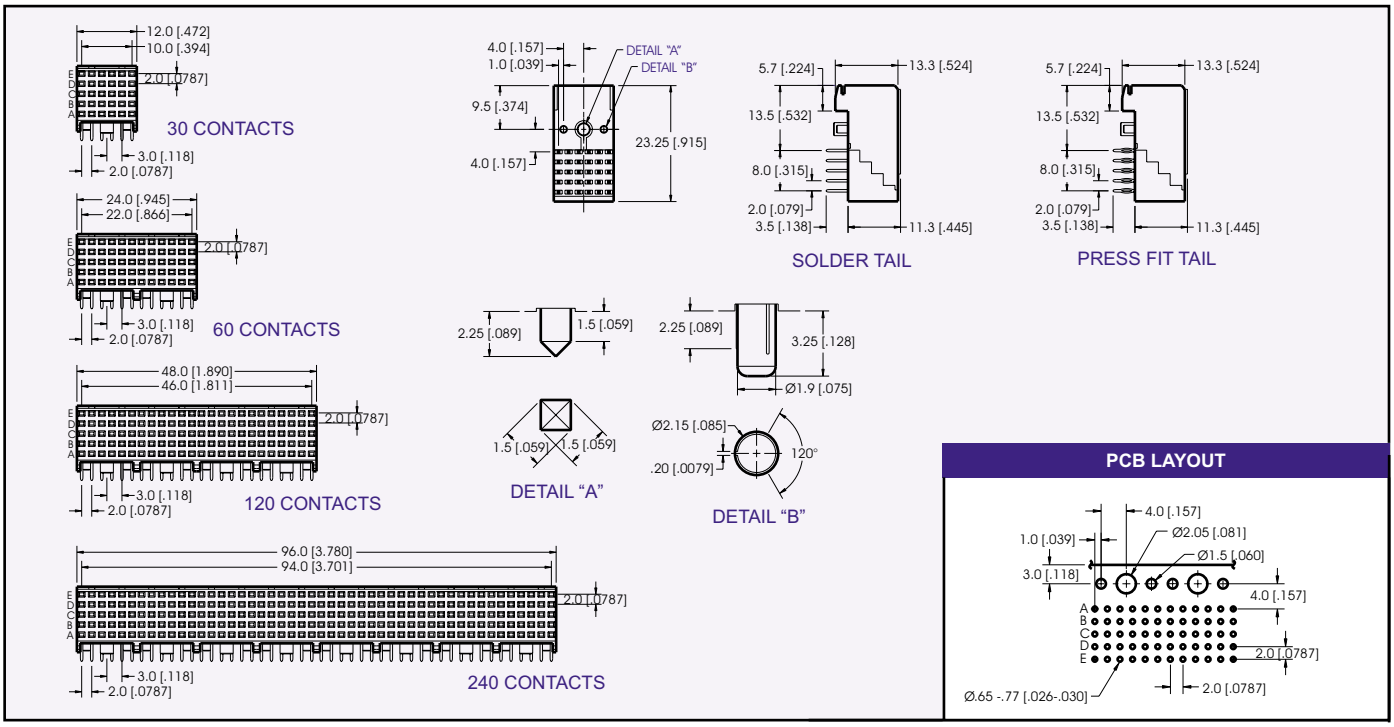

DIMENSIONS ARE IN MM & [INCHES]

PART NUMBERING

73 — XXX — 5 X 001 — XX

SERIES CODE

NO. OF CONTACTS
030, 060, 120, 240

TERMINATION METHOD
1 = PRESS FIT
2 = DIP SOLDER

CONTACT PLATING
.000050" Nickel underplate

	CONTACT	TAIL
01	= Au Flash	100µ"Sn
10	= 10µ"Au	100µ"Sn
30	= 30µ"Au	100µ"Sn

7300 Series Futurebus
4 Row Verticle Female 12.64mm Height

Specifications

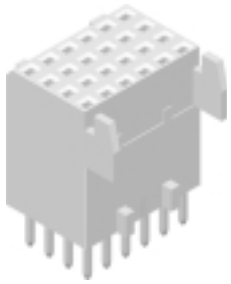

Insulator Material: Liquid Crystal Polymer (LCP) 94V-O, UL Recognized.
Contact Material: Phosphor Bronze
Contact Plating: Gold and Tin over .000050" Ni (See contact plating options)
Insulation Resistance: 1000 M ohms min.
Contact Resistance: 30 m ohms max.
Dielectric Withstand Voltage: 1000 VAC
Current Rating: 1 AMP
Operating Temperature: -65°C To +125°C
UL File Numbers: E146967 & E176234

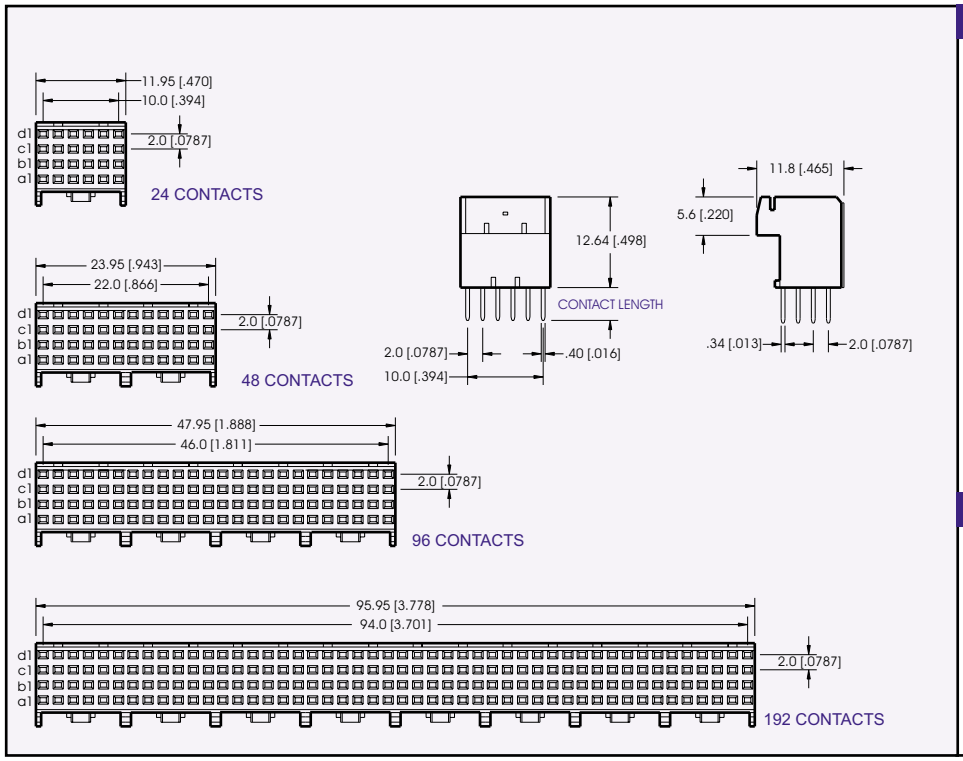

APPLICATION EXAMPLE

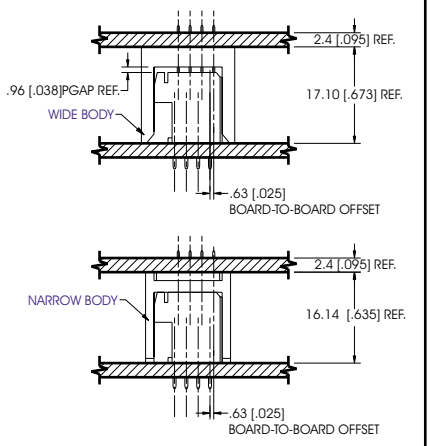

PCB LAYOUT

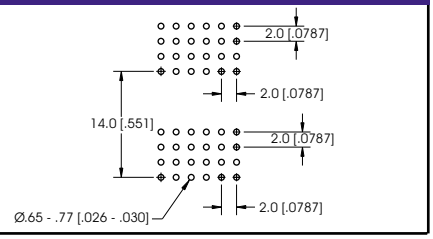

DIMENSIONS ARE IN MM & [INCHES]

PART NUMBERING

73 — XXX — 42 XXX — XX

SERIES CODE

NO. OF CONTACTS
024, 048, 096, 192

CONTACT LENGTH
201 = 3.45 [.136]
202 = 4.25 [.167]

CONTACT PLATING
.000050" Nickel underplate

MATING	TAIL
01 = Au Flash	100µ"Sn
10 = 10µ"Au	100µ"Sn
30 = 30µ"Au	100µ"Sn

CONSULT FACTORY FOR CUSTOM CONNECTORS BUILT TO YOUR SPECIFICATION

ELECTRONIC CONNECTOR SERVICE INC. 11880 WESTERN AVE. STANTON, CA 90680 TOLL FREE (877) ECS-CONN TEL (714) 895-6351 FAX (714) 894-1858
WWW.ECSCONN.COM

7300 Series Futurebus
4 Row Verticle Female 16.6mm Height

Specifications

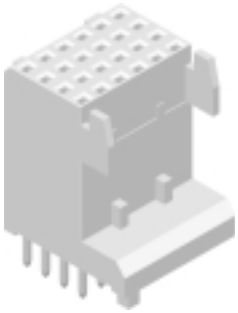

Insulator Material: Liquid Crystal Polymer (LCP) 94V-O, UL Recognized.
Contact Material: Phosphor Bronze
Contact Plating: Gold and Tin over .000050" Ni (See contact plating options)
Insulation Resistance: 1000 M ohms min.
Contact Resistance: 30 m ohms max.
Dielectric Withstand Voltage: 1000 VAC
Current Rating: 1 AMP
Operating Temperature: -65°C To +125°C
UL File Numbers: E146967 & E176234

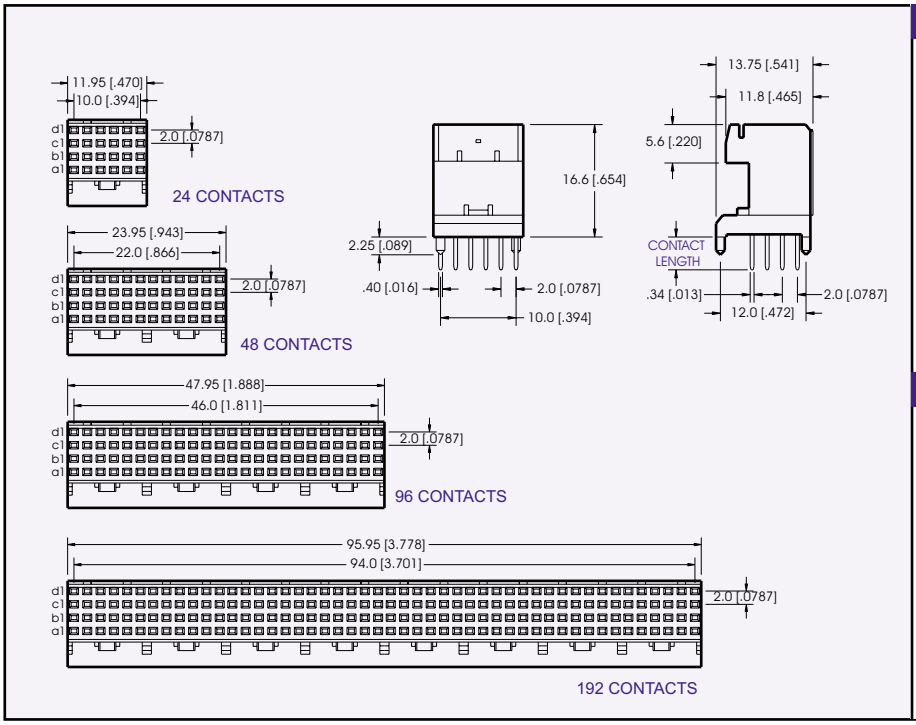

APPLICATION EXAMPLE

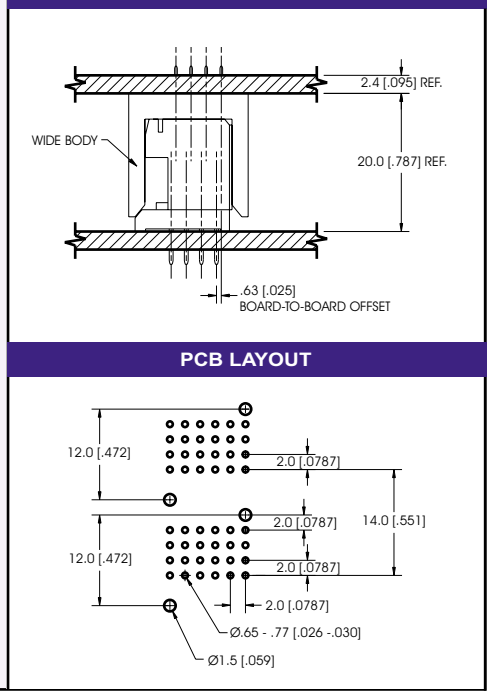

DIMENSIONS ARE IN MM & [INCHES]

PART NUMBERING

73 — XXX — 42 XXX — XX

SERIES CODE

NO. OF CONTACTS
024, 048, 096, 192

CONTACT LENGTH
202 = 3.45 [.136]
203 = 4.25 [.167]

CONTACT PLATING
.000050" Nickel underplate

	MATING	TAIL
01	= Au Flash	100µ"Sn
10	= 10µ"Au	100µ"Sn
30	= 30µ"Au	100µ"Sn

7400 Series Futurebus
4 Row Header Power

Specifications

Insulator Material: Liquid Crystal Polymer (LCP) 94V-O, UL Recognized.
Contact Material: Copper Alloy
Contact Plating: Gold and/or Tin over .000050" Ni (See contact plating options)
Insulation Resistance: 1000 M ohms min.
Contact Resistance: 30 m ohms max.
Dielectric Withstand Voltage: 1000 VAC
Current Rating: 3 AMP
UL File Numbers: E146967 & E176234

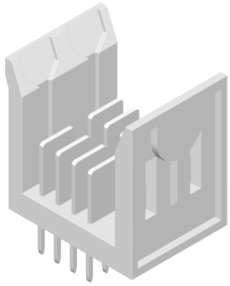

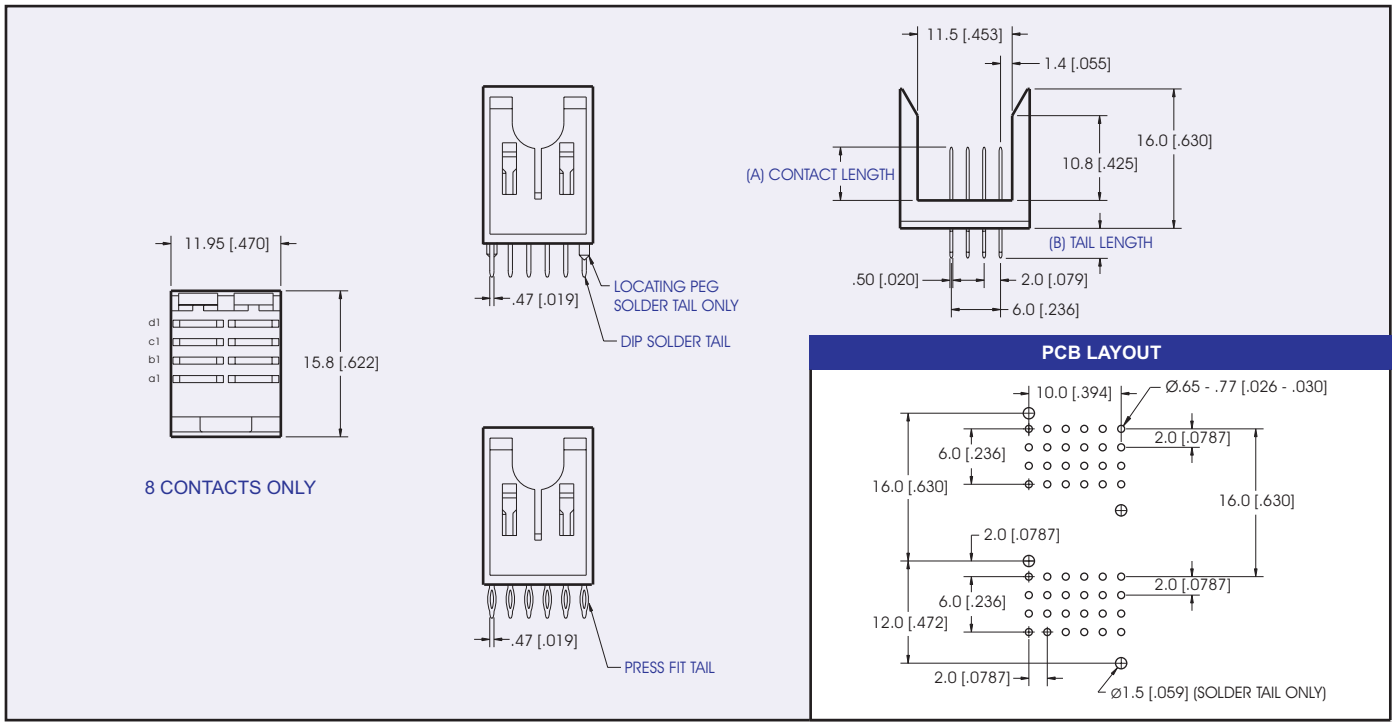

DIMENSIONS ARE IN MM & [INCHES]

PART NUMBERING

74 — 008 — 4 X XXX — XX

SERIES CODE — 74

TERMINATION METHOD
1 = PRESS FIT
2 = DIP SOLDER

CONTACT PLATING
.000050" Nickel underplate

	MATING	TAIL
01	= Au Flash	100µ"Sn
10	= 10µ"Au	100µ"Sn
30	= 30µ"Au	100µ"Sn

CONTACT LOADING

*PF = PRESS FIT
DS = DIP SOLDER

P/N CODE	001	002	003	101	102	103	201	202	203
TERMINATION*	PF/DS	PF	PF	PF/DS	PF	PF	PF/DS	PF	PF
(A) CONTACT	6.5mm	6.5mm	6.5mm	7.25mm	7.25mm	7.25mm	8.0mm	8.0mm	8.0mm
(B) TAIL LENGTH	4.3mm	13.6mm	17.0mm	4.3mm	13.6mm	17.0mm	4.3mm	13.6mm	17.0mm

FOR CUSTOM LOADED CONNECTORS PLEASE USE CUSTOMER REQUEST FORM ON PAGE D-47

7300 Series Futurebus
4 Row Right Angle Female Power

Specifications

Insulator Material: Liquid Crystal Polymer (LCP) 94V-O, UL Recognized.
Contact Material: Phosphor Bronze
Contact Plating: Gold and Tin over .000050" Ni (See contact plating options)
Insulation Resistance: 1000 M ohms min.
Contact Resistance: 30 m ohms max.
Dielectric Withstand Voltage: 1000 VAC
Current Rating: 3 AMP
Operating Temperature: -65°C To +125°C
UL File Numbers: E146967 & E176234

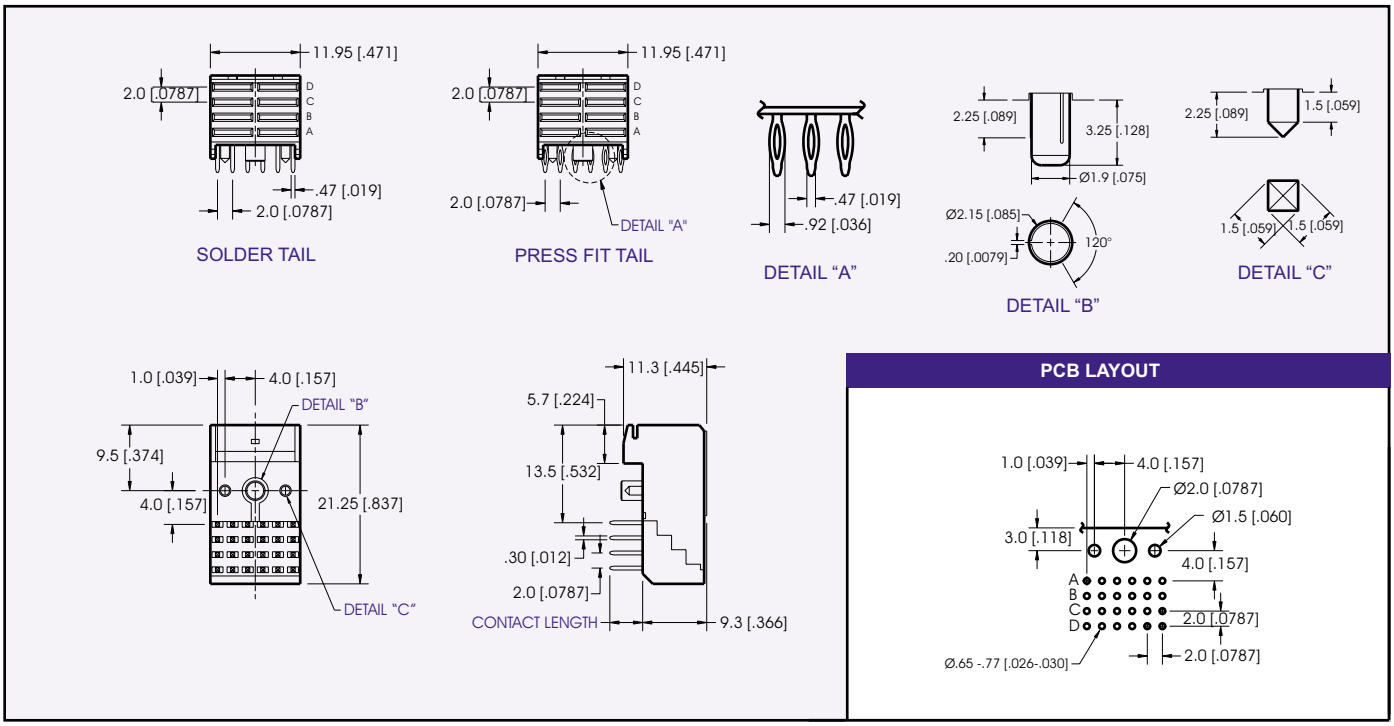

DIMENSIONS ARE IN MM & [INCHES]

PART NUMBERING

73 — 008 — 4 X XXX — XX

SERIES CODE

TERMINATION METHOD
1 = PRESS FIT
2 = DIP SOLDER

CONTACT LENGTH
001 = 2.9 [.114]
002 = 3.5 [.138]

CONTACT PLATING
.000050" Nickel underplate

MATING	TAIL
01 = Au Flash	100µ"Sn
10 = 10µ"Au	100µ"Sn
30 = 30µ"Au	100µ"Sn

7400 Series Futurebus
4 Row Shroud

Specifications

Insulator Material: Liquid Crystal Polymer (LCP)
94V-O, UL Recognized.
Insulation Resistance: 1000 M ohms min.
Dielectric Withstand Voltage: 1000 VAC
Operating Temperature: -65°C To +125°C
UL File Numbers: E146967 & E176234

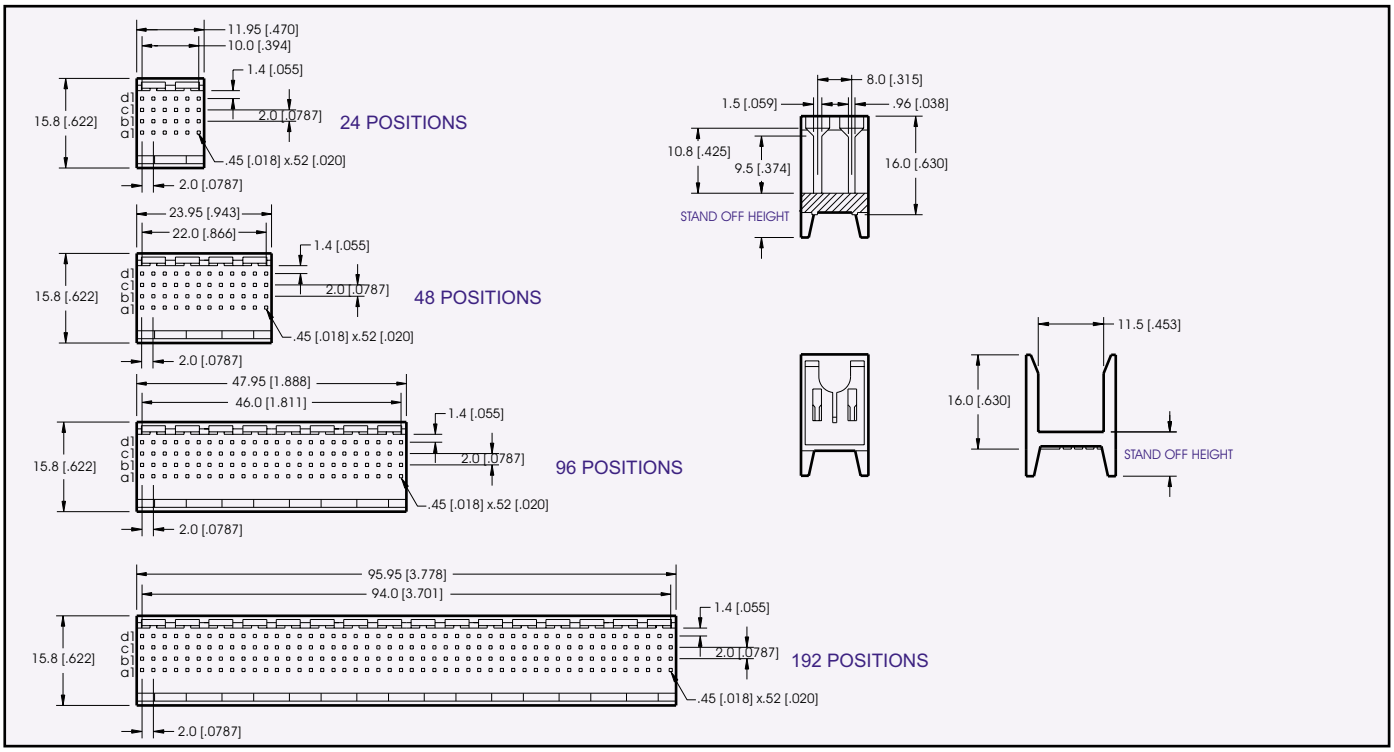

DIMENSIONS ARE IN MM & [INCHES]

PART NUMBERING

74 — XXX — 4S XXX

SERIES CODE — 74

NO. OF POSITIONS — XXX
024, 048, 096, 192

STAND OFF HEIGHT — XXX
240 = 2.40 [.095]
440 = 4.40 [.173]
690 = 6.90 [.272]

7400 Series Futurebus
5 Row Shroud

Specifications

Insulator Material: Liquid Crystal Polymer (LCP)
94V-O, UL Recognized.
Insulation Resistance: 1000 M ohms min.
Dielectric Withstand Voltage: 1000 VAC
Operating Temperature: -65°C To +125°C
UL File Numbers: E146967 & E176234

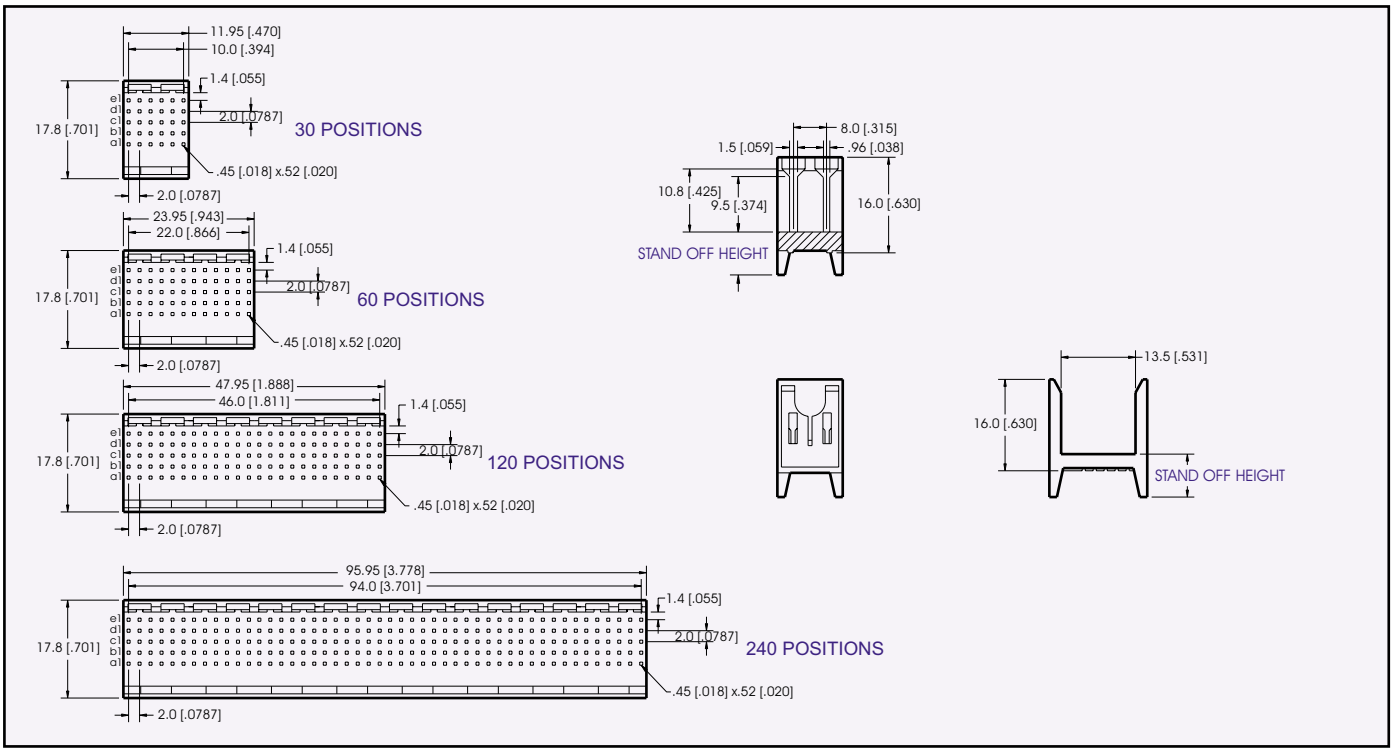

DIMENSIONS ARE IN MM & [INCHES]

PART NUMBERING

74 — XXX — 5S XXX

SERIES CODE

NO. OF POSITIONS
030, 060, 120, 240

STAND OFF HEIGHT
240 = 2.40 [.095]
440 = 4.40 [.173]
690 = 6.90 [.272]

7400 Series Futurebus
Customer Request Form

Use this request form if you need a specially loaded connector for your application. Fill out the grid diagram for the connector type and mark with contact length (A, B, C,..).

Company: _____ Drawing: ☐ yes ☐ no

Name: _____ Samples: ☐ yes ☐ no Quantity: _____

Address: _____ Volume (pcs./year): _____

_____ Special requirements: _____

Phone: _____ Fax: _____ _____

E-Mail: _____ _____

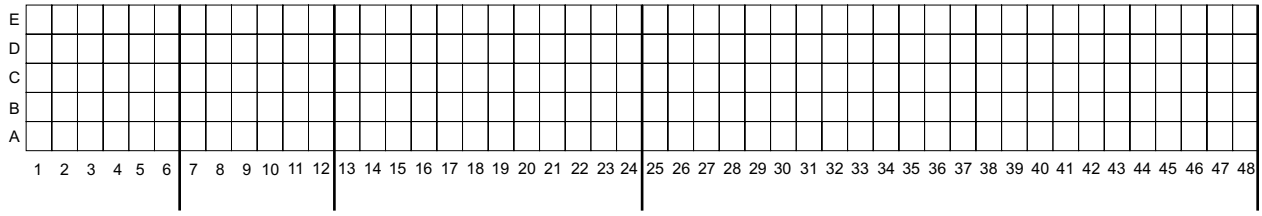

7400 SERIES MALE SIGNAL CONNECTOR

Termination: ☐ Press Fit ☐ Solder Tail

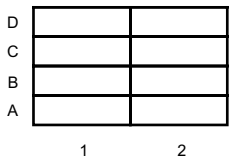

7400 SERIES POWER CONNECTOR

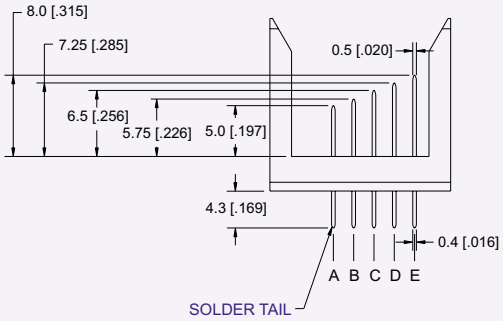

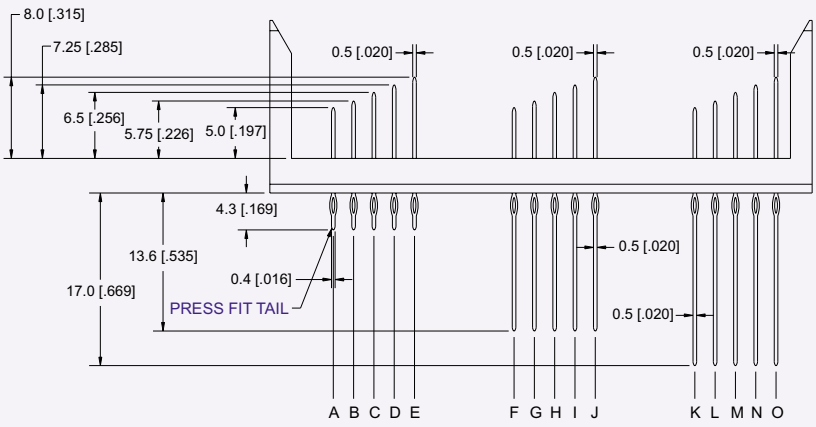

SIGNAL CONTACTS

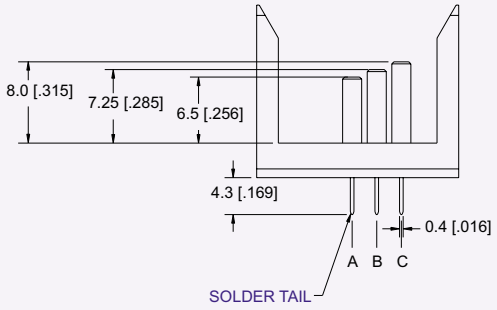

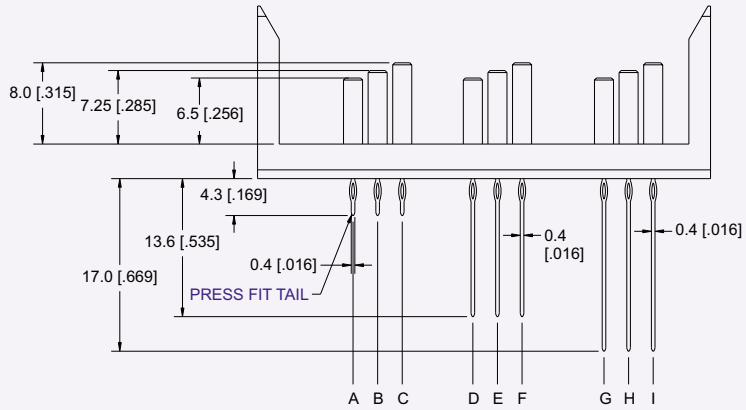

POWER CONTACTS

CONTACT DIMENSIONS IN MM [INCH]

ELECTRONIC CONNECTOR SERVICE INC. 11880 WESTERN AVE. STANTON, CA 90680 TOLL FREE (877) ECS-CONN TEL (714) 895-6351 FAX (714) 894-1858
WWW.ECSCONN.COM

8000 Series D-Subminiature Specifications

Introduction:

The ECS 8000 Series D-Subminiature Connectors provide an industry standard I/O interface. A wide variety of styles are available including: Press Fit, Thru-Hole, Solder Cup, Right Angle, and Surface Mount terminations in Standard, Low Profile, High Profile, and High Density configurations. ECS D-Subminiature connectors were designed in accordance with all applicable requirements of MIL-C-24308 D, EIA Standard RS-232, RS-449, and IEC 78-B-106. With a wide variety of industry standard mounting options available, the ECS D-Subminiature connectors mate and are compatible with all industry standard D-Subminiature connectors.

Specifications

	Insulator Material	Contact Material	Shell Material	Current Rating	Contact Resistance	Dielectric Withstand Voltage	Insulator Resistance	Operating Temperature
D-Subminiature	Glass Filled PBT UL 94 V-0 Rated. Surface Mount: High temp. Plastic 94 V-0 Rated.	**Receptacle:** Phosphor Bronze **Plug:** Brass **Plating:** Selective gold over 50µ" Nickel See part number for gold thickness.	Steel,Tin Plated Nickel and Chromate Plating available upon request.	5 Amp	<20m max.	1000M V AC One Minute	>5000M min.	-55°C to +125°C SMT Connectors Max. Processing Temp.: 230°C for 60 Seconds
High Density D-Subminature	Glass Filled PBT UL 94 V-0 Rated. Surface Mount: High temp. Plastic 94 V-0 Rated.	**Receptacle:** Phosphor Bronze **Plug:** Brass **Plating:** Selective gold over 50µ" Nickel See part number for gold thickness.	Steel,Tin Plated Nickel and Chromate Plating available upon request.	3 Amp	<20m max.	1000M V AC One Minute	>5000M min.	-55°C to +125°C SMT Connectors Max. Processing Temp.: 230°C for 60 Seconds
Press Fit D-Subminature	Glass Filled PBT UL 94 V-0 Rated.	Phosphor Bronze **Plating:** Selective gold over 50µ" Nickel See part number for gold thickness.	Steel,Tin Plated	5 Amp	<20m max.	1000M V AC One Minute	>5000M min.	-55°C to +125°C
SCSI	Glass Filled PBT UL 94 V-0 Rated.	Phosphor Bronze **Plating:** Selective gold over 50µ" Nickel See part number for gold thickness.	Die Cast Zinc, Nickel Plated	1 Amp	<20m max.	1000M V AC One Minute	>5000M min.	-55°C to +125°C

Recognized under the recognized component Program of Underwriters Laboratories, Inc.

8000 Series D-Subminiature Shell Sizes

Shell Size	D-Sub Connector	High Density D-Sub Connector	Shell Dimensions
E	9 POSITION	15 POSITION	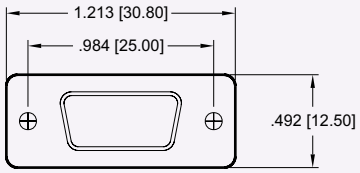
A	15 POSITION	26 POSITION	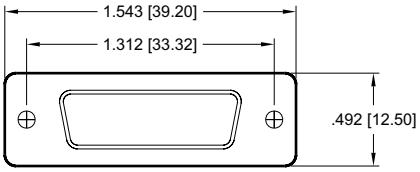
B	25 POSITION	44 POSITION	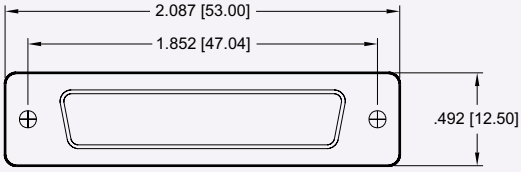
C	37 POSITION	62 POSITION	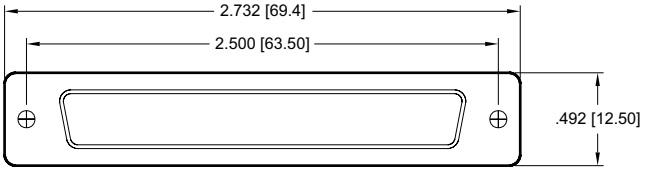
D	50 POSITION	78 POSITION	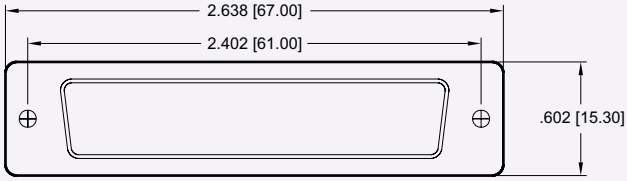

8000 Series D-Subminiature PCB Layouts

PRESS FIT

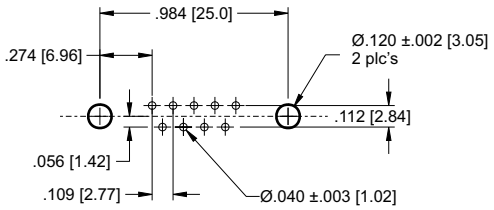

9 Positons

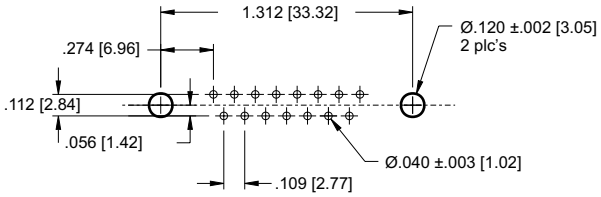

15 Positions

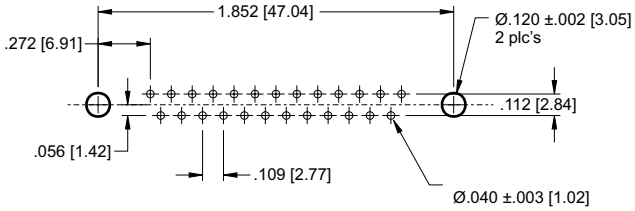

25 Positions

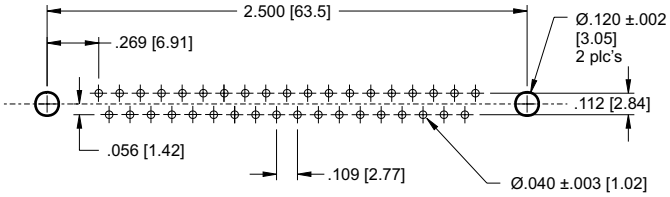

37 Positions

Hole Size Requirements:
Drilled Hole Diameter: Ø.0453 ±.003 [1.15]
Plating: .001 [.025] - .003 [.076] copper and
.0003 [.008] Tin Lead.
Finished Hole Diameter: Ø.040 ± .003 [1.02]

Dimensions are in Inches [mm]

All Tolerances are ±.005, Unless Otherwise Noted.

STRAIGHT PCB SOLDER

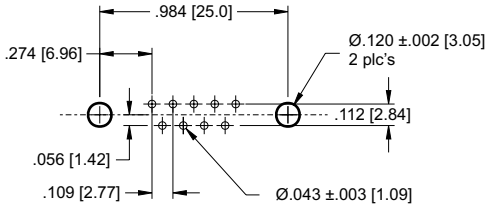

9 Positons

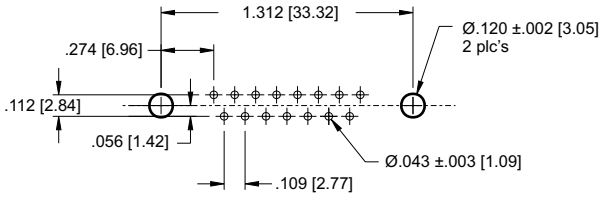

15 Positions

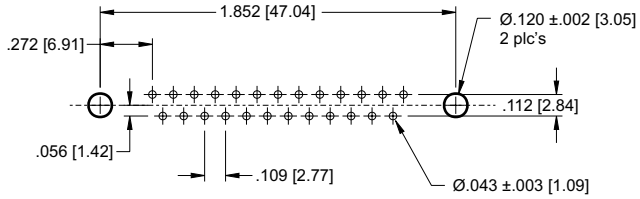

25 Positions

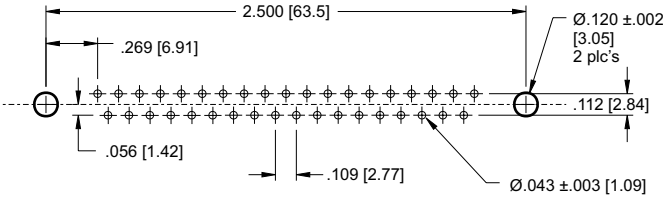

37 Positions

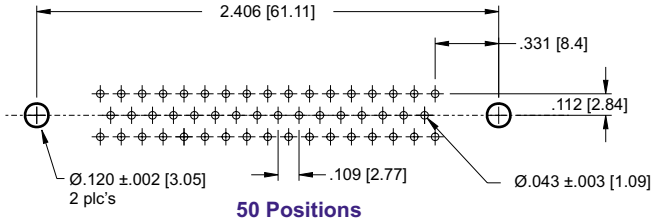

50 Positions

8000 Series D-Subminiature PCB Layouts

HIGH DENSITY STRAIGHT

	PLUG	RECEPTACLE
15 Positions	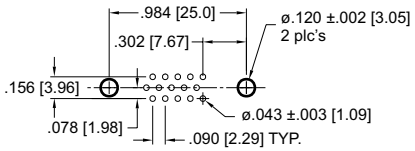	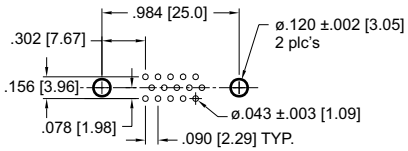
26 Positions	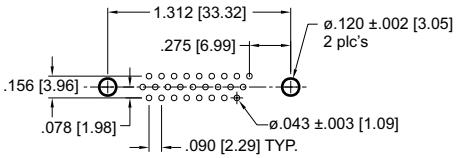	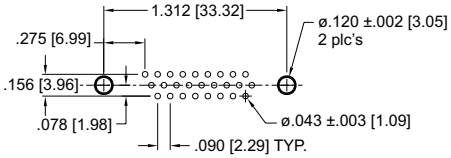
44 Positions	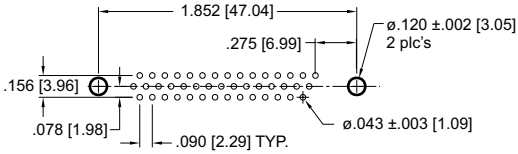	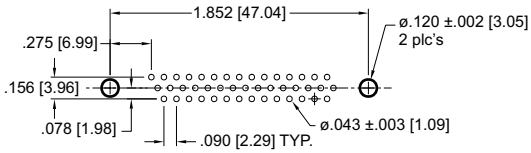
62 Position	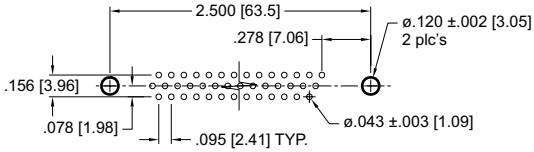	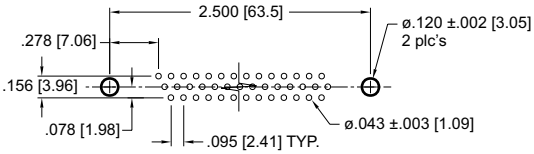

Dimensions are in Inches [mm]

All Tolerances are ±.005, Unless Otherwise Noted.

HIGH DENSITY RIGHT ANGLE

	PLUG	RECEPTACLE
15 Positions	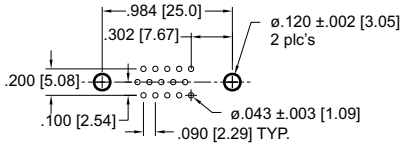	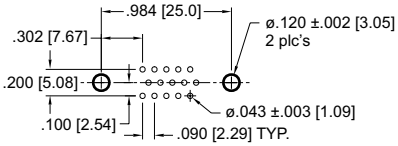
26 Positions	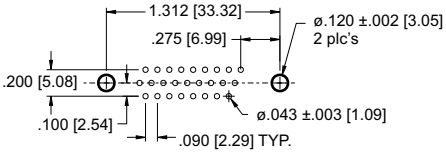	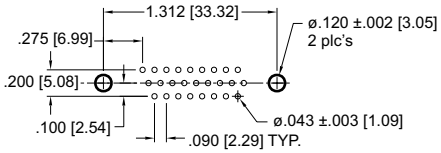
44 Positions	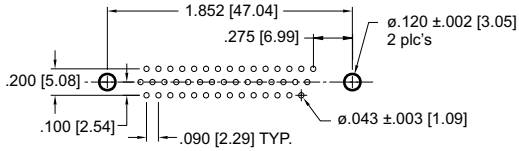	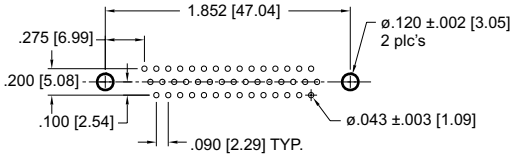
62 Position	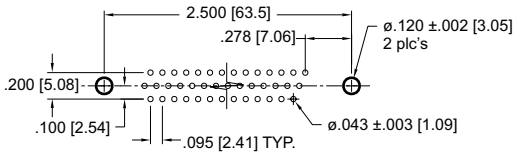	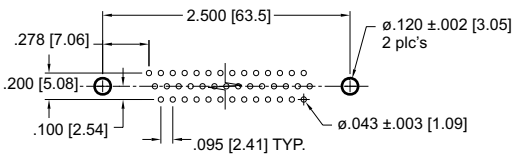

8000 Series D-Subminiature Mounting Options

Press-Fit and Plastic Body Connectors

00 = .120 dia. Thru Holes

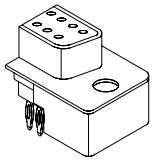

02 = #4-40 Threaded Insert

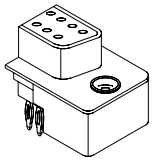

03 = #4-40 Threaded Insert with #4-40 Screw Lock

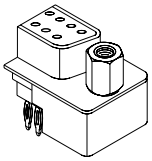

15 = #4-40 Threaded Insert with Board Lock

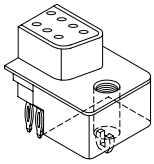

16 = #4-40 Screw Lock with Board Lock

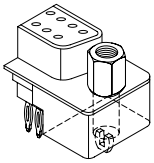

Solder, Right Angle, and High Density Connectors

01 = .120 dia. Riveted Front and Rear Shell

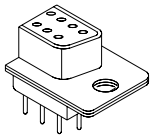

04 = Riveted #4-40 UNC Open Nuts on Rear Shell

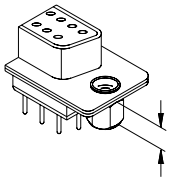

05 = Riveted #4-40 UNC Closed Nuts on Front Shell

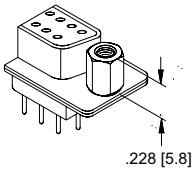

06 = Riveted #4-40 UNC Open Nuts on Front Shell

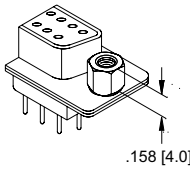

07 = Riveted #4-40 UNC Close Ground Stand-Off on Rear Shell (Stamped Contact)

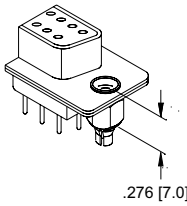

07 = Riveted #4-40 UNC Close Ground Stand-Off on Rear Shell (Machined Contact)

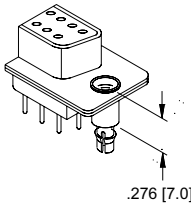

08 = Riveted Ground Hooks with #4-40 UNC Open

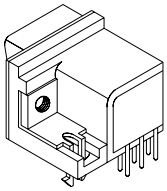

09 = Riveted Ground Tabs with #4-40 UNC Open (Stamped Contact)

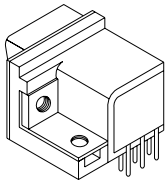

09 = Riveted Ground Tabs with #4-40 UNC Open (Machined Contact)

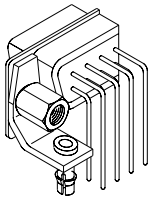

10 = Riveted Ground Hooks Pre-Loaded #4-40 UNC Hex Screws

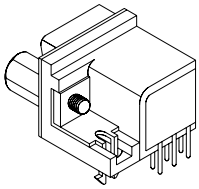

11 = Assembly Ground Hooks By #4-40 UNC Hex Screws (Stamped Contact)

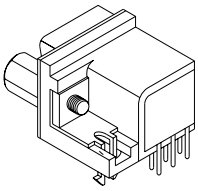

11 = Assembly Ground Hooks By #4-40 UNC Hex Screws (Machined Contact)

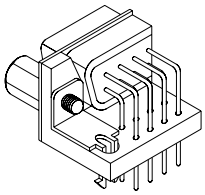

12 = Riveted #4-40 UNC Close Ground Stand-Off on Rear Shell (Stamped Contact) for High Profile Connectors

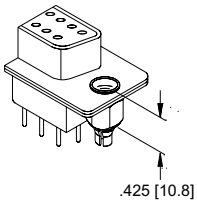

13 = Riveted #4-40 UNC Close Ground Stand-Off on Rear Shell (Stamped Contact)

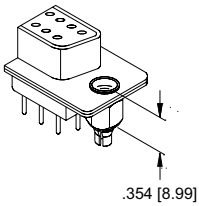

CONSULT FACTORY FOR OTHER MOUNTING STYLE OPTIONS

ELECTRONIC CONNECTOR SERVICE INC. 11880 WESTERN AVE. STANTON, CA 90680 TOLL FREE (877) ECS-CONN TEL (714) 895-6351 FAX (714) 894-1858
WWW.ECSCONN.COM

8000 Series D-Subminiature Accessories

80-H001

Set Includes:
2 #4-40 female jack screws, 2 flat washers,
2 split washers, and 2 hex nuts.

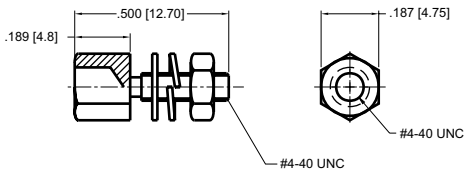

80-H002

Set Includes:
2 #4-40 female jack screws, and 2 hex nuts.

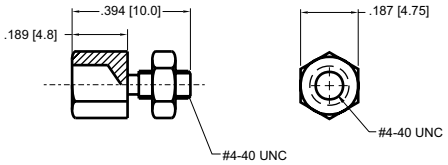

80-H003

Set Includes:
2 #4-40 screw retainer clips and 2 retainer screws

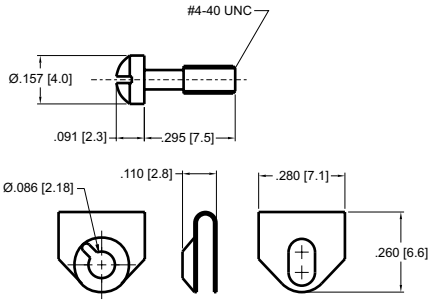

80-H004

Set Includes:
2 slide lock posts, 2 washers, 2 lock washers, 2 hex nuts

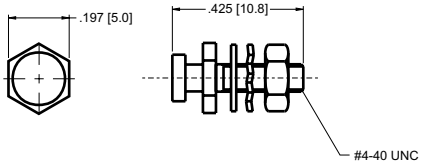

Set Includes: 2 female jack screws

Part No.	Dimension A
80-H005	.465 [11.8]
80-H006	.500 [12.7]
80-H007	.394 [10.0]
80-H008	.701 [17.8]

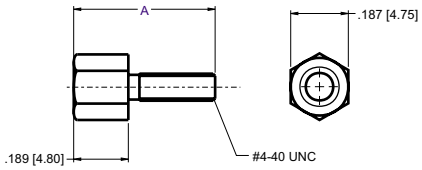

Set Includes: 2 hex nuts

Part No.	Dimension A
80-H009	.075 [1.90]
80-H010	.244 [6.20]

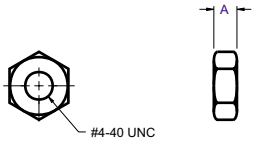

Slide Lock Assembly kit

CIRCUITS	Part No. Sliding Latch w/ Screw	Part No. Sliding Latch w/o Screw	A	B	C
9	80-H012	80-H013	1.098 [27.9]	1.398 [35.5]	0.835 [21.2]
15	80-H014	80-H015	1.406 [36.7]	1.717 [43.6]	1.157 [29.4]
25	80-H016	80-H017	1.949 [49.5]	2.264 [57.5]	1.699 [43.1]

80-H011

Set Includes: 2 slide lock posts

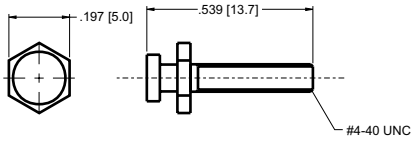

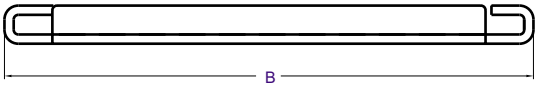

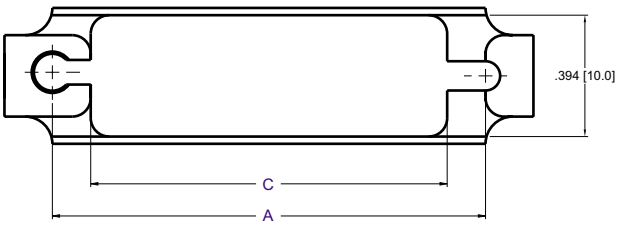

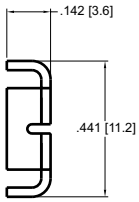

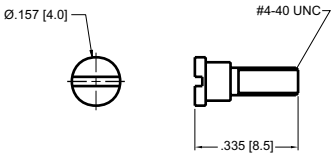

8000 Series D-Subminiature Vertical Standard Profile Press Fit

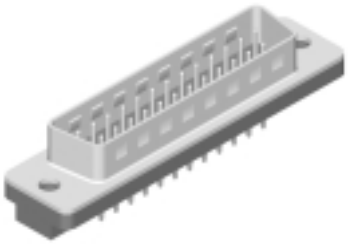

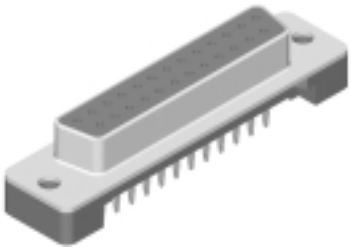

PLUG

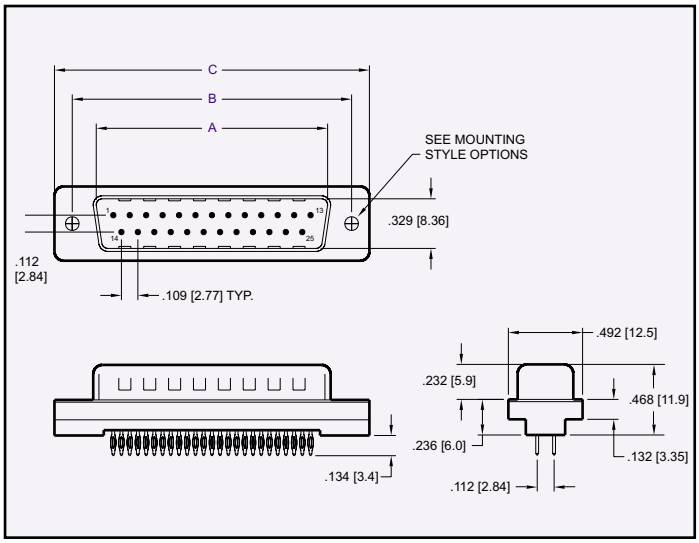

RECEPTACLE

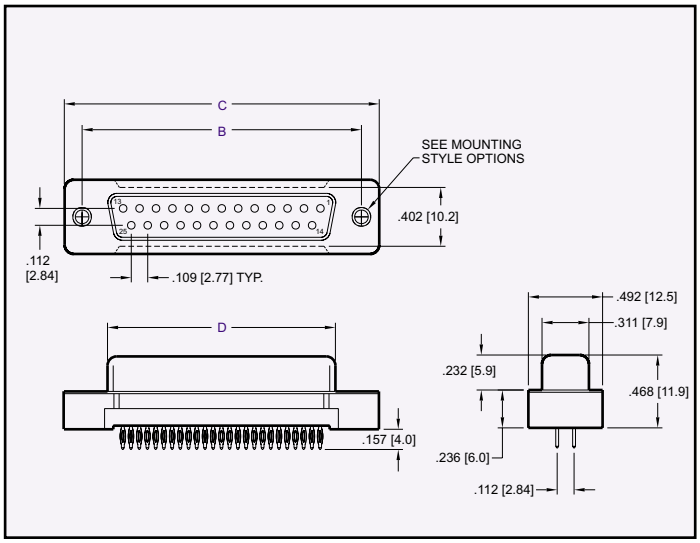

NO. OF CONTACTS	A	B	C	D
09	0.666 [16.92]	0.984 [25.00]	1.213 [30.81]	0.642 [16.33]
15	1.004 [25.50]	1.312 [33.32]	1.541 [39.14]	0.969 [24.66]
25	1.534 [38.96]	1.852 [47.04]	2.088 [53.04]	1.508 [38.38]
37	2.182 [55.42]	2.500 [63.50]	2.729 [69.32]	2.157 [54.84]

Dimensions are in inches [mm]

PART NUMBERING

80 XX — 01 X — XX X X — XX

SERIES CODE

NO. OF CONTACTS
09, 15, 25, 37

CONNECTOR TYPE
P = Plug
S = Receptacle

MOUNTING STYLE OPTIONS
See Page E-05 For Options
00 = .120 dia. Thru Holes
02 = #4-40 Threaded Insert
03 = #4-40 Threaded Insert with # 4-40 UNC Screw Lock
15 = #4-40 Threaded Insert with Board Lock
16 = #4-40 Screw Lock with Board Lock
Consult Factory for other Mounting Options

CONTACT PLATING
50µ" Nickel Underplate

Mating Area	Tail
05 = Au Flash	100µ" Tin Lead
20 = 15µ" Gold	100µ" Tin Lead
30 = 30µ" Gold	100µ" Tin Lead

SHELL PLATING
.000050 nickel underplate
1 = Tin Plating (standard)
2 = Yellow Chromate

INSULATOR COLOR
1 = Black (Standard)
2 = White
3 = Blue

8000 Series D-Subminiature
Vertical Standard Profile Solder Cup

PLUG

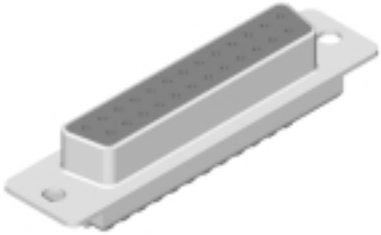

RECEPTACLE

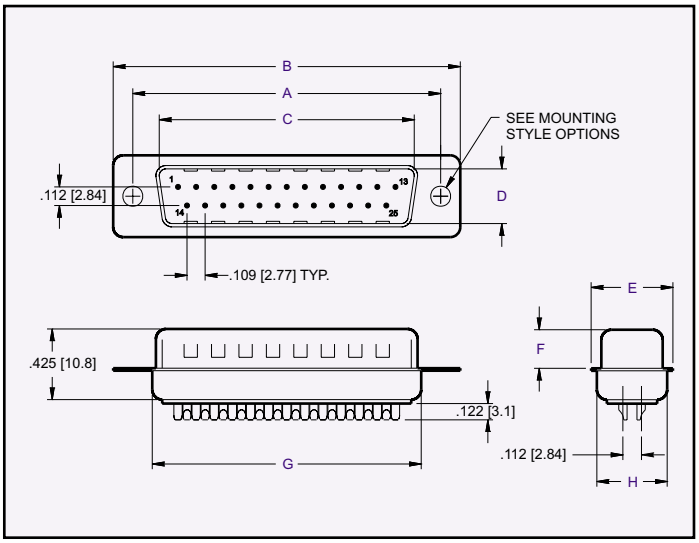

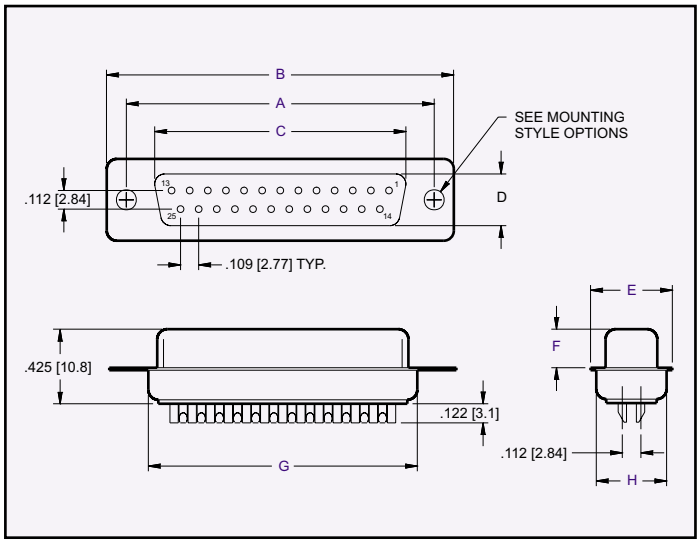

NO. OF CONTACTS CONNECTOR TYPE	A	B	C	D	E	F	G	H
09 Plug	0.984 [25.00]	1.213 [30.80]	0.666 [16.92]	0.327 [08.30]	0.492 [12.50]	0.236 [06.00]	0.760 [19.30]	0.423 [10.75]
09 Rec.	0.984 [25.00]	1.213 [30.80]	0.642 [16.30]	0.311 [07.90]	0.492 [12.50]	0.228 [05.80]	0.760 [19.30]	0.423 [10.75]
15 Plug	1.312 [33.32]	1.543 [39.20]	0.994 [25.25]	0.327 [08.30]	0.492 [12.50]	0.236 [06.00]	1.087 [27.60]	0.423 [10.75]
15 Rec.	1.312 [33.32]	1.543 [39.20]	0.969 [24.60]	0.311 [07.90]	0.492 [12.50]	0.228 [05.80]	1.087 [27.60]	0.423 [10.75]
25 Plug	1.852 [47.04]	2.091 [53.10]	1.534 [38.96]	0.327 [08.30]	0.492 [12.50]	0.236 [06.00]	1.618 [41.10]	0.423 [10.75]
25 Rec.	1.852 [47.04]	2.091 [53.10]	1.508 [38.30]	0.311 [07.90]	0.492 [12.50]	0.228 [05.80]	1.618 [41.10]	0.423 [10.75]
37 Plug	2.500 [63.50]	2.732 [69.40]	2.182 [55.42]	0.327 [08.30]	0.492 [12.50]	0.236 [06.00]	2.256 [57.30]	0.423 [10.75]
37 Rec.	2.500 [63.50]	2.732 [69.40]	2.157 [54.80]	0.311 [07.90]	0.492 [12.50]	0.228 [05.80]	2.256 [57.30]	0.423 [10.75]
50 Plug	2.402 [61.00]	2.638 [67.00]	2.079 [52.81]	0.473 [11.10]	0.602 [15.30]	0.236 [06.00]	2.169 [55.10]	0.526 [13.35]
50 Rec.	2.402 [61.00]	2.638 [67.00]	2.055 [52.20]	0.429 [10.90]	0.602 [15.30]	0.236 [06.00]	2.169 [55.10]	0.526 [13.35]

Dimensions are in inches [mm]

PART NUMBERING

80 XX — 02 X — XX X X — XX

SERIES CODE

NO. OF CONTACTS
09, 15, 25, 37, 50

CONNECTOR TYPE
P = Plug
S = Receptacle

MOUNTING STYLE OPTIONS
See Page E-05 For Options
01 = .120 Riveted Front and Rear Shell
04 = Riveted #4-40 UNC Open Nut on Rear Shell
05 = Riveted #4-40 UNC Closed Nut on Front Shell
06 = Riveted #4-40 UNC Open Nut on Front Shell
Consult Factory for other Mounting Options

CONTACT PLATING
50µ" Nickel Underplate

Mating Area	Tail
05 = Au Flash	100µ" Tin Lead
20 = 15µ" Gold	100µ" Tin Lead
30 = 30µ" Gold	100µ" Tin Lead

SHELL PLATING
50µ" Nickel Underplate
1 = Tin Plating (standard)
2 = Yellow Chromate

INSULATOR COLOR
1 = Black (Standard)
2 = White
3 = Blue

8000 Series D-Subminiature Straight PCB Dip Solder

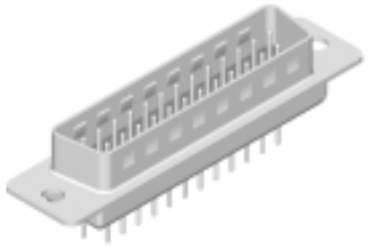

PLUG

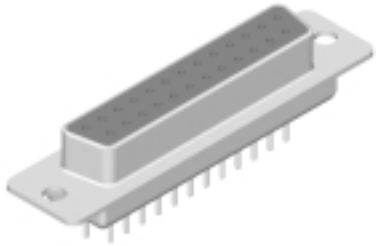

RECEPTACLE

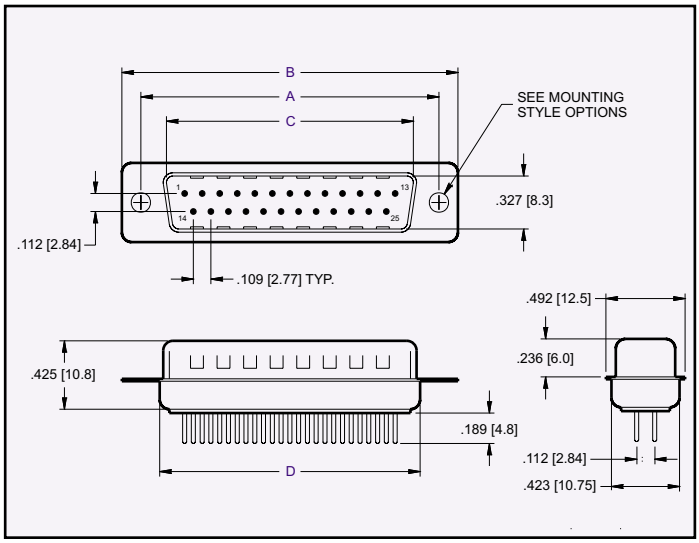

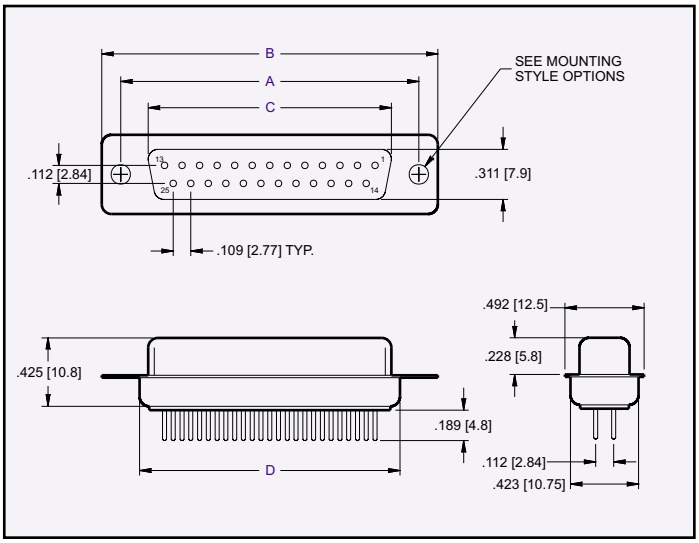

PLUG

CONTACTS	A	B	C	D
09	0.984 [25.00]	1.213 [30.80]	0.666 [16.92]	0.756 [19.20]
15	1.312 [33.32]	1.543 [39.20]	0.994 [25.25]	1.091 [27.70]
25	1.852 [47.04]	2.091 [53.10]	1.534 [38.96]	1.618 [41.10]
37	2.500 [63.50]	2.732 [69.40]	2.182 [55.42]	2.256 [57.30]

RECEPTACLE

CONTACTS	A	B	C	D
09	0.984 [25.00]	1.213 [30.80]	0.642 [16.30]	0.756 [19.20]
15	1.312 [33.32]	1.543 [39.20]	0.969 [24.60]	1.091 [27.70]
25	1.852 [47.04]	2.091 [53.10]	1.508 [38.30]	1.618 [41.10]
37	2.500 [63.50]	2.732 [69.40]	2.157 [54.80]	2.256 [57.30]

Dimensions are in inches [mm]

PART NUMBERING

80 XX — 03 X — XX X X — XX

SERIES CODE

NO. OF CONTACTS
09, 15, 25, 37

CONNECTOR TYPE
P = Plug
S = Receptacle

MOUNTING STYLE OPTIONS
See Page E-05 For Options
01 = .120 Riveted Front and Rear Shell
04 = Riveted #4-40 UNC Open Nut on Rear Shell
05 = Riveted #4-40 UNC Closed Nut on Front Shell
06 = Riveted #4-40 UNC Open Nut on Front Shell
07 = Riveted #4-40 UNC Close Ground Stand Off on Rear Shell
Consult Factory for other Mounting Options

CONTACT PLATING
50µ" Nickel Underplate

Mating Area	Tail
05 = Au Flash	100µ" Tin Lead
20 = 15µ" Gold	100µ" Tin Lead
30 = 30µ" Gold	100µ" Tin Lead

SHELL PLATING
50µ" Nickel Underplate
1 = Tin Plating (standard)
2 = Yellow Chromate

INSULATOR COLOR
1 = Black (Standard)
2 = White
3 = Blue

ELECTRONIC CONNECTOR SERVICE INC. 11880 WESTERN AVE. STANTON, CA 90680 TOLL FREE (877) ECS-CONN TEL (714) 895-6351 FAX (714) 894-1858
WWW.ECSCONN.COM

8000 Series D-Subminiature
Straight Dip Solder Without Rear Shell

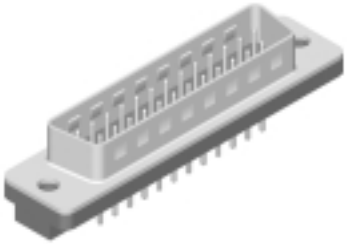

PLUG

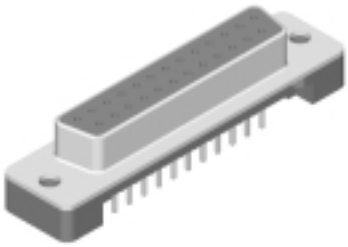

RECEPTACLE

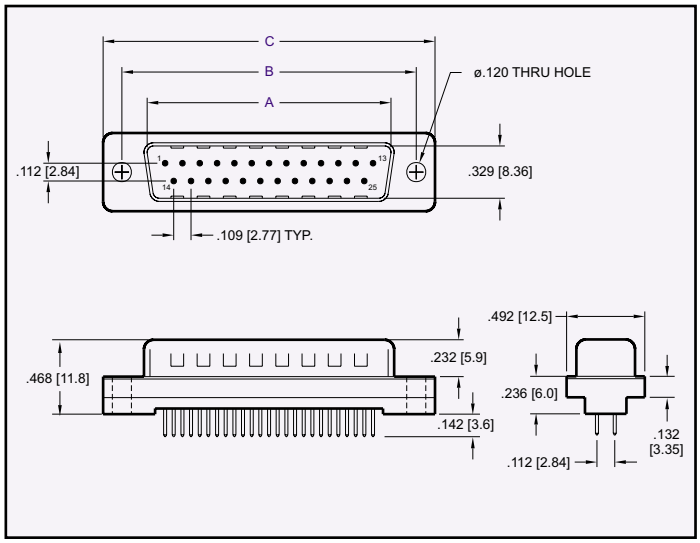

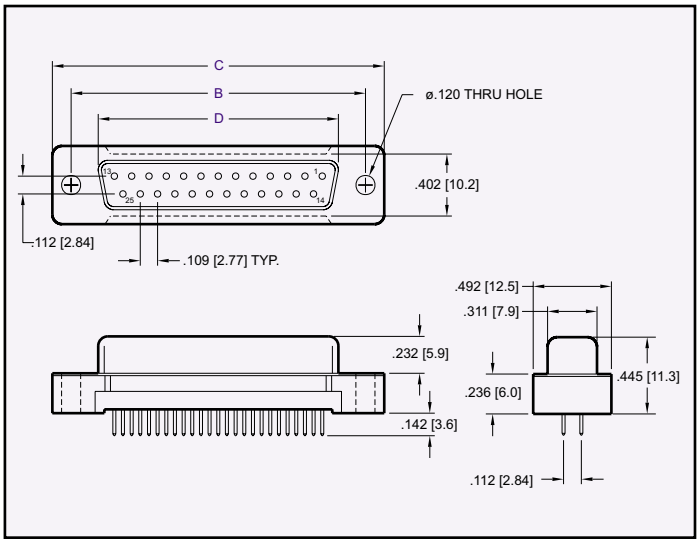

NO. OF CONTACTS	A	B	C	D
09	0.666 [16.92]	0.984 [25.00]	1.213 [30.81]	0.642 [16.33]
15	1.004 [25.50]	1.312 [33.32]	1.541 [39.14]	0.969 [24.66]
25	1.534 [38.96]	1.852 [47.04]	2.088 [53.04]	1.508 [38.38]
37	2.182 [55.42]	2.500 [63.50]	2.729 [69.32]	2.157 [54.84]

Dimensions are in inches [mm]

PART NUMBERING

80 XX — 11 X — XX X X — XX

SERIES CODE

NO. OF CONTACTS
09, 15, 25, 37

CONNECTOR TYPE
P = Plug
S = Receptacle

MOUNTING STYLE OPTIONS
See Page E-05 For Options
00 = .120 dia. Thru Holes
02 = #4-40 Threaded Insert
03 = #4-40 Threaded Insert with # 4-40 UNC Screw Lock
15 = #4-40 Threaded Insert with Board Lock
16 = #4-40 Screw Lock with Board Lock
Consult Factory for other Mounting Options

CONTACT PLATING
50µ" Nickel Underplate

Mating Area	Tail
05 = Au Flash	100µ" Tin Lead
20 = 15µ" Gold	100µ" Tin Lead
30 = 30µ" Gold	100µ" Tin Lead

SHELL PLATING
50µ" Nickel Underplate
1 = Tin Plating (standard)
2 = Yellow Chromate

INSULATOR COLOR
1 = Black (Standard)
2 = White
3 = Blue

8000 Series D-Subminiature High Profile Straight Dip Solder

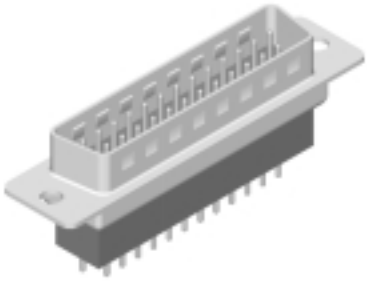

PLUG

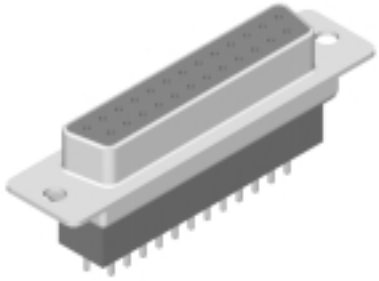

RECEPTACLE

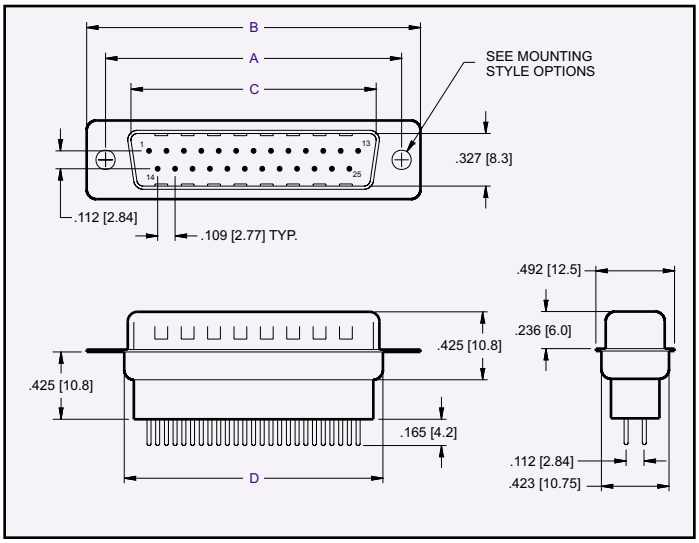

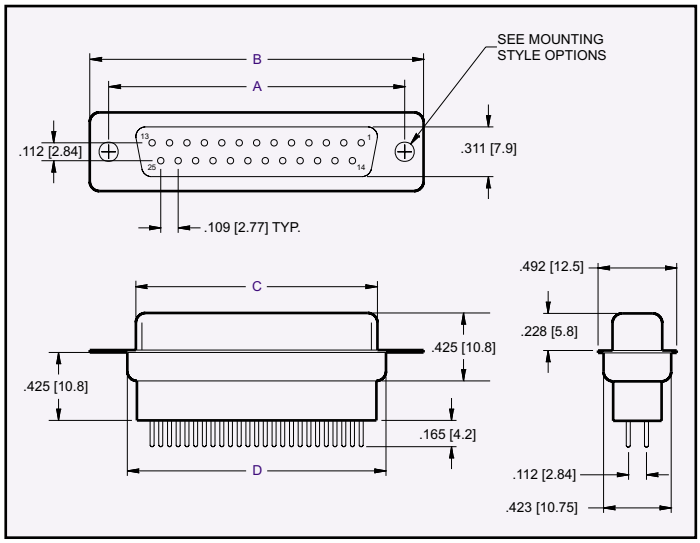

PLUG

CONTACTS	A	B	C	D
09	0.984 [25.00]	1.213 [30.80]	0.666 [16.92]	0.756 [19.20]
15	1.312 [33.32]	1.543 [39.20]	0.994 [25.25]	1.091 [27.70]
25	1.852 [47.04]	2.091 [53.10]	1.534 [38.96]	1.618 [41.10]
37	2.500 [63.50]	2.732 [69.40]	2.182 [55.42]	2.256 [57.30]

RECEPTACLE

CONTACTS	A	B	C	D
09	0.984 [25.00]	1.213 [30.80]	0.642 [16.30]	0.756 [19.20]
15	1.312 [33.32]	1.543 [39.20]	0.969 [24.60]	1.091 [27.70]
25	1.852 [47.04]	2.091 [53.10]	1.508 [38.30]	1.618 [41.10]
37	2.500 [63.50]	2.732 [69.40]	2.157 [54.80]	2.256 [57.30]

Dimensions are in inches [mm]

PART NUMBERING

80 XX — 04 X — XX X X — XX

SERIES CODE

NO. OF CONTACTS
09, 15, 25, 37

CONNECTOR TYPE
P = Plug
S = Receptacle

MOUNTING STYLE OPTIONS
See Page E-05 For Options
01 = .120 Riveted Front and Rear Shell
04 = Riveted #4-40 UNC Open Nut on Rear Shell
05 = Riveted #4-40 UNC Closed Nut on Front Shell
06 = Riveted #4-40 UNC Open Nut on Front Shell
12 = Riveted #4-40 UNC Close Ground Stand Off an Rear Shell
Consult Factory for other Mounting Options

CONTACT PLATING
50µ" Nickel Underplate

Mating Area	Tail
05 = Au Flash	100µ" Tin Lead
20 = 15µ" Gold	100µ" Tin Lead
30 = 30µ" Gold	100µ" Tin Lead

SHELL PLATING
50µ" Nickel Underplate
1 = Tin Plating (standard)
2 = Yellow Chromate

INSULATOR COLOR
1 = Black (Standard)

8000 Series D-Subminiature
Low Profile Straight Dip Solder

PLUG

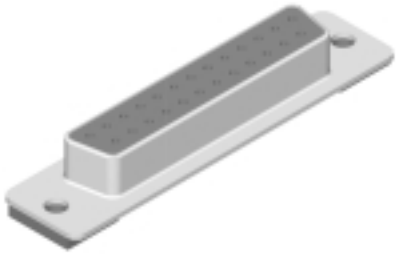

RECEPTACLE

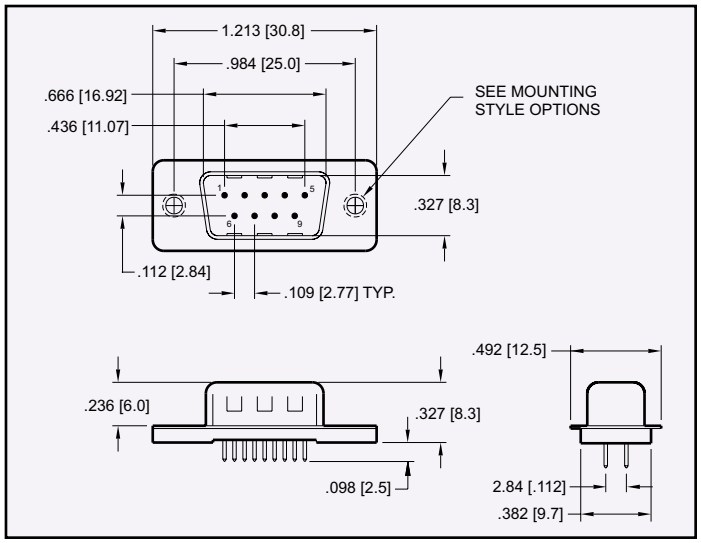

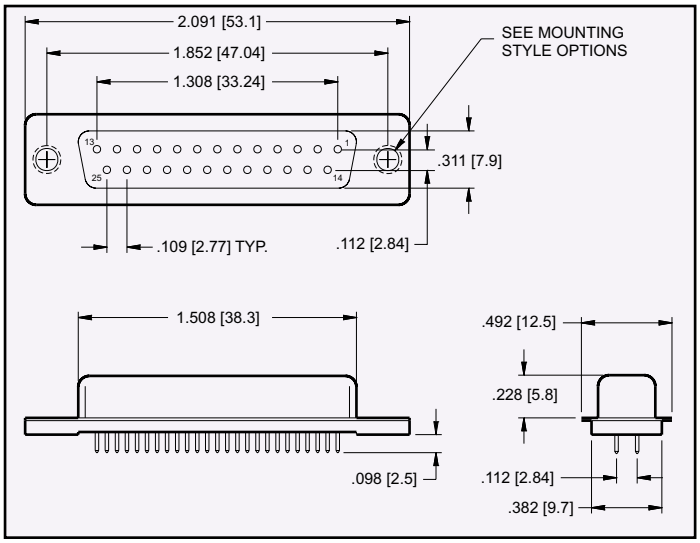

Dimensions are in inches [mm]

PART NUMBERING

80 XX — 05 X — XX X X — XX

SERIES CODE
Low Profile Straight Dip Solder

NO. OF CONTACTS
09 = Plug
25 = Receptacle

CONNECTOR TYPE
P = Plug
S = Receptacle

MOUNTING STYLE OPTIONS
See Page E-05 For Options
00 = .120 dia. Thru Holes
02 = #4-40 Threaded Insert
Consult Factory for other Mounting Options

CONTACT PLATING
50µ" Nickel Underplate

Mating Area	Tail
05 = Au Flash	100µ" Tin Lead
20 = 15µ" Gold	100µ" Tin Lead
30 = 30µ" Gold	100µ" Tin Lead

SHELL PLATING
50µ" Nickel Underplate
1 = Tin Plating (standard)

INSULATOR COLOR
1 = Black (Standard)

8000 Series D-Subminiature High Density Straight Dip Solder

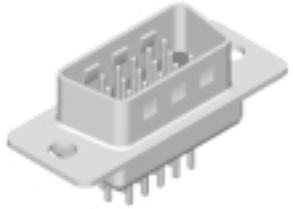

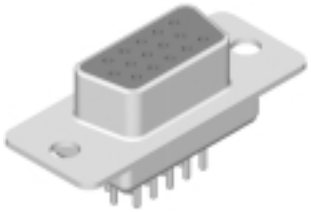

PLUG

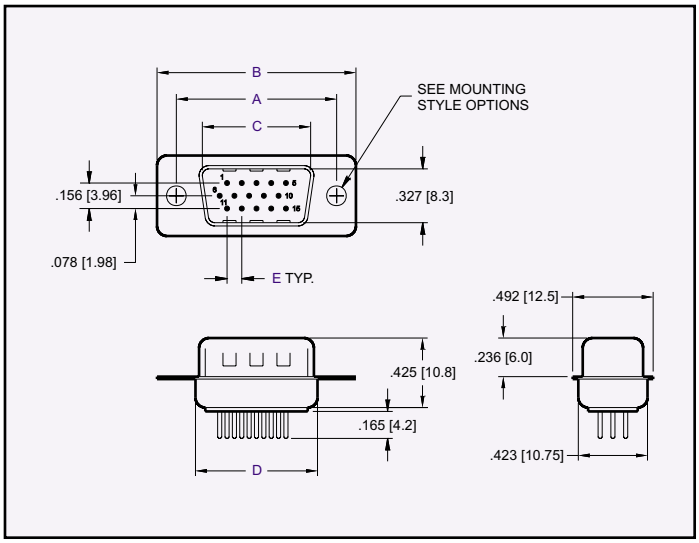

RECEPTACLE

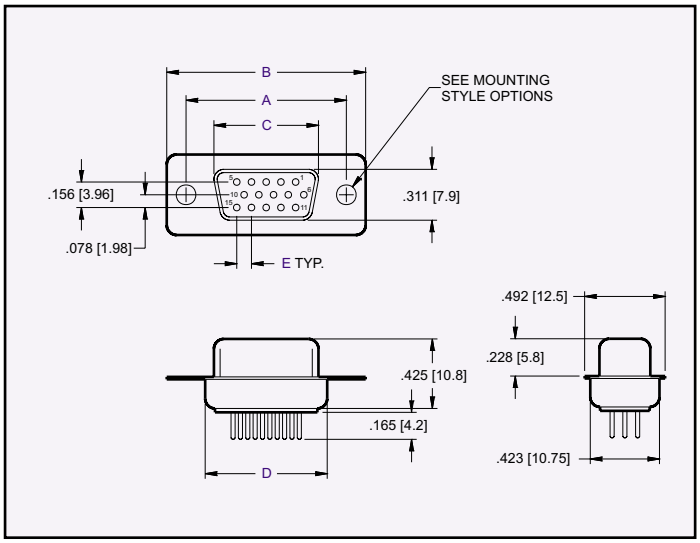

NO. OF CONTACTS CONNECTOR TYPE	A	B	C	D	E
15 Plug	0.984 [25.00]	1.213 [30.80]	0.666 [16.92]	0.756 [19.20]	0.090 [02.29]
15 Rec.	0.984 [25.00]	1.213 [30.80]	0.642 [16.30]	0.756 [19.20]	0.090 [02.29]
26 Plug	1.312 [33.32]	1.543 [39.20]	0.994 [25.25]	1.091 [27.70]	0.090 [02.29]
26 Rec.	1.312 [33.32]	1.543 [39.20]	0.969 [24.60]	1.091 [27.70]	0.090 [02.29]
44 Plug	1.852 [47.04]	2.091 [53.10]	1.534 [38.96]	1.618 [41.10]	0.090 [02.29]
44 Rec.	1.852 [47.04]	2.091 [53.10]	1.508 [38.30]	1.618 [41.10]	0.090 [02.29]
62 Plug	2.500 [63.50]	2.732 [69.40]	2.182 [55.42]	2.256 [57.30]	0.095 [02.41]
62 Rec.	2.500 [63.50]	2.732 [69.40]	2.157 [54.80]	2.256 [57.30]	0.095 [02.41]

Dimensions are in inches [mm]

PART NUMBERING

80 XX — 06 X — XX X X — XX

SERIES CODE

NO. OF CONTACTS
15, 26, 44, 62

CONNECTOR TYPE
P = Plug
S = Receptacle

MOUNTING STYLE OPTIONS
See Page E-05 For Options
01 = .120 Riveted Front and Rear Shell
04 = Riveted #4-40 UNC Open Nut on Rear Shell
05 = Riveted #4-40 UNC Closed Nut on Front Shell
06 = Riveted #4-40 UNC Open Nut on Front Shell
07 = Riveted #4-40 UNC Closed Ground Stand Off on Rear Shell
Consult Factory for other Mounting Options

CONTACT PLATING
50µ" Nickel Underplate

Mating Area	Tail
05 = Au Flash	100µ" Tin Lead
20 = 15µ" Gold	100µ" Tin Lead
30 = 30µ" Gold	100µ" Tin Lead

SHELL PLATING
50µ" Nickel Underplate
1 = Tin Plating (standard)
2 = Yellow Chromate

INSULATOR COLOR
1 = Black (Standard)
2 = White
3 = Blue

ELECTRONIC CONNECTOR SERVICE INC. 11880 WESTERN AVE. STANTON, CA 90680 TOLL FREE (877) ECS-CONN TEL (714) 895-6351 FAX (714) 894-1858
WWW.ECSCONN.COM

8000 Series D-Subminiature High Density Solder Cup

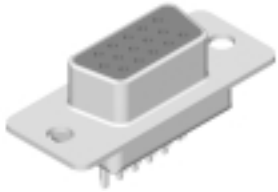

PLUG

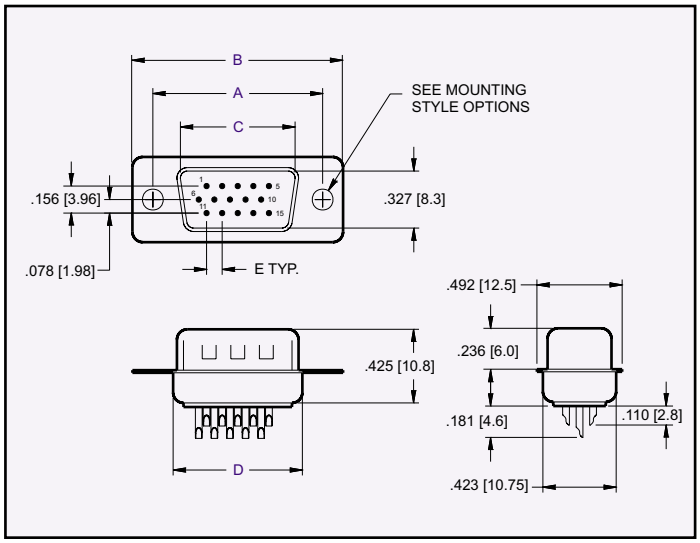

RECEPTACLE

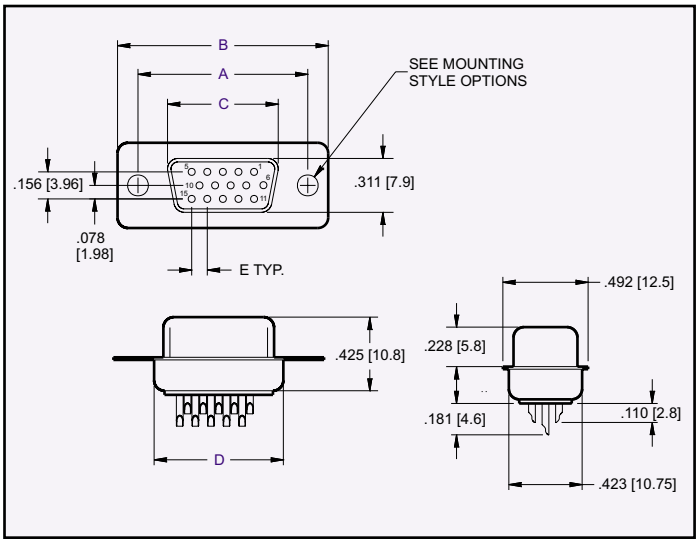

NO. OF CONTACTS CONNECTOR TYPE	A	B	C	D	E
15 Plug	0.984 [25.00]	1.213 [30.80]	0.666 [16.92]	0.756 [19.20]	0.090 [02.29]
15 Rec.	0.984 [25.00]	1.213 [30.80]	0.642 [16.30]	0.756 [19.20]	0.090 [02.29]
26 Plug	1.312 [33.32]	1.543 [39.20]	0.994 [25.25]	1.091 [27.70]	0.090 [02.29]
26 Rec.	1.312 [33.32]	1.543 [39.20]	0.969 [24.60]	1.091 [27.70]	0.090 [02.29]
44 Plug	1.852 [47.04]	2.091 [53.10]	1.534 [38.96]	1.618 [41.10]	0.090 [02.29]
44 Rec.	1.852 [47.04]	2.091 [53.10]	1.508 [38.30]	1.618 [41.10]	0.090 [02.29]
62 Plug	2.500 [63.50]	2.732 [69.40]	2.182 [55.42]	2.256 [57.30]	0.095 [02.41]
62 Rec.	2.500 [63.50]	2.732 [69.40]	2.157 [54.80]	2.256 [57.30]	0.095 [02.41]

Dimensions are in inches [mm]

PART NUMBERING

80 XX — 07 X — XX X X — XX

SERIES CODE

NO. OF CONTACTS
15, 26, 44, 62

CONNECTOR TYPE
P = Plug
S = Receptacle

MOUNTING STYLE OPTIONS
See Page E-05 For Options
01 = .120 Riveted Front and Rear Shell
04 = Riveted #4-40 UNC Open Nut on Rear Shell
05 = Riveted #4-40 UNC Closed Nut on Front Shell
06 = Riveted #4-40 UNC Open Nut on Front Shell
07 = Riveted #4-40 UNC Closed Ground Stand Off on Rear Shell
Consult Factory for other Mounting Options

CONTACT PLATING
50µ" Nickel Underplate

Mating Area	Tail
05 = Au Flash	100µ" Tin Lead
20 = 15µ" Gold	100µ" Tin Lead
30 = 30µ" Gold	100µ" Tin Lead

SHELL PLATING
50µ" Nickel Underplate
1 = Tin Plating (standard)
2 = Yellow Chromate

INSULATOR COLOR
1 = Black (Standard)
2 = White
3 = Blue

ELECTRONIC CONNECTOR SERVICE INC. 11880 WESTERN AVE. STANTON, CA 90680 TOLL FREE (877) ECS-CONN TEL (714) 895-6351 FAX (714) 894-1858
WWW.ECSCONN.COM

8000 Series D-Subminiature
High Density, High Profile Straight Dip Solder

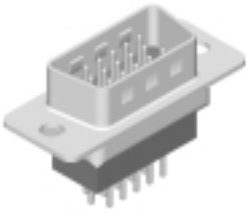

PLUG

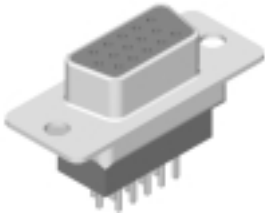

RECEPTACLE

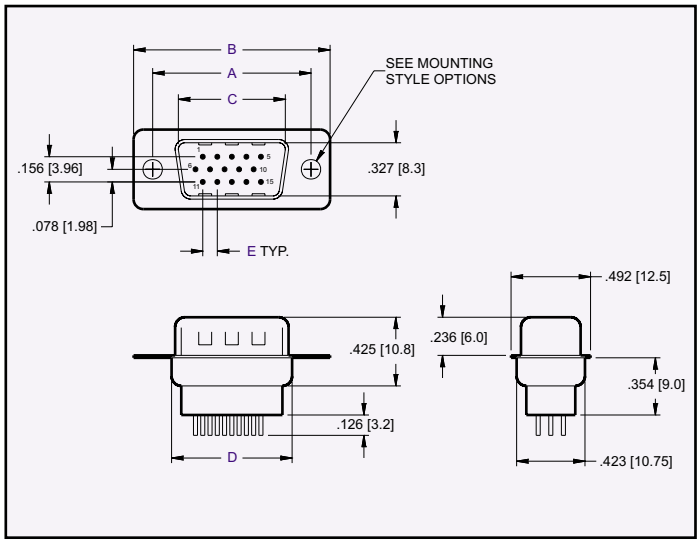

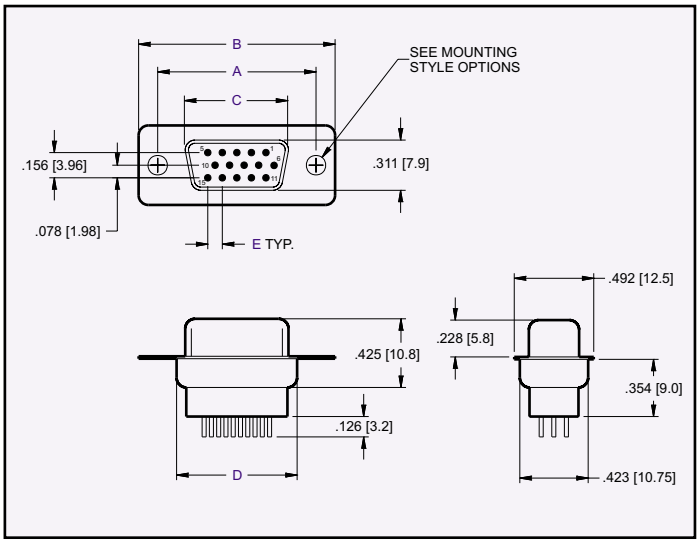

NO. OF CONTACTS CONNECTOR TYPE	A	B	C	D	E
15 Plug	0.984 [25.00]	1.213 [30.80]	0.666 [16.92]	0.756 [19.20]	0.090 [02.29]
15 Rec.	0.984 [25.00]	1.213 [30.80]	0.642 [16.30]	0.756 [19.20]	0.090 [02.29]
26 Plug	1.312 [33.32]	1.543 [39.20]	0.994 [25.25]	1.091 [27.70]	0.090 [02.29]
26 Rec.	1.312 [33.32]	1.543 [39.20]	0.969 [24.60]	1.091 [27.70]	0.090 [02.29]
44 Plug	1.852 [47.04]	2.091 [53.10]	1.534 [38.96]	1.618 [41.10]	0.090 [02.29]
44 Rec.	1.852 [47.04]	2.091 [53.10]	1.508 [38.30]	1.618 [41.10]	0.090 [02.29]
62 Plug	2.500 [63.50]	2.732 [69.40]	2.182 [55.42]	2.256 [57.30]	0.095 [02.41]
62 Rec.	2.500 [63.50]	2.732 [69.40]	2.157 [54.80]	2.256 [57.30]	0.095 [02.41]

Dimensions are in inches [mm]

PART NUMBERING

80 XX — 08 X — XX X X — XX

SERIES CODE

NO. OF CONTACTS
15, 26, 44, 62

CONNECTOR TYPE
P = Plug
S = Receptacle

MOUNTING STYLE OPTIONS
See Page E-05 For Options
01 = .120 Riveted Front and Rear Shell
04 = Riveted #4-40 UNC Open Nut on Rear Shell
05 = Riveted #4-40 UNC Closed Nut on Front Shell
06 = Riveted #4-40 UNC Open Nut on Front Shell
12 = Riveted #4-40 UNC Closed Ground Stand Off on Rear Shell
Consult Factory for other Mounting Options

CONTACT PLATING
50µ" Nickel Underplate

Mating Area	Tail
05 = Au Flash	100µ" Tin Lead
20 = 15µ" Gold	100µ" Tin Lead
30 = 30µ" Gold	100µ" Tin Lead

SHELL PLATING
50µ" Nickel Underplate
1 = Tin Plating (standard)
2 = Yellow Chromate

INSULATOR COLOR
1 = Black

8000 Series D-Subminiature

Standard Profile Machined Contacts Solder Cup

PLUG

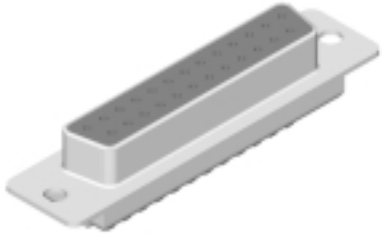

RECEPTACLE

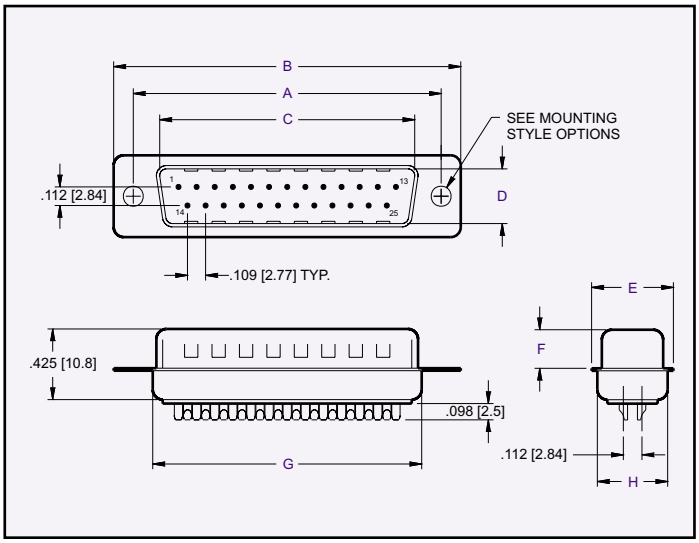

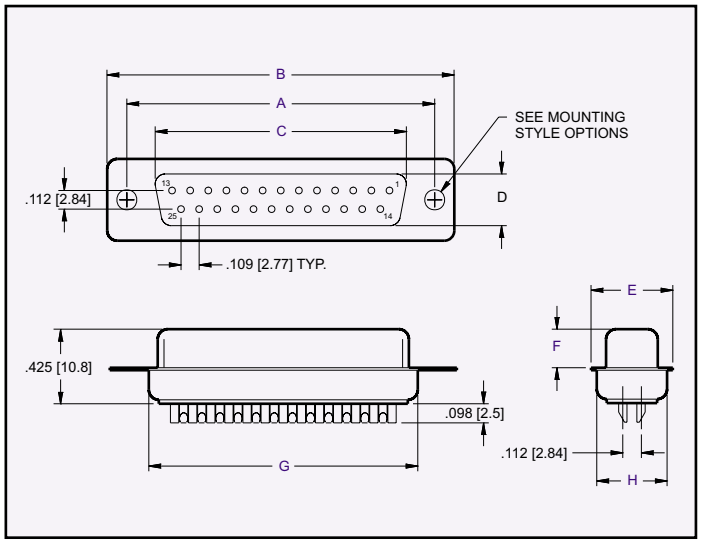

NO. OF CONTACTS CONNECTOR TYPE	A	B	C	D	E	F	G	H
09 Plug	0.984 [25.00]	1.213 [30.80]	0.666 [16.92]	0.327 [08.30]	0.492 [12.50]	0.236 [06.00]	0.760 [19.30]	0.423 [10.75]
09 Rec.	0.984 [25.00]	1.213 [30.80]	0.642 [16.30]	0.311 [07.90]	0.492 [12.50]	0.228 [05.80]	0.760 [19.30]	0.423 [10.75]
15 Plug	1.312 [33.32]	1.543 [39.20]	0.994 [25.25]	0.327 [08.30]	0.492 [12.50]	0.236 [06.00]	1.087 [27.60]	0.423 [10.75]
15 Rec.	1.312 [33.32]	1.543 [39.20]	0.969 [24.60]	0.311 [07.90]	0.492 [12.50]	0.228 [05.80]	1.087 [27.60]	0.423 [10.75]
25 Plug	1.852 [47.04]	2.091 [53.10]	1.534 [38.96]	0.327 [08.30]	0.492 [12.50]	0.236 [06.00]	1.618 [41.10]	0.423 [10.75]
25 Rec.	1.852 [47.04]	2.091 [53.10]	1.508 [38.30]	0.311 [07.90]	0.492 [12.50]	0.228 [05.80]	1.618 [41.10]	0.423 [10.75]
37 Plug	2.500 [63.50]	2.732 [69.40]	2.182 [55.42]	0.327 [08.30]	0.492 [12.50]	0.236 [06.00]	2.256 [57.30]	0.423 [10.75]
37 Rec.	2.500 [63.50]	2.732 [69.40]	2.157 [54.80]	0.311 [07.90]	0.492 [12.50]	0.228 [05.80]	2.256 [57.30]	0.423 [10.75]
50 Plug	2.402 [61.00]	2.638 [67.00]	2.079 [52.81]	0.473 [11.10]	0.602 [15.30]	0.236 [06.00]	2.169 [55.10]	0.526 [13.35]
50 Rec.	2.402 [61.00]	2.638 [67.00]	2.055 [52.20]	0.429 [10.90]	0.602 [15.30]	0.236 [06.00]	2.169 [55.10]	0.526 [13.35]

Dimensions are in inches [mm]

PART NUMBERING

80 XX — 09 X — XX X X — XX

SERIES CODE

NO. OF CONTACTS
09, 15, 25, 37, 50

CONNECTOR TYPE
P = Plug
S = Receptacle

MOUNTING STYLE OPTIONS
See Page E-05 For Options
01 = .120 Riveted Front and Rear Shell
04 = Riveted #4-40 UNC Open Nut on Rear Shell
05 = Riveted #4-40 UNC Closed Nut on Front Shell
06 = Riveted #4-40 UNC Open Nut on Front Shell
Consult Factory for other Mounting Options

INSULATOR COLOR
1 = Black (Standard)
2 = White

SHELL PLATING
50µ" Nickel Underplate
1 = Tin Plating (standard)
2 = Yellow Chromate

CONTACT PLATING
50µ" Nickel Underplate

Mating Area	Tail
03 = Gold Flash	Gold Flash
85 = 15µ" Gold	15µ" Gold
90 = 30µ" Gold	30µ" Gold

8000 Series D-Subminiature

Straight PCB Solder Tail with Machined Contacts

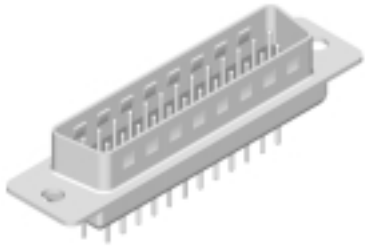

PLUG

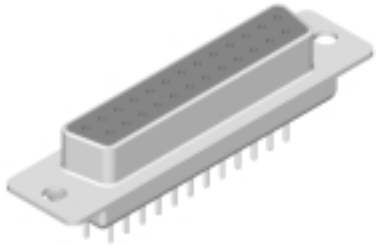

RECEPTACLE

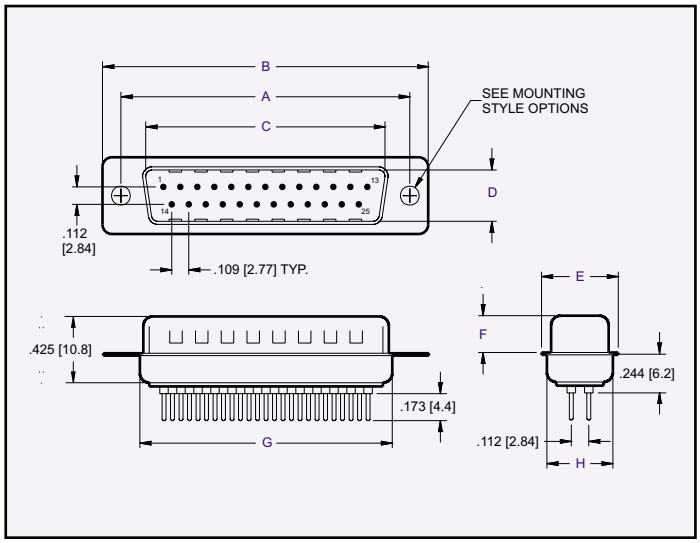

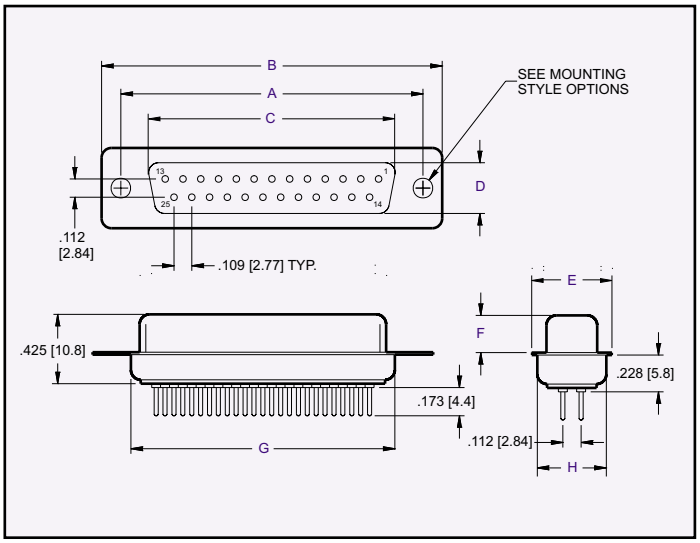

NO. OF CONTACTS CONNECTOR TYPE	A	B	C	D	E	F	G	H
09 Plug	0.984 [25.00]	1.213 [30.80]	0.666 [16.92]	0.327 [08.30]	0.492 [12.50]	0.236 [06.00]	0.760 [19.30]	0.423 [10.75]
09 Rec.	0.984 [25.00]	1.213 [30.80]	0.642 [16.30]	0.311 [07.90]	0.492 [12.50]	0.228 [05.80]	0.760 [19.30]	0.423 [10.75]
15 Plug	1.312 [33.32]	1.543 [39.20]	0.994 [25.25]	0.327 [08.30]	0.492 [12.50]	0.236 [06.00]	1.087 [27.60]	0.423 [10.75]
15 Rec.	1.312 [33.32]	1.543 [39.20]	0.969 [24.60]	0.311 [07.90]	0.492 [12.50]	0.228 [05.80]	1.087 [27.60]	0.423 [10.75]
25 Plug	1.852 [47.04]	2.091 [53.10]	1.534 [38.96]	0.327 [08.30]	0.492 [12.50]	0.236 [06.00]	1.618 [41.10]	0.423 [10.75]
25 Rec.	1.852 [47.04]	2.091 [53.10]	1.508 [38.30]	0.311 [07.90]	0.492 [12.50]	0.228 [05.80]	1.618 [41.10]	0.423 [10.75]
37 Plug	2.500 [63.50]	2.732 [69.40]	2.182 [55.42]	0.327 [08.30]	0.492 [12.50]	0.236 [06.00]	2.256 [57.30]	0.423 [10.75]
37 Rec.	2.500 [63.50]	2.732 [69.40]	2.157 [54.80]	0.311 [07.90]	0.492 [12.50]	0.228 [05.80]	2.256 [57.30]	0.423 [10.75]
50 Plug	2.402 [61.00]	2.638 [67.00]	2.079 [52.81]	0.473 [11.10]	0.602 [15.30]	0.236 [06.00]	2.169 [55.10]	0.526 [13.35]
50 Rec.	2.402 [61.00]	2.638 [67.00]	2.055 [52.20]	0.429 [10.90]	0.602 [15.30]	0.236 [06.00]	2.169 [55.10]	0.526 [13.35]

Dimensions are in inches [mm]

PART NUMBERING

80 XX — 10 X — XX X X — XX

SERIES CODE

NO. OF CONTACTS
09, 15, 25, 37, 50

CONNECTOR TYPE
P = Plug
S = Receptacle

MOUNTING STYLE OPTIONS
See Page E-05 For Options
01 = .120 Riveted Front and Rear Shell
04 = Riveted #4-40 UNC Open Nut on Rear Shell
05 = Riveted #4-40 UNC Closed Nut on Front Shell
06 = Riveted #4-40 UNC Open Nut on Front Shell
07 = Riveted #4-40 UNC Closed Ground Stand Off on Rear Shell
Consult Factory for other Mounting Options

CONTACT PLATING
50µ" Nickel Underplate

Mating Area	Tail
03 = Gold Flash	Gold Flash
85 = 15µ" Gold	15µ" Gold
90 = 30µ" Gold	30µ" Gold

SHELL PLATING
50µ" Nickel Underplate
1 = Tin Plating (standard)
2 = Yellow Chromate

INSULATOR COLOR
1 = Black
2 = White

ELECTRONIC CONNECTOR SERVICE INC. 11880 WESTERN AVE. STANTON, CA 90680 TOLL FREE (877) ECS-CONN TEL (714) 895-6351 FAX (714) 894-1858
WWW.ECSCONN.COM

8000 Series D-Subminiature .126 Right Angle Surface Mount

PLUG

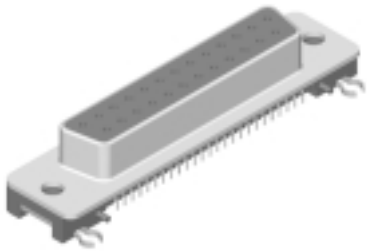

RECEPTACLE

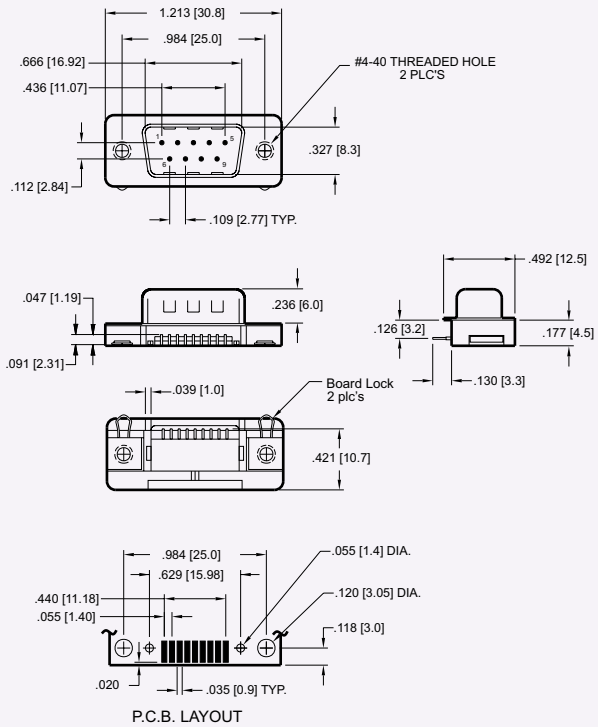

P.C.B. LAYOUT

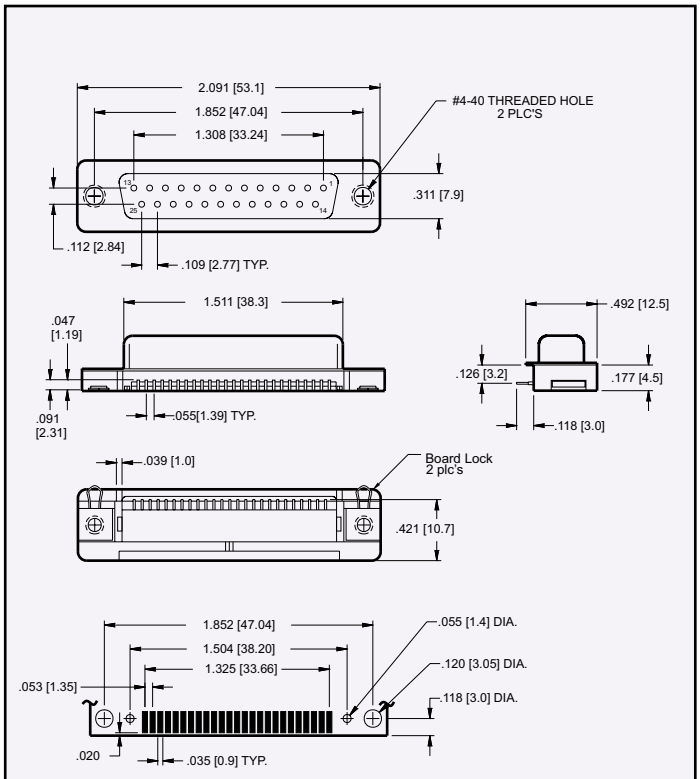

P.C.B. LAYOUT

Dimensions are in inches [mm]

PART NUMBERING

80 XX — 30 X — 08 X X — XX

SERIES CODE

NO. OF CONTACTS
09 = Plug
25 = Receptacle

CONNECTOR TYPE
P = Plug
S = Receptacle

CONTACT PLATING
50µ" Nickel Underplate

Mating Area	Tail
05 = Au Flash	100µ" Tin Lead
20 = 15µ" Gold	100µ" Tin Lead
30 = 30µ" Gold	100µ" Tin Lead

SHELL PLATING
50µ" Nickel Underplate
1 = Tin Plating (standard)

INSULATOR COLOR
1 = Black

ELECTRONIC CONNECTOR SERVICE INC. 11880 WESTERN AVE. STANTON, CA 90680 TOLL FREE (877) ECS-CONN TEL (714) 895-6351 FAX (714) 894-1858
WWW.ECSCONN.COM

8000 Series D-Subminiature .210 Right Angle

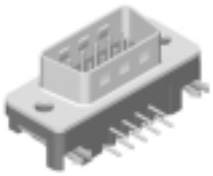

PLUG

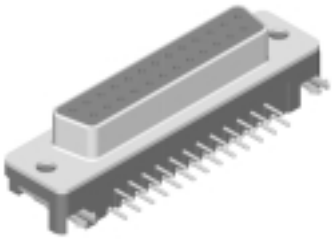

RECEPTACLE

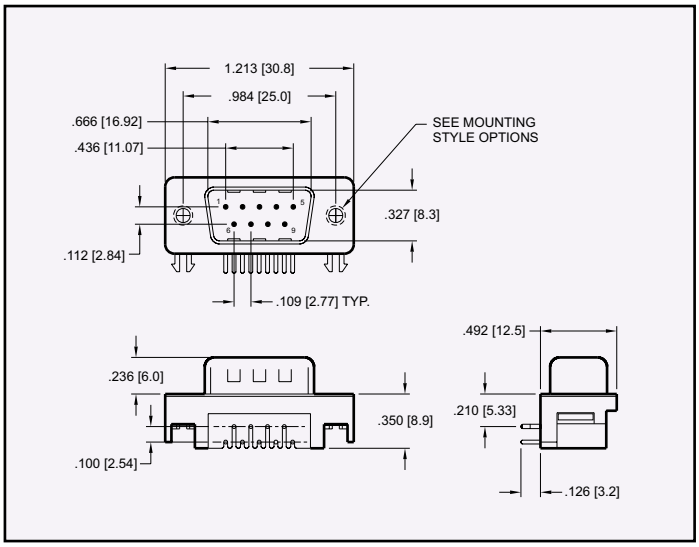

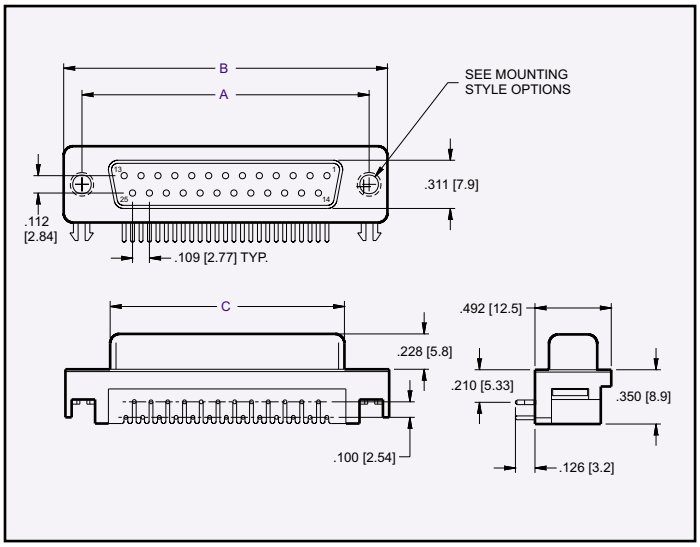

Receptacle

CONTACTS	A	B	C
09	0.984 [25.00]	1.213 [30.80]	0.642 [16.30]
25	1.852 [47.04]	2.091 [53.10]	1.508 [38.30]

Dimensions are in inches [mm]

PART NUMBERING

80 XX — 31 X — 08 X X — XX

SERIES CODE

NO. OF CONTACTS
09 = Plug
09, 25 = Receptacle

CONNECTOR TYPE
P = Plug
S = Receptacle

MOUNTING STYLE OPTIONS
See Page E-05 For Options
08 = Riveted Ground Hooks with #4-40 UNC Open
Consult Factory for other Mounting Options

CONTACT PLATING
50µ" Nickel Underplate

Mating Area	Tail
05 = Au Flash	100µ" Tin Lead
20 = 15µ" Gold	100µ" Tin Lead
30 = 30µ" Gold	100µ" Tin Lead

SHELL PLATING
50µ" Nickel Underplate
1 = Tin Plating (standard)

INSULATOR COLOR
1 = Black

8000 Series D-Subminiature .318 Right Angle

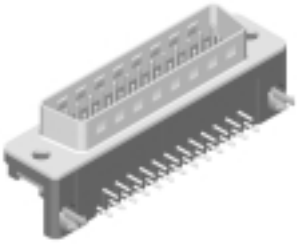

PLUG

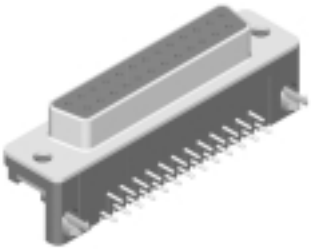

RECEPTACLE

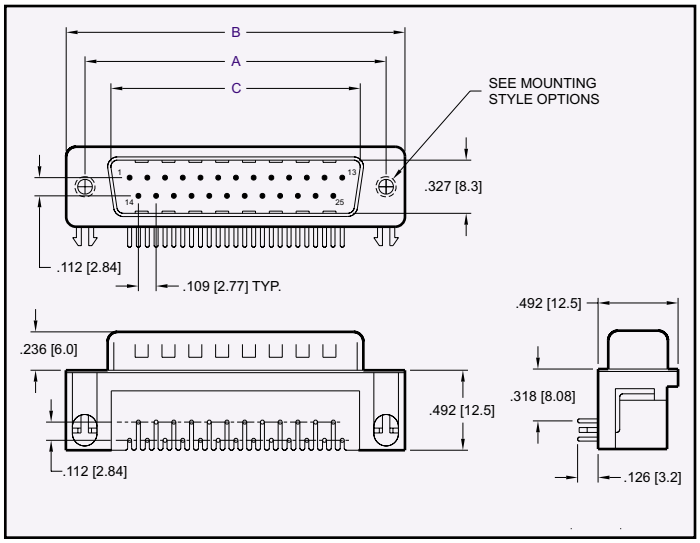

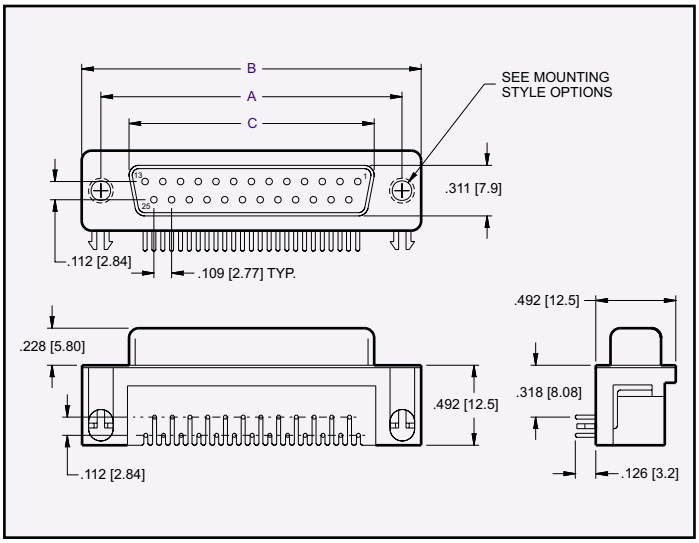

PLUG

CONTACTS	A	B	C
09	0.984 [25.00]	1.213 [30.80]	0.666 [16.92]
15	1.312 [33.32]	1.543 [39.20]	0.994 [25.25]
25	1.852 [47.04]	2.091 [53.10]	1.534 [38.96]
37	2.500 [63.50]	2.732 [69.40]	2.182 [55.42]

RECEPTACLE

CONTACTS	A	B	C
09	0.984 [25.00]	1.213 [30.80]	0.642 [16.30]
15	1.312 [33.32]	1.543 [39.20]	0.969 [24.60]
25	1.852 [47.04]	2.091 [53.10]	1.508 [38.30]
37	2.500 [63.50]	2.732 [69.40]	2.157 [54.80]

Dimensions are in inches [mm]

PART NUMBERING

80 XX — 32 X — XX X X — XX

SERIES CODE

NO. OF CONTACTS
09, 15, 25, 37

CONNECTOR TYPE
P = Plug
S = Receptacle

MOUNTING STYLE OPTIONS
See Page E-05 For Options
08 = Riveted Ground Hooks with #4-40 UNC Open
09 = Riveted Ground Tabs with #4-40 UNC Open
10 = Riveted Ground Hooks Pre-Loaded #4-40 UNC Hex Screws
11 = Assembly Ground Hooks By #4-40 UNC Hex Screws
Consult Factory for Other Mounting Options

CONTACT PLATING
50µ" Nickel Underplate

Mating Area	Tail
05 = Au Flash	100µ" Tin Lead
20 = 15µ" Gold	100µ" Tin Lead
30 = 30µ" Gold	100µ" Tin Lead

SHELL PLATING
50µ" Nickel Underplate
1 = Tin Plating (standard)

INSULATOR COLOR
1 = Black

8000 Series D-Subminiature .318 Right Angle with EMI Filter

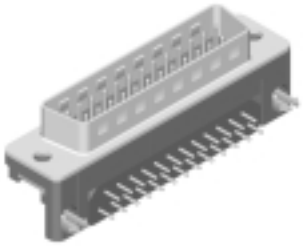

PLUG

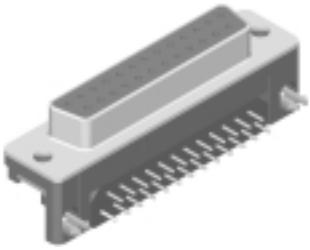

RECEPTACLE

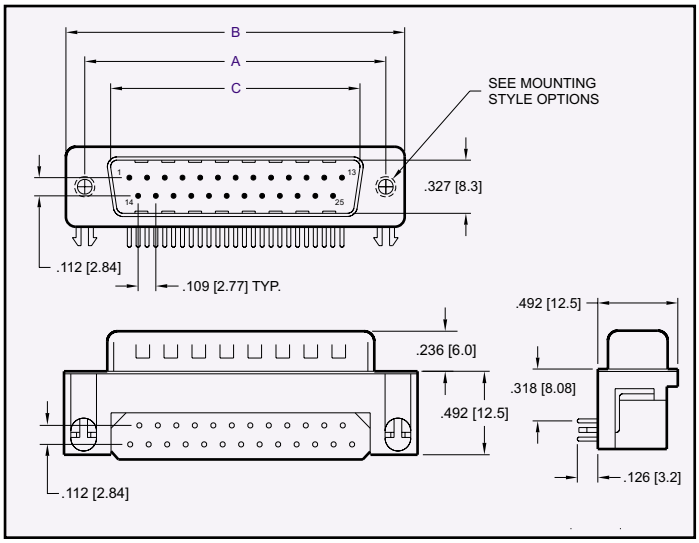

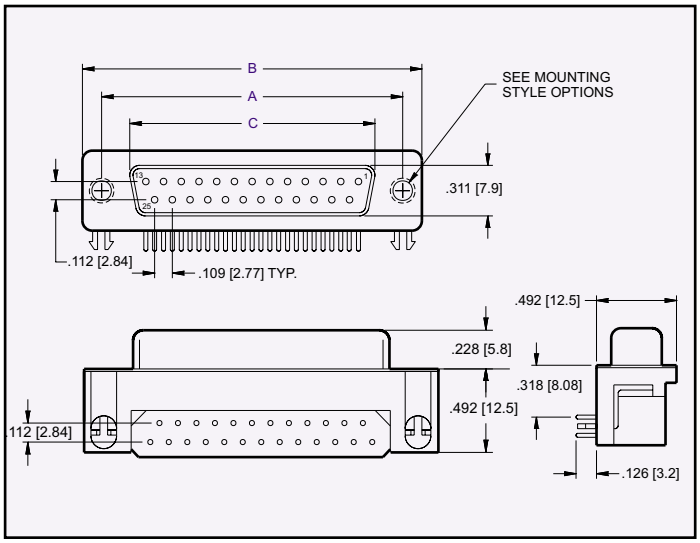

PLUG

CONTACTS	A	B	C
09	0.984 [25.00]	1.213 [30.80]	0.666 [16.92]
15	1.312 [33.32]	1.543 [39.20]	0.994 [25.25]
25	1.852 [47.04]	2.091 [53.10]	1.534 [38.96]
37	2.500 [63.50]	2.732 [69.40]	2.182 [55.42]

Dimensions are in inches [mm]

RECEPTACLE

CONTACTS	A	B	C
09	0.984 [25.00]	1.213 [30.80]	0.642 [16.30]
15	1.312 [33.32]	1.543 [39.20]	0.969 [24.60]
25	1.852 [47.04]	2.091 [53.10]	1.508 [38.30]
37	2.500 [63.50]	2.732 [69.40]	2.157 [54.80]

PART NUMBERING

80 XX — 33 X — XX X X — XX

SERIES CODE

NO. OF CONTACTS
09, 15, 25, 37

CONNECTOR TYPE
P = Plug
S = Receptacle

MOUNTING STYLE OPTIONS
See Page E-05 For Options
08 = Riveted Ground Hooks with #4-40 UNC Open
09 = Riveted Ground Tabs with #4-40 UNC Open
10 = Riveted Ground Hooks Pre-Loaded #4-40 UNC Hex Screws
11 = Assembly Ground Hooks By #4-40 UNC Hex Screws
Consult Factory for Other Mounting Options

CONTACT PLATING
50µ" Nickel Underplate

Mating Area	Tail
05 = Au Flash	100µ" Tin Lead
20 = 15µ" Gold	100µ" Tin Lead
30 = 30µ" Gold	100µ" Tin Lead

SHELL PLATING
50µ" Nickel Underplate
1 = Tin Plating (standard)

INSULATOR COLOR
1 = Black

8000 Series D-Subminiature .410 Right Angle

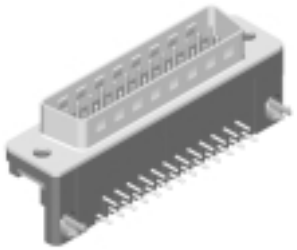

PLUG

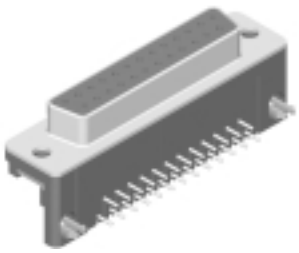

RECEPTACLE

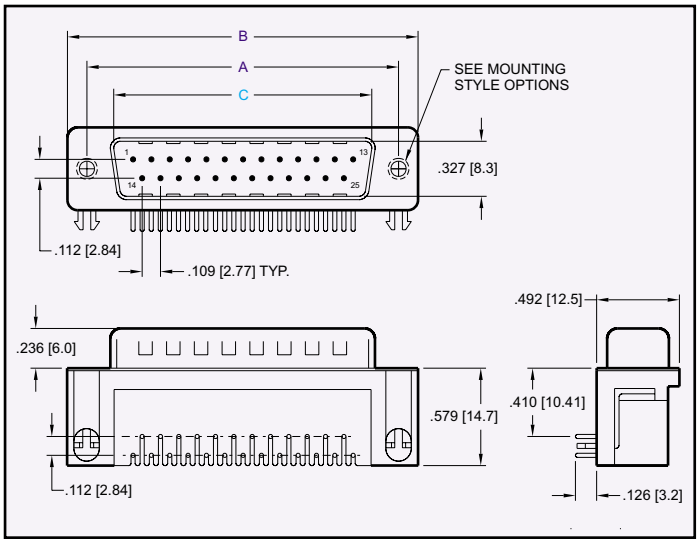

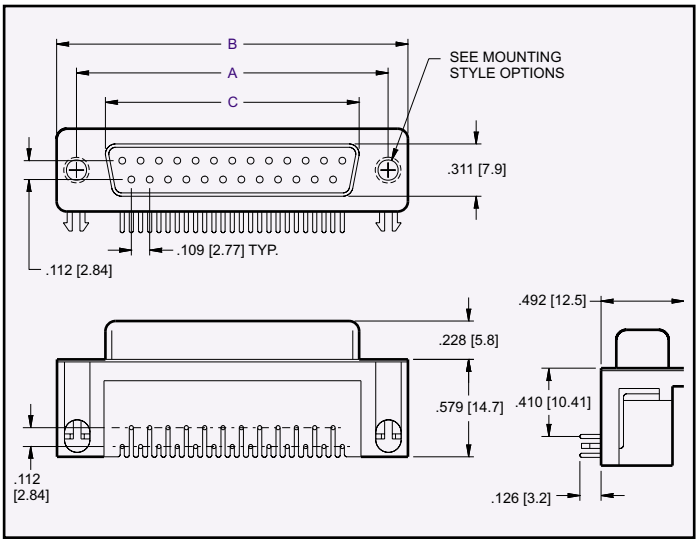

PLUG

CONTACTS	A	B	C
09	0.984 [25.00]	1.213 [30.80]	0.666 [16.92]
15	1.312 [33.32]	1.543 [39.20]	0.994 [25.25]
25	1.852 [47.04]	2.091 [53.10]	1.534 [38.96]
37	2.500 [63.50]	2.732 [69.40]	2.182 [55.42]

RECEPTACLE

CONTACTS	A	B	C
09	0.984 [25.00]	1.213 [30.80]	0.642 [16.30]
15	1.312 [33.32]	1.543 [39.20]	0.969 [24.60]
25	1.852 [47.04]	2.091 [53.10]	1.508 [38.30]
37	2.500 [63.50]	2.732 [69.40]	2.157 [54.80]

Dimensions are in inches [mm]

PART NUMBERING

80 XX — 35 X — XX X X — XX

SERIES CODE

NO. OF CONTACTS
09, 15, 25, 37

CONNECTOR TYPE
P = Plug
S = Receptacle

MOUNTING STYLE OPTIONS
See Page E-05 For Options
08 = Riveted Ground Hooks with #4-40 UNC Open
09 = Riveted Ground Tabs with #4-40 UNC Open
10 = Riveted Ground Hooks with Pre Loaded #4-40 UNC Hex Screws
11 = Assembly Ground Hooks By #4-40 UNC Hex Screws
Consult Factory for Other Mounting Options

CONTACT PLATING
50µ" Nickel Underplate

Mating Area	Tail
05 = Au Flash	100µ" Tin Lead
20 = 15µ" Gold	100µ" Tin Lead
30 = 30µ" Gold	100µ" Tin Lead

SHELL PLATING
50µ" Nickel Underplate
1 = Tin Plating (standard)

INSULATOR COLOR
1 = Black

8000 Series D-Subminiature .590 Right Angle

PLUG

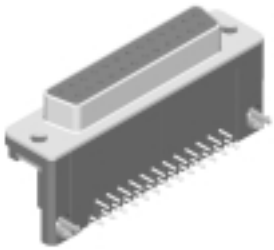

RECEPTACLE

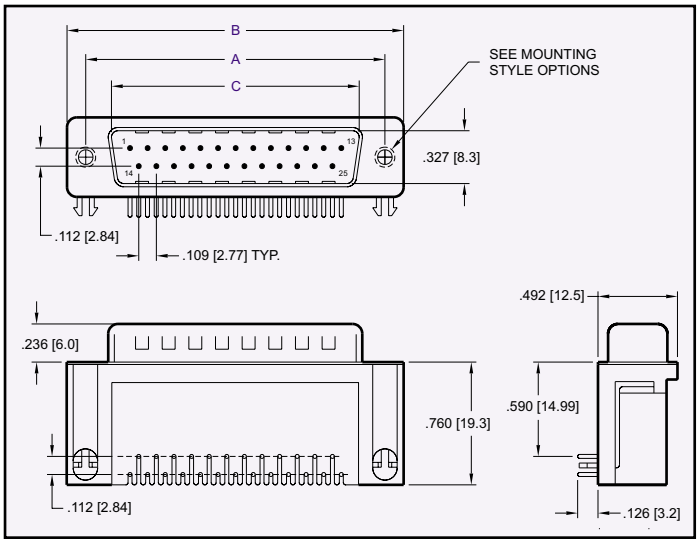

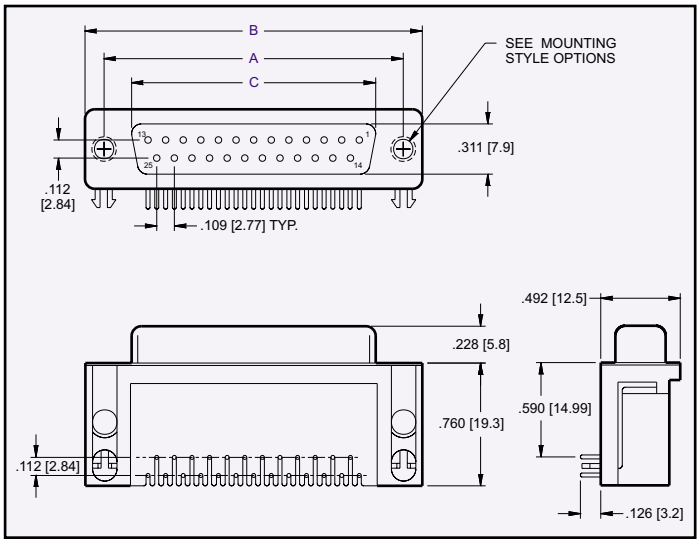

PLUG

CONTACTS	A	B	C
09	0.984 [25.00]	1.213 [30.80]	0.666 [16.92]
15	1.312 [33.32]	1.543 [39.20]	0.994 [25.25]
25	1.852 [47.04]	2.091 [53.10]	1.534 [38.96]
37	2.500 [63.50]	2.732 [69.40]	2.182 [55.42]

RECEPTACLE

CONTACTS	A	B	C
09	0.984 [25.00]	1.213 [30.80]	0.642 [16.30]
15	1.312 [33.32]	1.543 [39.20]	0.969 [24.60]
25	1.852 [47.04]	2.091 [53.10]	1.508 [38.30]
37	2.500 [63.50]	2.732 [69.40]	2.157 [54.80]

Dimensions are in inches [mm]

PART NUMBERING

80 XX — 37 X — XX X X — XX

SERIES CODE

NO. OF CONTACTS
09, 15, 25, 37

CONNECTOR TYPE
P = Plug
S = Receptacle

MOUNTING STYLE OPTIONS
See Page E-05 For Options
08 = Riveted Ground Hooks with #4-40 UNC Open
09 = Riveted Ground Tabs with #4-40 UNC Open
10 = Riveted Ground Hooks with Pre Loaded #4-40 UNC Hex Screws
11 = Assembly Ground Hooks By #4-40 UNC Hex Screws
Consult Factory for Other Mounting Options

CONTACT PLATING
50µ" Nickel Underplate

Mating Area	Tail
05 = Au Flash	100µ" Tin Lead
20 = 15µ" Gold	100µ" Tin Lead
30 = 30µ" Gold	100µ" Tin Lead

SHELL PLATING
50µ" Nickel Underplate
1 = Tin Plating (standard)

INSULATOR COLOR
1 = Black

8000 Series D-Subminiature
.318 Right Angle with Machined Contacts

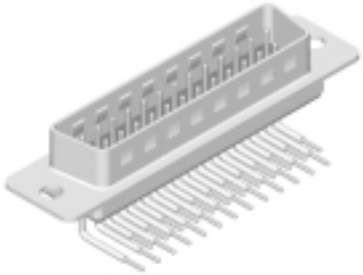

PLUG

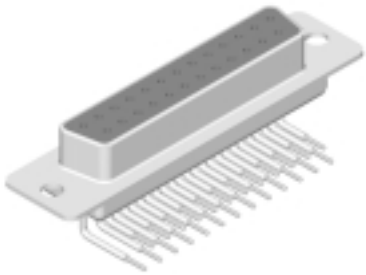

RECEPTACLE

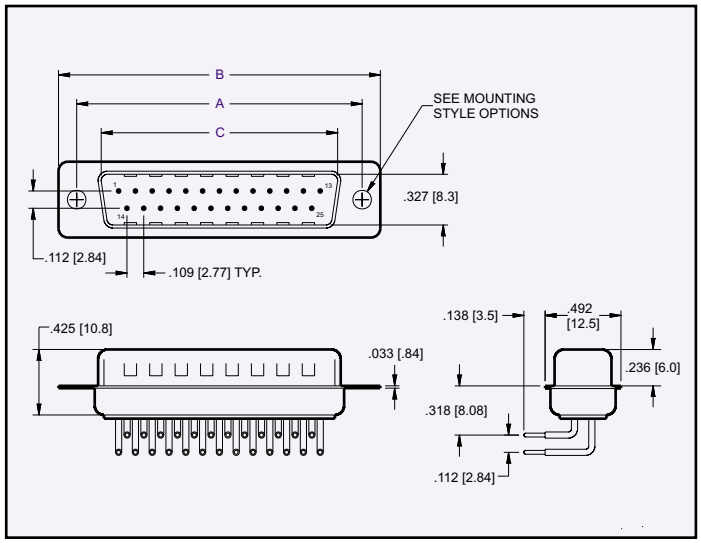

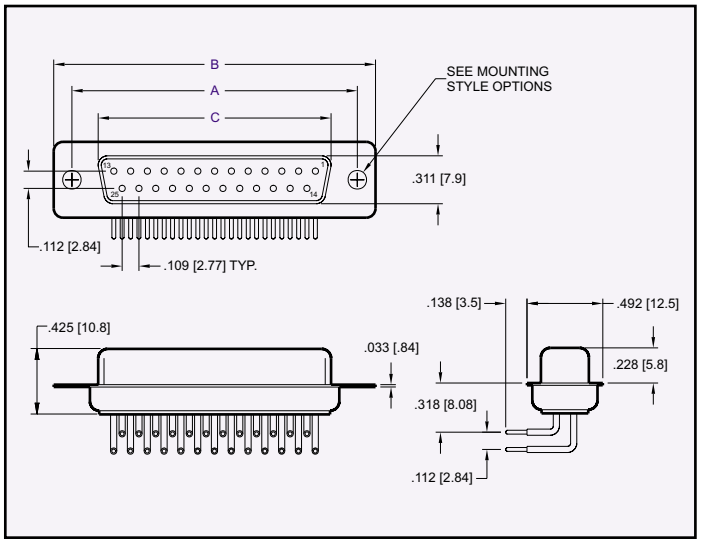

PLUG

CONTACTS	A	B	C
09	0.984 [25.00]	1.213 [30.80]	0.666 [16.92]
15	1.312 [33.32]	1.543 [39.20]	0.994 [25.25]
25	1.852 [47.04]	2.091 [53.10]	1.534 [38.96]
37	2.500 [63.50]	2.732 [69.40]	2.182 [55.42]

Dimensions are in inches [mm]

RECEPTACLE

CONTACTS	A	B	C
09	0.984 [25.00]	1.213 [30.80]	0.642 [16.30]
15	1.312 [33.32]	1.543 [39.20]	0.969 [24.60]
25	1.852 [47.04]	2.091 [53.10]	1.508 [38.30]
37	2.500 [63.50]	2.732 [69.40]	2.157 [54.80]

PART NUMBERING

80 XX — 34 X — XX X X — XX

SERIES CODE

NO. OF CONTACTS
09, 15, 25, 37

CONNECTOR TYPE
P = Plug
S = Receptacle

MOUNTING STYLE OPTIONS
See Page E-05 For Options
01 = .120 Riveted Front and Rear Shell
09 = Riveted Ground Tabs with #4-40 UNC Open
11 = Assembly Ground Hooks By #4-40 UNC Hex Screws
Consult Factory for Other Mounting Options

CONTACT PLATING
50µ" Nickel Underplate

Mating Area	Tail
03 = Gold Flash	Gold Flash
85 = 15µ" Gold	15µ" Gold
90 = 30µ" Gold	30µ" Gold

SHELL PLATING
50µ" Nickel Underplate
1 = Tin Plating (standard)
2 = Yellow Chromate

INSULATOR COLOR
1 = Black (standard)
2 = White

ELECTRONIC CONNECTOR SERVICE INC. 11880 WESTERN AVE. STANTON, CA 90680 TOLL FREE (877) ECS-CONN TEL (714) 895-6351 FAX (714) 894-1858
WWW.ECSCONN.COM

8000 Series D-Subminiature
.410 Right Angle with Machined Contacts

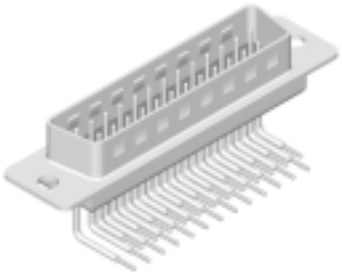

PLUG

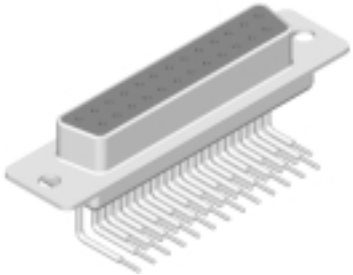

RECEPTACLE

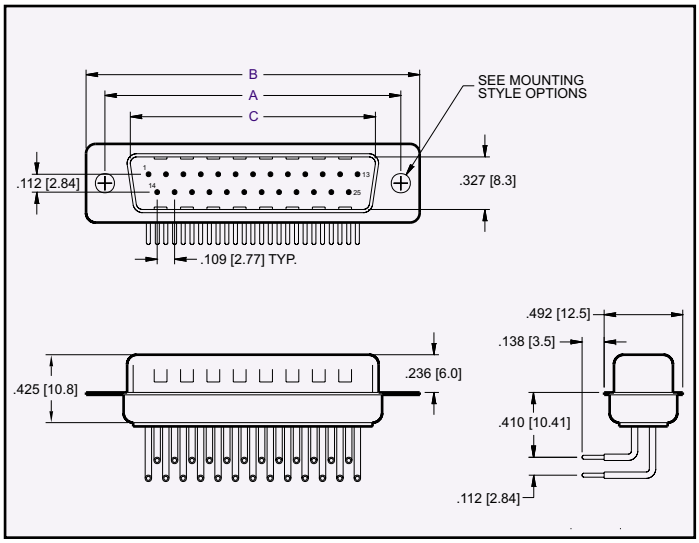

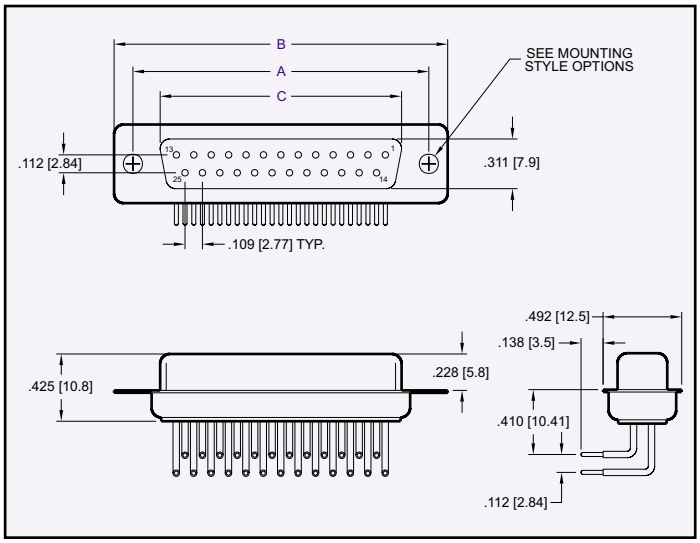

PLUG

CONTACTS	A	B	C
09	0.984 [25.00]	1.213 [30.80]	0.666 [16.92]
15	1.312 [33.32]	1.543 [39.20]	0.994 [25.25]
25	1.852 [47.04]	2.091 [53.10]	1.534 [38.96]
37	2.500 [63.50]	2.732 [69.40]	2.182 [55.42]

RECEPTACLE

CONTACTS	A	B	C
09	0.984 [25.00]	1.213 [30.80]	0.642 [16.30]
15	1.312 [33.32]	1.543 [39.20]	0.969 [24.60]
25	1.852 [47.04]	2.091 [53.10]	1.508 [38.30]
37	2.500 [63.50]	2.732 [69.40]	2.157 [54.80]

Dimensions are in inches [mm]

PART NUMBERING

80 XX — 36 X — XX X X — XX

SERIES CODE

NO. OF CONTACTS
09, 15, 25, 37

CONNECTOR TYPE
P = Plug
S = Receptacle

MOUNTING STYLE OPTIONS
See Page E-05 For Options
01 = .120 Riveted Front and Rear Shell
11 = Assembly Ground Hooks By #4-40 UNC Hex Screws
09 = Riveted Ground Tabs with #4-40 UNC Open (Stamped Contact)
Consult Factory for Other Mounting Options

CONTACT PLATING
50µ" Nickel Underplate

Mating Area	Tail
03 = Gold Flash	Gold Flash
85 = 15µ" Gold	15µ" Gold
90 = 30µ" Gold	30µ" Gold

SHELL PLATING
50µ" Nickel Underplate
1 = Tin Plating (standard)

INSULATOR COLOR
1 = Black (standard)
2 = White

8000 Series D-Subminiature .350 Right Angle High Density

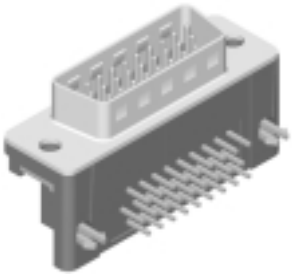

PLUG

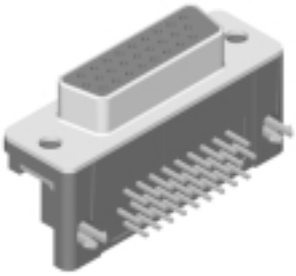

RECEPTACLE

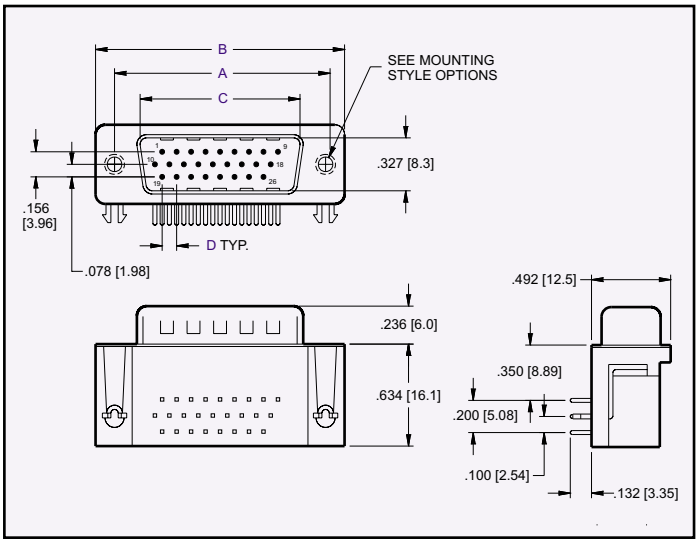

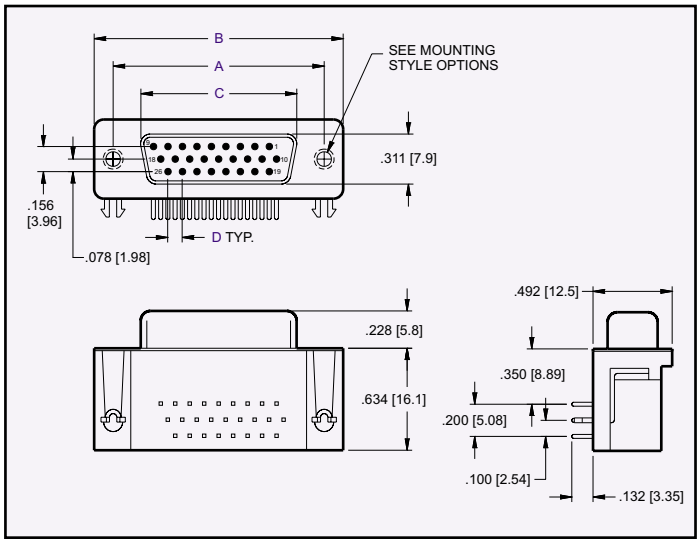

PLUG

CONTACTS	A	B	C	D
15	0.984 [25.00]	1.213 [30.80]	0.666 [16.92]	0.090 [02.29]
26	1.312 [33.32]	1.543 [39.20]	0.994 [25.25]	0.090 [02.29]
44	1.852 [47.04]	2.091 [53.10]	1.534 [38.96]	0.090 [02.29]
62	2.500 [63.50]	2.732 [69.40]	2.182 [55.42]	0.095 [02.41]

RECEPTACLE

CONTACTS	A	B	C	D
15	0.984 [25.00]	1.213 [30.80]	0.642 [16.30]	0.090 [02.29]
26	1.312 [33.32]	1.543 [39.20]	0.969 [24.60]	0.090 [02.29
44	1.852 [47.04]	2.091 [53.10]	1.508 [38.30]	0.090 [02.29]
62	2.500 [63.50]	2.732 [69.40]	2.157 [54.80]	0.095 [02.41]

Dimensions are in inches [mm]

PART NUMBERING

80 XX — 38 X — XX X X — XX

SERIES CODE

NO. OF CONTACTS
15, 26, 44, 62

CONNECTOR TYPE
P = Plug
S = Receptacle

MOUNTING STYLE OPTIONS
See Page E-05 For Options
08 = Riveted Ground Hooks with #4-40 UNC Open
09 = Riveted Ground Tabs with #4-40 UNC Open
10 = Riveted Ground Hooks with Pre Loaded #4-40 UNC Hex Screws
11 = Assembly Ground Hooks By #4-40 UNC Hex Screws
Consult Factory for Other Mounting Options

CONTACT PLATING
50µ" Nickel Underplate

Mating Area	Tail
05 = Au Flash	100µ" Tin Lead
20 = 15µ" Gold	100µ" Tin Lead
30 = 30µ" Gold	100µ" Tin Lead

SHELL PLATING
50µ" Nickel Underplate
1 = Tin Plating (standard)

INSULATOR COLOR
1 = Black

8000 Series D-Subminiature
.350 Right Angle High Density with EMI Filter

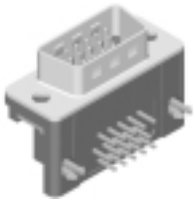

PLUG

RECEPTACLE

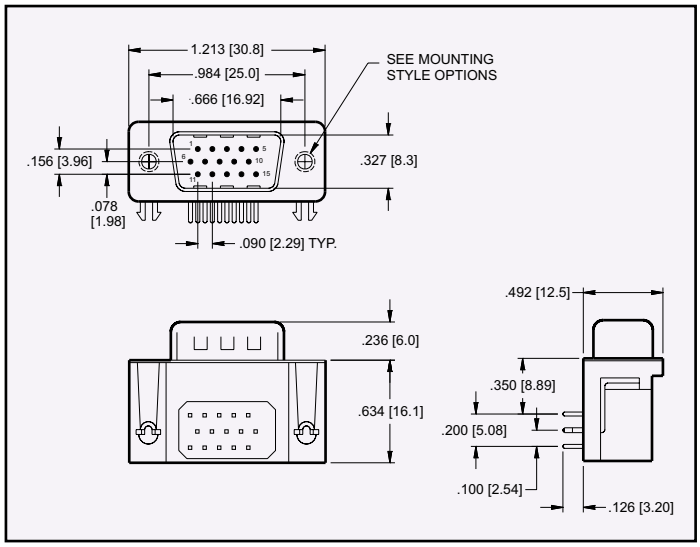

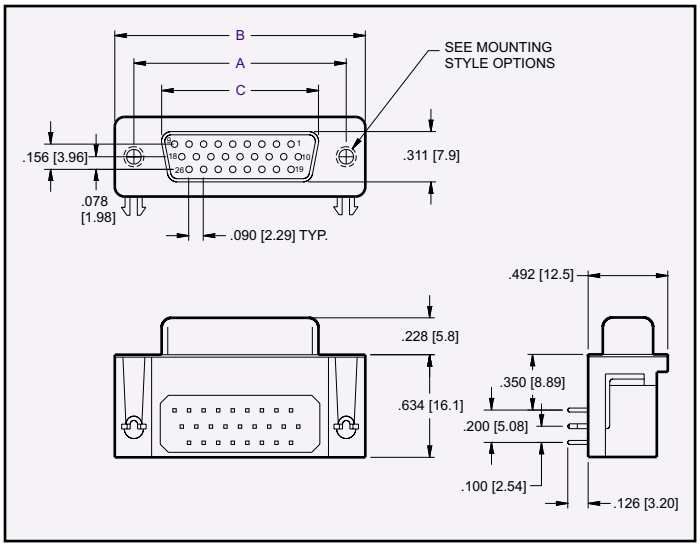

RECEPTACLE

CONTACTS	A	B	C
15	0.984 [25.00]	1.213 [30.80]	0.642 [16.30]
26	1.312 [33.32]	1.543 [39.20]	0.969 [24.60]

Dimensions are in inches [mm]

PART NUMBERING

80 XX — 39 X — 08 X X — XX

SERIES CODE

NO. OF CONTACTS
15 = Plug
15, 26 = Receptacle

CONNECTOR TYPE
P = Plug
S = Receptacle

MOUNTING STYLE OPTIONS
See Page E-05 For Options
08 = Riveted Ground Hooks with #4-40 UNC Open
Consult Factory for other Mounting Options

CONTACT PLATING
50µ" Nickel Underplate

Mating Area	Tail
05 = Au Flash	100µ" Tin Lead
20 = 15µ" Gold	100µ" Tin Lead
30 = 30µ" Gold	100µ" Tin Lead

SHELL PLATING
50µ" Nickel Underplate
1 = Tin Plating (standard)

INSULATOR COLOR
1 = Black

8000 Series SCSI
Vertical Mount PCB Solder and Press Fit

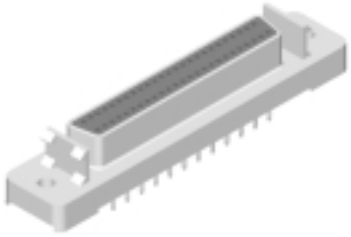

Metal Shell

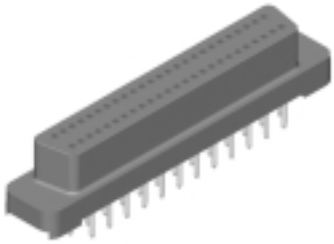

All Plastic

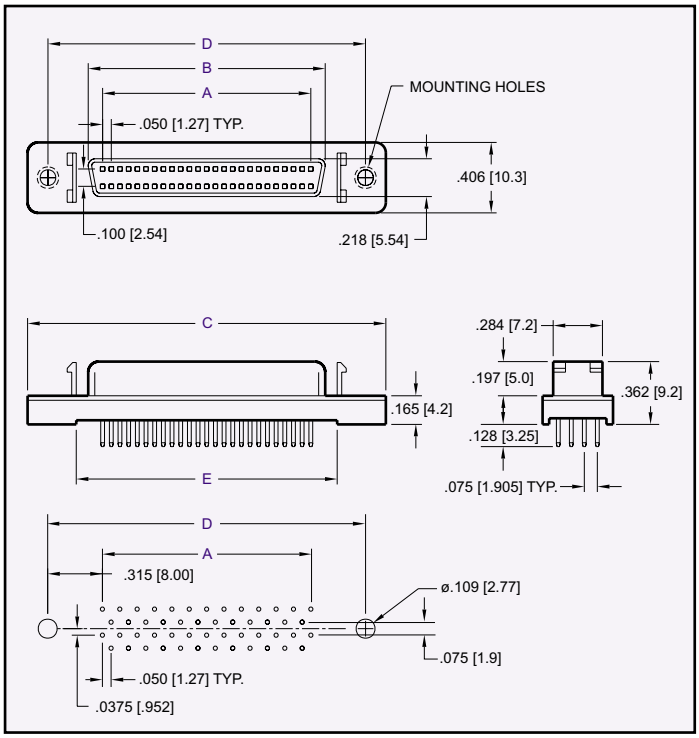

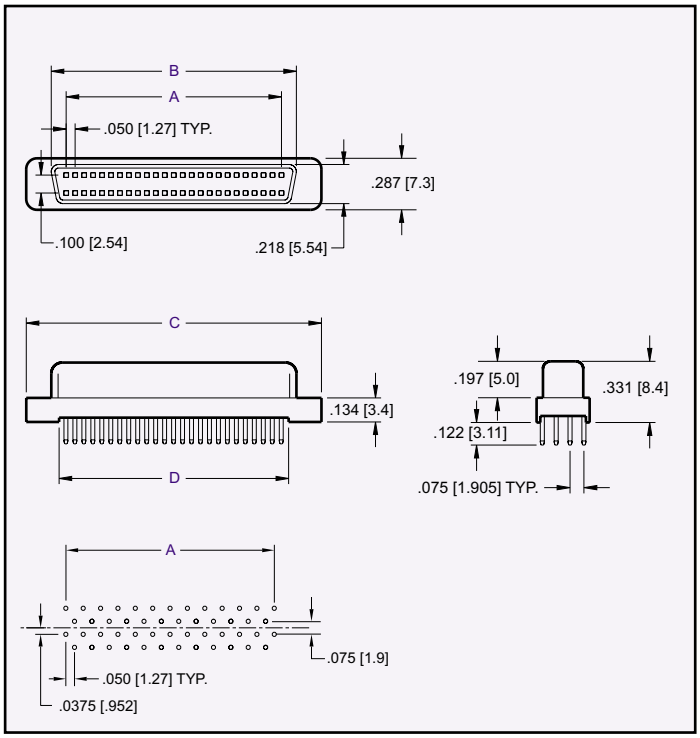

CONTACTS	A	B	C	D	E
50	1.200 [30.48]	1.366 [34.70]	2.065 [52.45]	1.830 [46.48]	1.504 [38.20]
All Plastic-50	1.200 [30.48]	1.366 [34.70]	1.644 [41.77]	1.279 [32.48]	1.279 [32.48]
68	1.650 [41.91]	1.816 [46.13]	2.515 [63.88]	2.280 [57.91]	1.954 [49.63]
All Plastic-68	1.650 [41.91]	1.816 [46.13]	2.094 [53.20]	1.729 [43.91]	1.729 [43.91]

Dimensions are in inches [mm]

Hole Size Requirements:

Drilled Hole Diameter: Ø.0276 [0.701]
Plating: .003 [0.70] min. Tin Lead over .001-.0015 [.025-.038] Copper.
Finished Hole Diameter: Ø.022 - Ø.026 [Ø.56 - Ø.066]

PART NUMBERING

80 XX — 50 S — XX X X — XX

SERIES CODE

NO. OF CONTACTS
50, 68

CONNECTOR TYPE
S = Receptacle

MOUNTING STYLE OPTIONS
01 = Without Mounting Holes
02 = 4-40 UNC
03 = 2-56 UNC
04 = M2.6 X 0.45
Consult Factory for other Mounting Options

CONTACT PLATING
50µ" Nickel Underplate

Mating Area	Tail
05 = Au Flash	100µ" Tin Lead
20 = 15µ" Gold	100µ" Tin Lead
30 = 30µ" Gold	100µ" Tin Lead

TAIL STYLE
1 = Solder
2 = Press Fit

SHELL
1 = All Plastic (solder only)
2 = Metal Shell
3 = Metal Shell with Latch Locks

8000 Series SCSI
Right Angle Mount

68 Positions

50 Positions

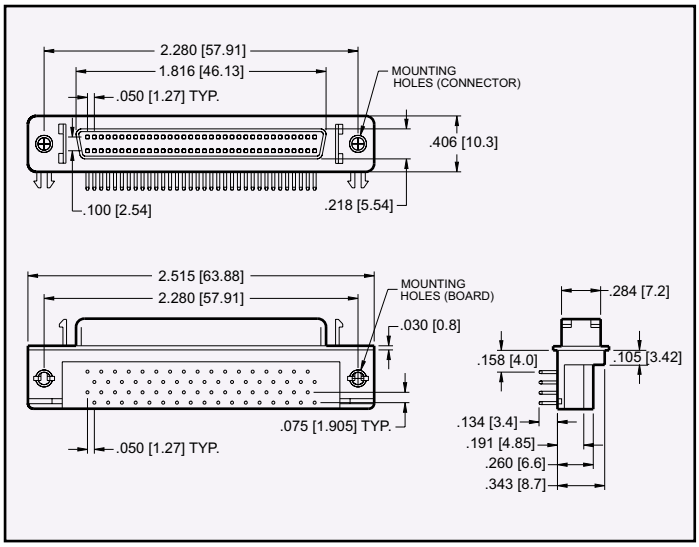

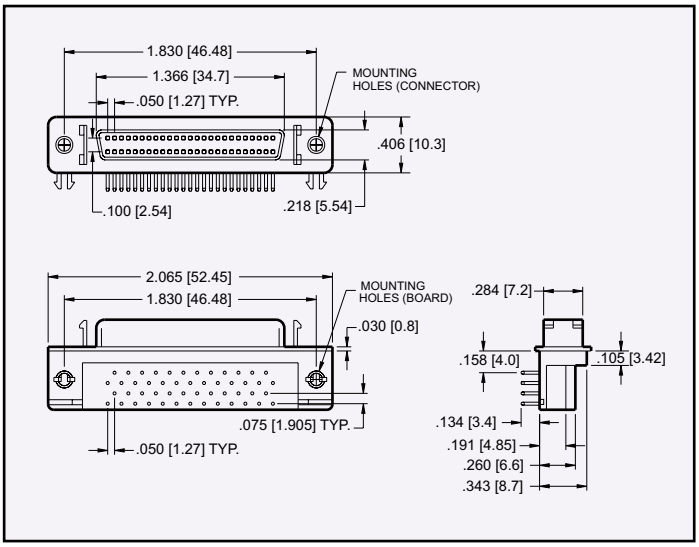

Dimensions are in inches [mm]

PART NUMBERING

80 XX — 51 X — XX X X — XX

SERIES CODE

NO. OF CONTACTS
50, 68

CONNECTOR TYPE
P = Plug
S = Receptacle

MOUNTING STYLE BOARD
00 = None
01 = .120 [3.05] Dia. Thru Holes
02 = 4-40 UNC Threaded Holes
03 = Board Locks

MOUNTING STYLE CONNECTOR
0 = None
1 = .120 [3.05] Dia. Thru Holes
2 = 4-40 UNC Threaded Holes
3 = 2-56 UNC Threaded Holes
4 = M2.6 X 0.45

SHELL TYPE
1 = With Latch Locks
2 = Without Latch Locks

CONTACT PLATING
50µ" Nickel Underplate

Mating Area	Tail
05 = Au Flash	100µ" Tin Lead
20 = 15µ" Gold	100µ" Tin Lead
30 = 30µ" Gold	100µ" Tin Lead

8500 Series Ribbon Connectors
RJ 21 Telecommunications Plug and Receptacle

Specifications

Insulator Material: Glass filled polyester, type PBT, 94-VO, UL Recognized.
Contact Material: Phosphor Bronze Alloy CA510
Contact Plating: Gold over 50µ" Nickel, and Tin Lead (See part numbering for thicknesses).
Current Rating: 3 amp at 30°C
Contact Resistance:
Contact to Daughter Card: 10m ohms
Compliant section to P.T.H.: 2m ohms
Insulation Resistance:
5000M ohms
Dielectric Withstand Voltage:
1000 V AC
Compliant Section Insertion Force:
40 lbs max per contact
Compliant Section Withdrawal Force:
10 lbs min per contact
Hole Size Requirements:
Drilled Hole Dia.: .0378± .001
Plating: .001 to .003 copper and .0003 min Tin Lead.
Finished Hole Diameter:
.032 - .035
Recommended Board Thickness: .093 to .125

Features

- Flat Plate Installation to eliminate the need for secondary operation tooling which can damage the connector when installed into motherboard.
- Available with through-hole 4-40 insert or 4-40 stand-off mounting hardware.
- Available in selective gold plate at contact point
- Many other custom options available, consult factory

Recognized under the recognized component Program of Underwriters Laboratories, Inc.

For drawings, technical data or samples, contact E.C.S. at 714/895-6351

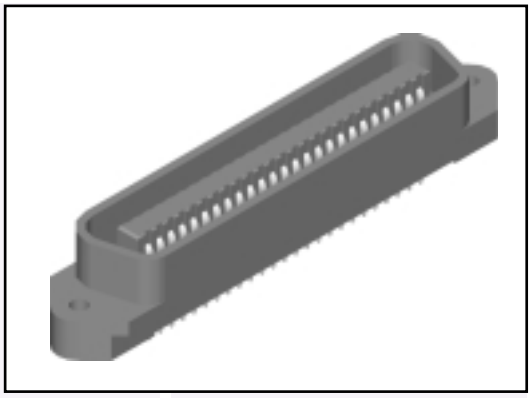

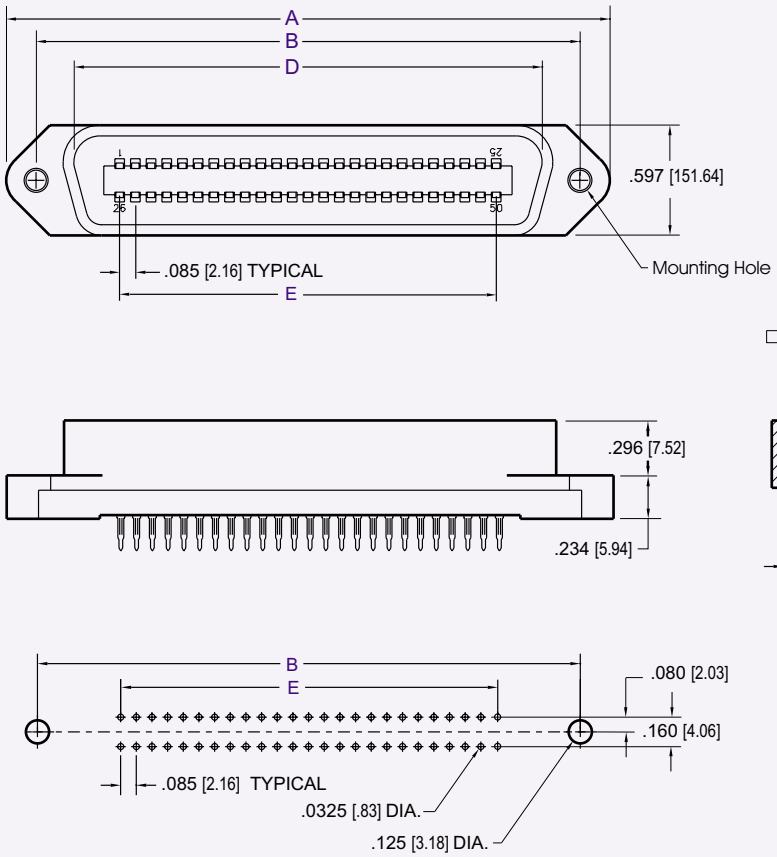

Dimensions are in inches [mm]

MOUNTING OPTIONS

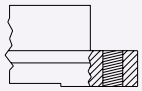

1= #4-40 FLUSH INSERT

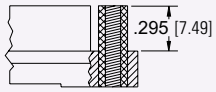

2= #4-40 STAND-OFF OPTION

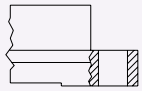

3= THRU HOLE

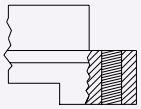

4= #4-40 STAND-OFF

NO. OF CONTACTS	A	B	C	D	E
25/50	3.270 / 83.06	2.946 / 74.83	2.520 / 64.01	2.536 / 64.41	2.040 / 51.82
32/64	3.865 / 98.17	3.541 / 89.94	3.115 / 79.12	3.131 / 79.53	2.635 / 66.93

Dimensions are in inches [mm]

PART NUMBERING

85 XX — P X X — XX

SERIES CODE
.085 X .160 Centers

NO. CONTACT PAIRS
25, 32

CONNECTOR STYLE
P = Plug

TAIL LENGTH
1 = .180 [4.57] Press-Fit
2 = .300 [7.62] Press-Fit
3 = .100 [2.54] Surface Mount
4 = .180 [4.57] Solder

MOUNTING OPTIONS
1 = #4-40 Flush Insert
2 = #4-40 Stand-Off Option
3 = Ø 0.125 Thru Hole
4 = Stand Off
8 = #4-40 tapped hole

PLATING
50µ" Nickel Underplate

Mating Area	Tail
05 = Au Flash	100µ" Tin Lead
20 = 15µ" Gold	100µ" Tin Lead
30 = 30µ" Gold	100µ" Tin Lead

CONSULT FACTORY FOR CUSTOM CONNECTORS BUILT TO YOUR SPECIFICATION

ELECTRONIC CONNECTOR SERVICE INC. 11880 WESTERN AVE. STANTON, CA 90680 TOLL FREE (877) ECS-CONN TEL (714) 895-6351 FAX (714) 894-1858
WWW.ECSCONN.COM

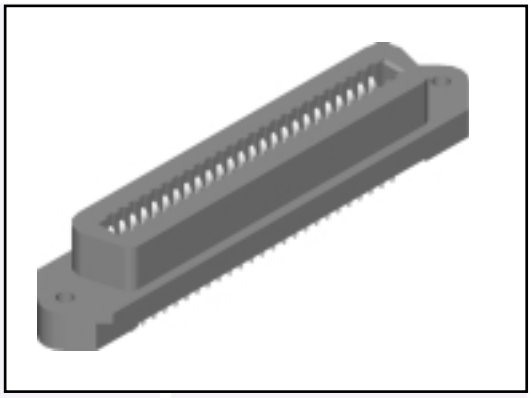

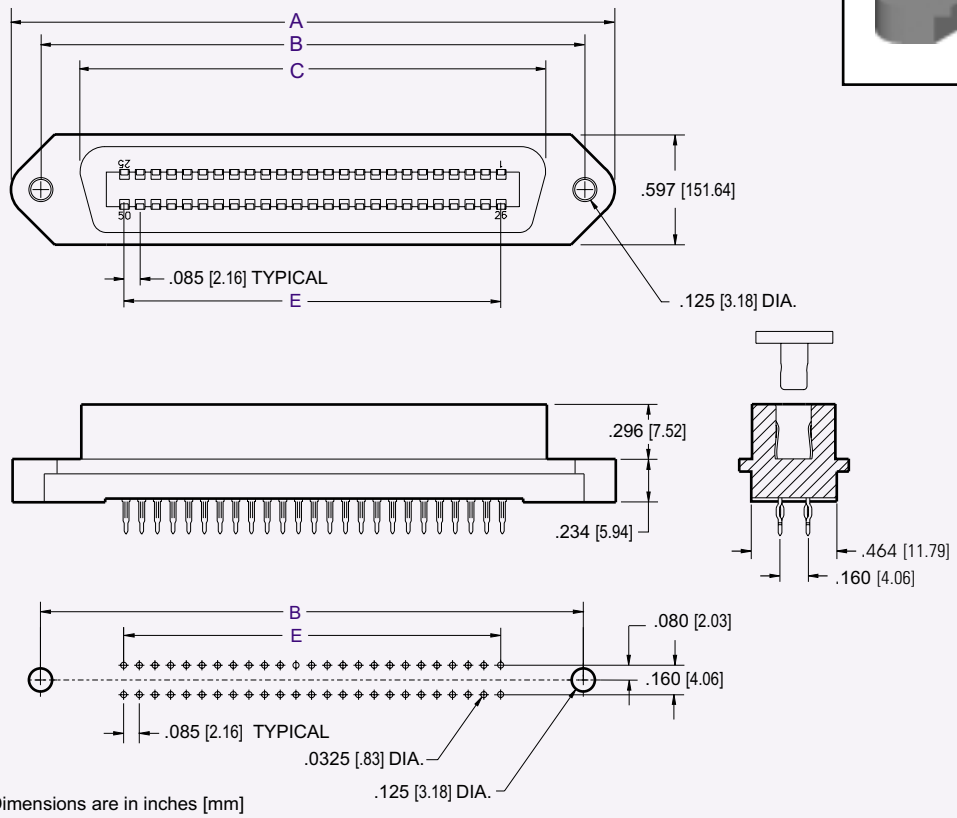

Dimensions are in inches [mm]

MOUNTING OPTIONS

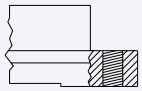

1= #4-40 FLUSH INSERT

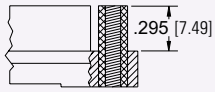

2= #4-40 STAND-OFF OPTION

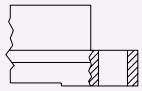

3= THRU HOLE

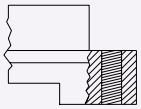

4= #4-40 STAND-OFF

NO. OF CONTACTS	A	B	C	D	E
25/50	3.270 / 83.06	2.946 / 74.83	2.520 / 64.01	2.536 / 64.41	2.040 / 51.82
32/64	3.865 / 98.17	3.541 / 89.94	3.115 / 79.12	3.131 / 79.53	2.635 / 66.93

Dimensions are in inches [mm]

PART NUMBERING

85 XX — R X X — XX

SERIES CODE
.085 X .160 Centers

NO. CONTACT PAIRS
25, 32

CONNECTOR STYLE
R = Receptacle

TAIL LENGTH
1 = .180 [4.57] Press-Fit
2 = .300 [7.62] Press-Fit
3 = .100 [2.54] Surface Mount
4 = .180 [4.57] Solder

MOUNTING STYLE
1 = #4-40 Flush Insert
2 = #4-40 Stand-Off Option
3 = .125 dia. Thru Hole
4 = Stand Off
8 = #4-40 tapped hole

PLATING
50µ" Nickel Underplate

Mating Area	Tail
05 = Au Flash	100µ" Tin Lead
20 = 15µ" Gold	100µ" Tin Lead
30 = 30µ" Gold	100µ" Tin Lead

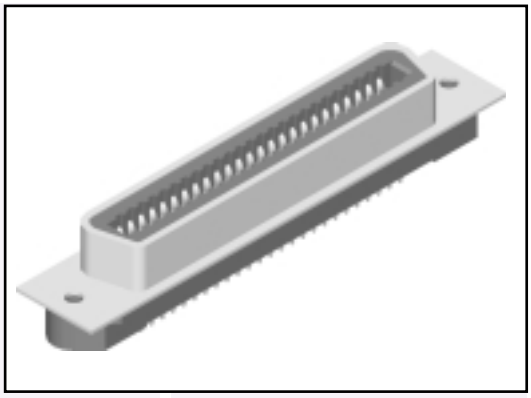

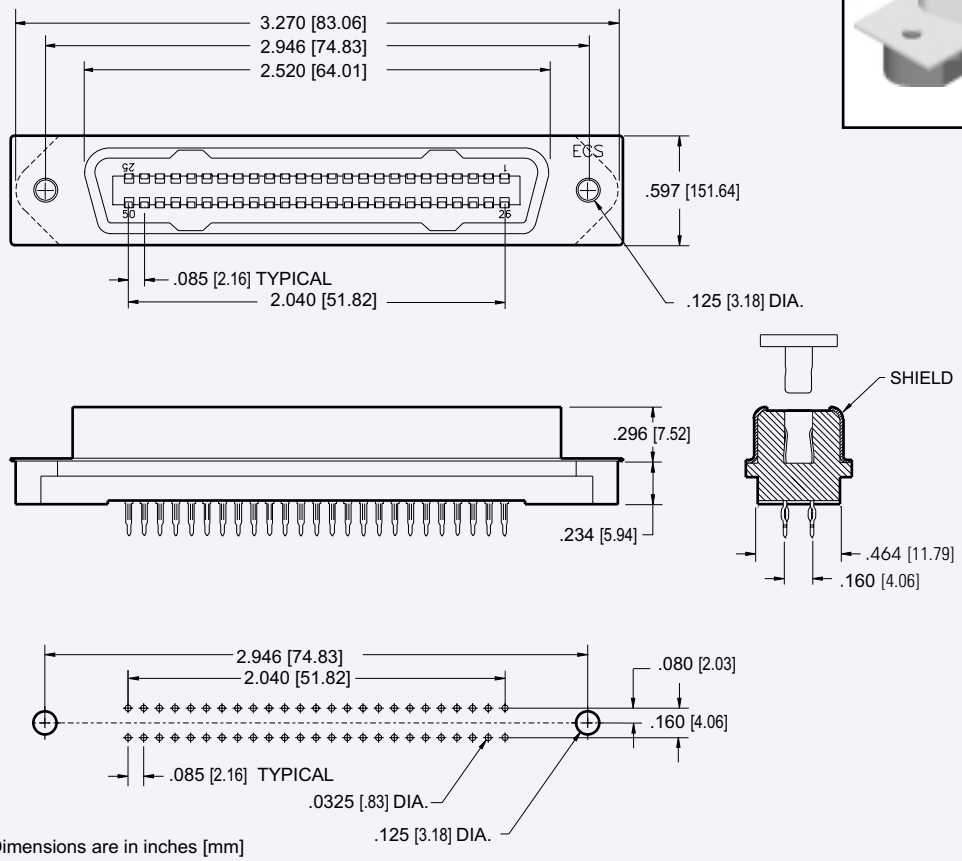

Dimensions are in inches [mm]

MOUNTING OPTIONS

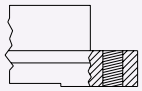

1= #4-40 FLUSH INSERT

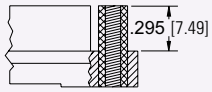

2= #4-40 STAND-OFF OPTION

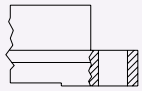

3= THRU HOLE

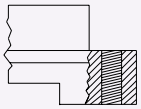

4= #4-40 STAND-OFF

Dimensions are in inches [mm]

PART NUMBERING

85 25 — R X X — XX — SH

SERIES CODE
.085 X .160 Centers

NO. CONTACT PAIRS
25

CONNECTOR STYLE
R = Receptacle

TAIL LENGTH
1 = .180 [4.57] Press-Fit
2 = .300 [7.62] Press-Fit
3 = .100 [2.54] Surface Mount
4 = .180 [4.57] Solder

MOUNTING OPTIONS
1 = #4-40 Flush Insert
2 = #4-40 Stand-Off Option
3 = .125 dia. Thru Hole
4 = Stand Off
8 = #4-40 tapped hole

PLATING
50µ" Nickel Underplate

Mating Area	Tail
05 = Au Flash	100µ" Tin Lead
20 = 15µ" Gold	100µ" Tin Lead
30 = 30µ" Gold	100µ" Tin Lead

8500 Series Ribbon Connectors
Plug and Receptacle Right Angle

Specifications

Insulator Material: Glass filled polyester, Thermoplastic, 94-VO, UL Recognized.
Contact Material: Phosphor Bronze Alloy CA510
Contact Plating: Gold over 50µ" Nickel, and tin-lead (See part numbering for thicknesses).
Contact Resistance: 20m ohms max. at 1 AMP DC.
Insulation Resistance: 1000M ohms at 500 V DC.
Dielectric Withstand Voltage: 1000 V AC/rms 60Hz for 1 min.
Current Rating: 3 AMP.
Voltage Rating: 250 V AC/rms at 60Hz.
Shell Plating: Steel, 100µ" Tin over 50µ" min. Nickel.

Features

- Available in selective gold plate at contact point
- Many other custom options available, consult factory

Recognized under the recognized component Program of Underwriters Laboratories, Inc.

For drawings, technical data or samples, contact E.C.S. at 714/895-6351

PART NUMBERING

85 XX — X 5 X — XX — SH X

SERIES CODE
.085 X .160 Centers

NO. CONTACT PAIRS
07, 12, 18, 25

CONNECTOR STYLE
P = Plug
R = Receptacle

TAIL STYLE
5 = Right Angle

MOUNTING STYLE
CONNECTOR - BOARD
1 = #4-40 Screw - #4-40 UNC
2 = Bail Latch - Board Lock
3 = #4-40 Screw - Board Lock
4 = #4-40 UNC - Board Lock
5 = Bail Latch - #4-40 UNC
Consult Factory for other Mounting Styles

PLATING
50µ" Nickel Underplate

Mating Area	Tail
05 = Flash Au	100µ" Tin Lead
20 = 15µ" Gold	100µ" Tin Lead
30 = 30µ" Gold	100µ" Tin Lead

ORIENTATION
1 = Reverse
9 = Short Tail (.126" - .138")
BLANK = Standard

CONTACTS	A	B	C	D	E	F	G
14	1.004 [25.50]	0.679 [17.24]	0.988 [25.10]	0.697 [17.70]	0.510 [12.96]	1.732 [44.00]	1.417 [36.00]
24	1.421 [36.10]	1.102 [27.98]	1.409 [35.80]	1.131 [28.74]	0.935 [23.76]	2.156 [54.76]	1.843 [46.80]
36	1.936 [49.18]	1.609 [40.88]	1.925 [48.90]	1.638 [41.60]	1.446 [36.72]	2.670 [67.82]	2.350 [59.70]
50	2.537 [64.45]	2.209 [56.10]	2.522 [64.06]	2.232 [56.70]	2.041 [51.84]	3.265 [82.92]	2.949 [74.90]

DIMENSIONS ARE IN INCHES & [MM]

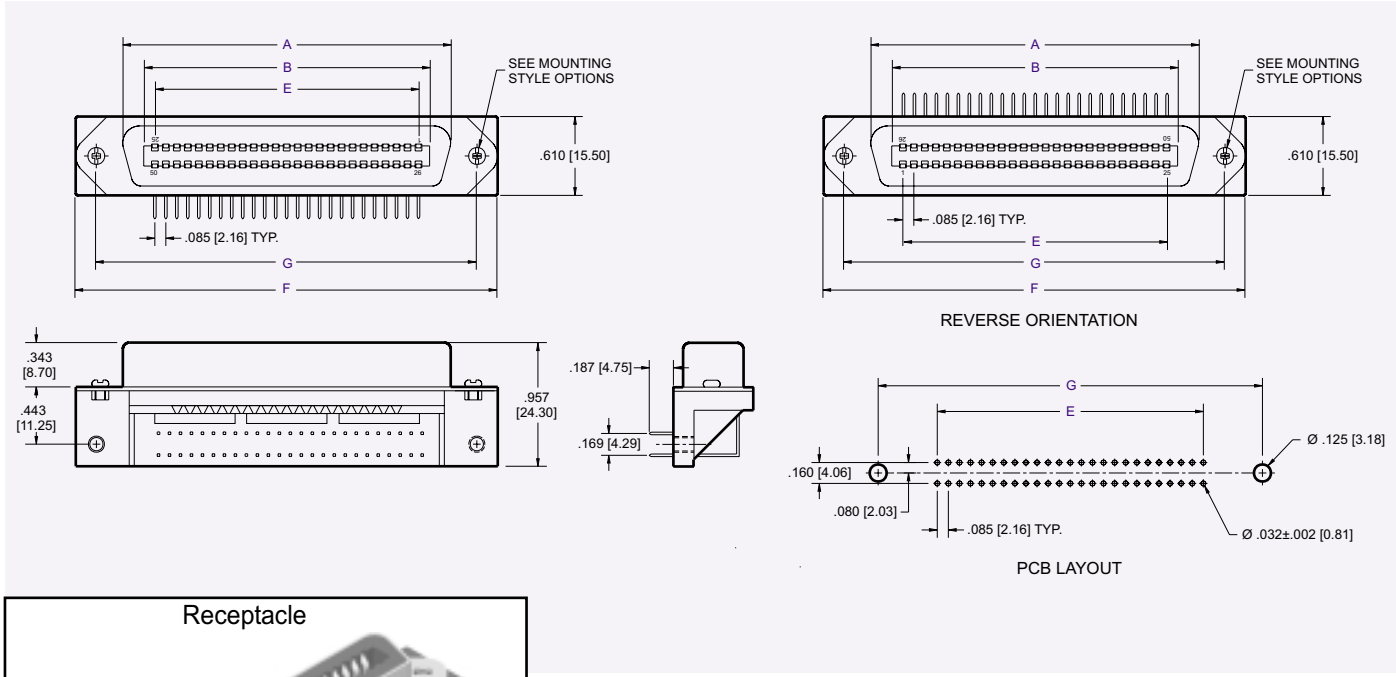

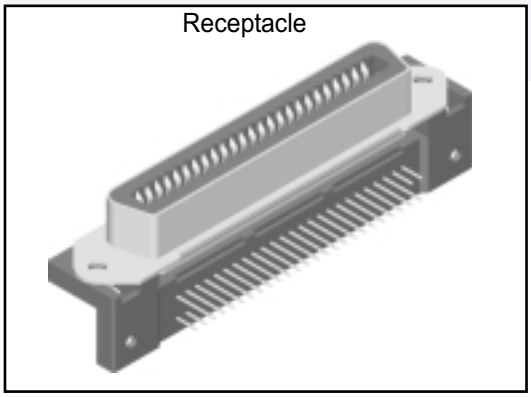

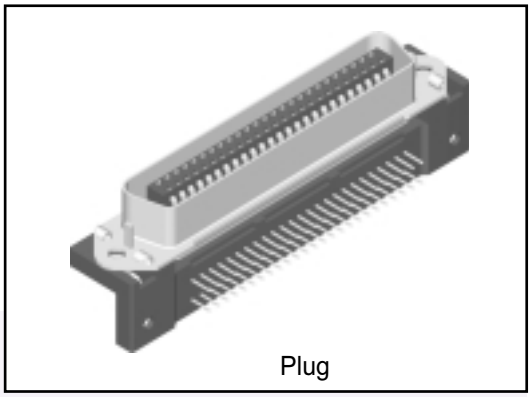

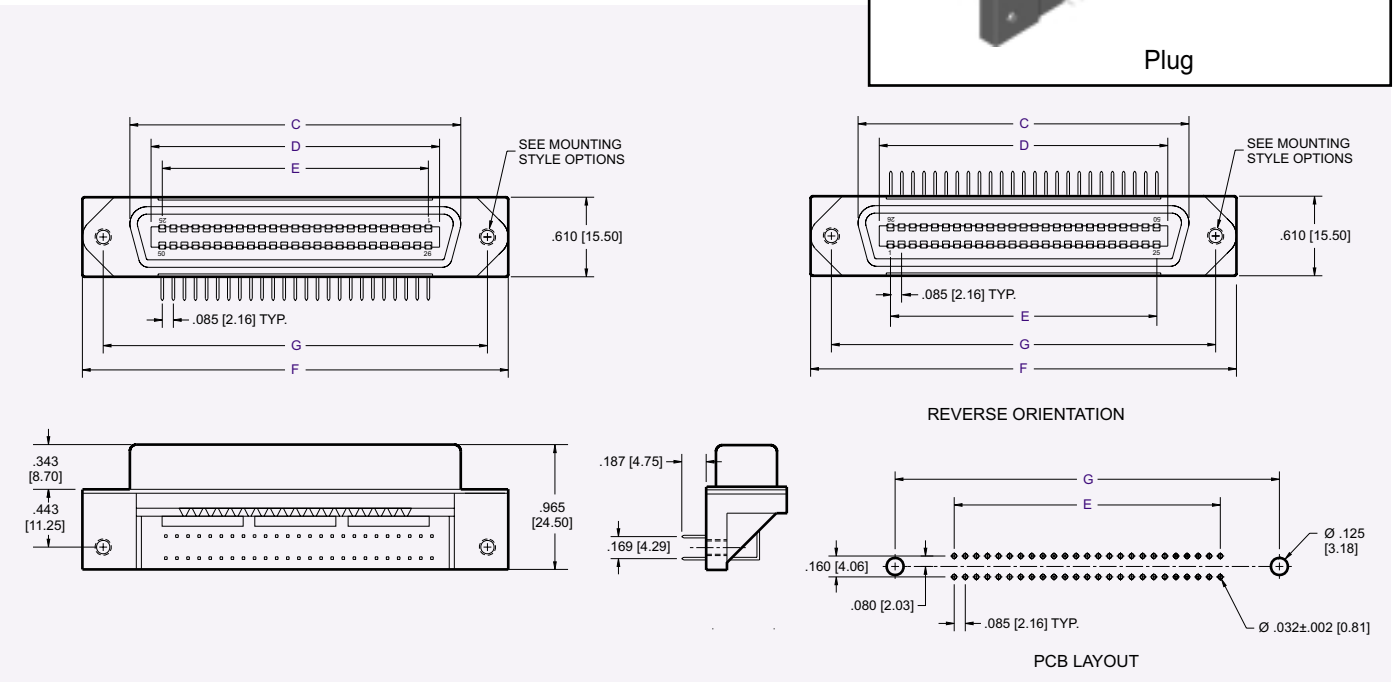

Dimensions are in inches [mm]

8500 Series Ribbon Connectors
Plug and Receptacle for Cable

Specifications

Insulator Material: Glass filled polyester, Thermoplastic, 94-VO, UL Recognized.
Contact Material: Phosphor Bronze Alloy CA510
Contact Plating: Gold over 50µ" Nickel, and Tin Lead (See part numbering for thicknesses).
Contact Resistance: 20m ohms max. at 1 AMP DC.
Insulation Resistance: 1000M ohms at 500 V DC.
Dielectric Withstand Voltage: 1000 V AC/rms 60Hz for 1 min.
Current Rating: 5 AMP.
Voltage Rating: 250 V AC/rms at 60Hz.
Shell Plating: Steel, 100µ" Tin over 50µ" min. Nickel.

Features

- Available in selective gold plate at contact point
- Many other custom options available, consult factory

Recognized under the recognized component Program of Underwriters Laboratories, Inc.

For drawings, technical data or samples, contact E.C.S. at 714/895-6351

PLUG

RECEPTACLE

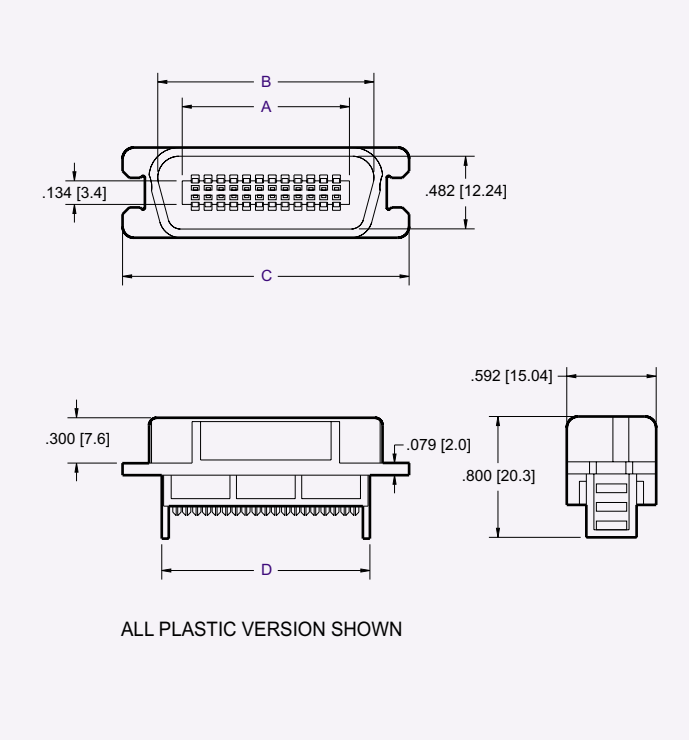

ALL PLASTIC VERSION SHOWN

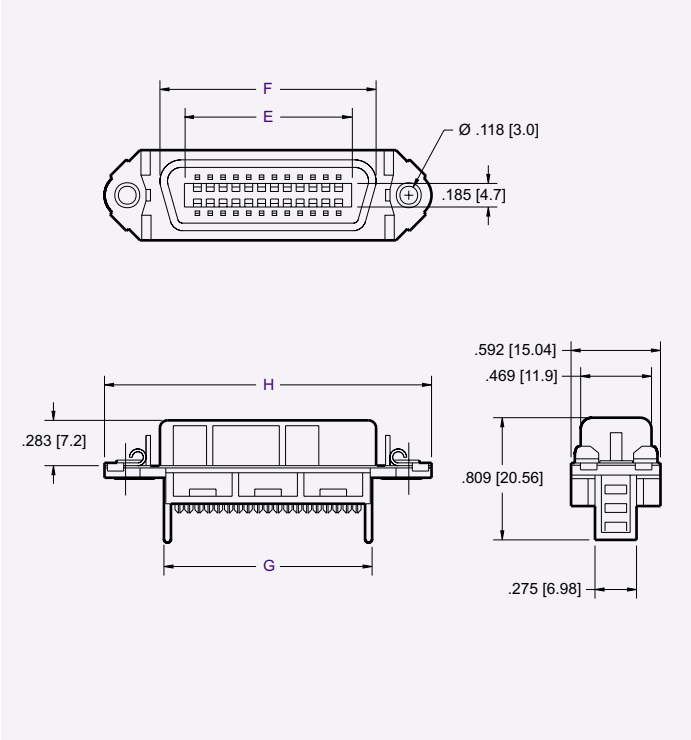

CONTACTS	A	B	C	D	E	F	G	H
24	1.104 [28.04]	1.439 [36.56]	1.897 [48.18]	1.378 [35.00]	1.106 [28.10]	1.417 [36.00]	1.387 [35.24]	2.165 [55.00]
36	1.608 [40.86]	1.941 [49.30]	1.925 [48.90]	2.008 [51.00]	1.629 [41.38]	1.925 [48.90]	1.972 [50.08]	2.676 [67.96]
50	2.200 [55.88]	2.531 [64.30]	2.996 [76.10]	3.260 [82.80]	2.221 [56.40]	2.524 [64.10]	2.712 [68.88]	3.278 [83.26]

DIMENSIONS ARE IN INCHES & [MM]

PART NUMBERING

85 XX — X 6 X — XX — SH X

SERIES CODE
.085 X .160 Centers

NO. CONTACT PAIRS
12, 18, 25

CONNECTOR STYLE
P = Plug
R = Receptacle

IDC
6 = IDC Type

LATCH
1 = With Bail Latch
2 = Without Bail Latch

PLATING
50µ" Nickel Underplate

Mating Area	Tail
05 = Au Flash	100µ" Tin Lead
20 = 15µ" Gold	100µ" Tin Lead
30 = 30µ" Gold	100µ" Tin Lead

SHIELD
SH = With Shield
Blank = All Plastic

STRAIN RELIEF
5 = With Strain Relief
Blank = No Strain Relief

CONSULT FACTORY FOR CUSTOM CONNECTORS BUILT TO YOUR SPECIFICATION

ELECTRONIC CONNECTOR SERVICE INC. 11880 WESTERN AVE. STANTON, CA 90680 TOLL FREE (877) ECS-CONN TEL (714) 895-6351 FAX (714) 894-1858
WWW.ECSCONN.COM

9800 Series Headers
.039 [1.00] SMT Strip Header

Specifications

Insulator Material: LCP 94V-0 UL Recognized.
Contact Material: Copper Alloy
Contact Plating: Gold over .000050 Ni
(See contact plating options)
Insulation Resistance: 5000 M ohms min.
Dielectric Withstand Voltage: 500 VAC
Current Rating: 1 AMP
Operating Temperature: -40°C To +105°C
Max. Processing Temp.: 230°C for 60 seconds
UL File Numbers: E146967 & E176234

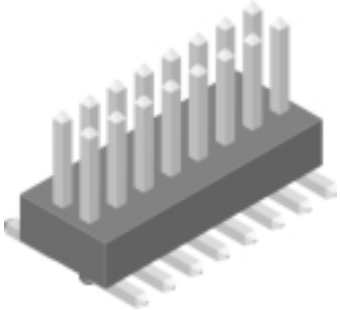

SUGGESTED MATING CONNECTOR
98XXS-AX-XX-XX (PAGE F-03)

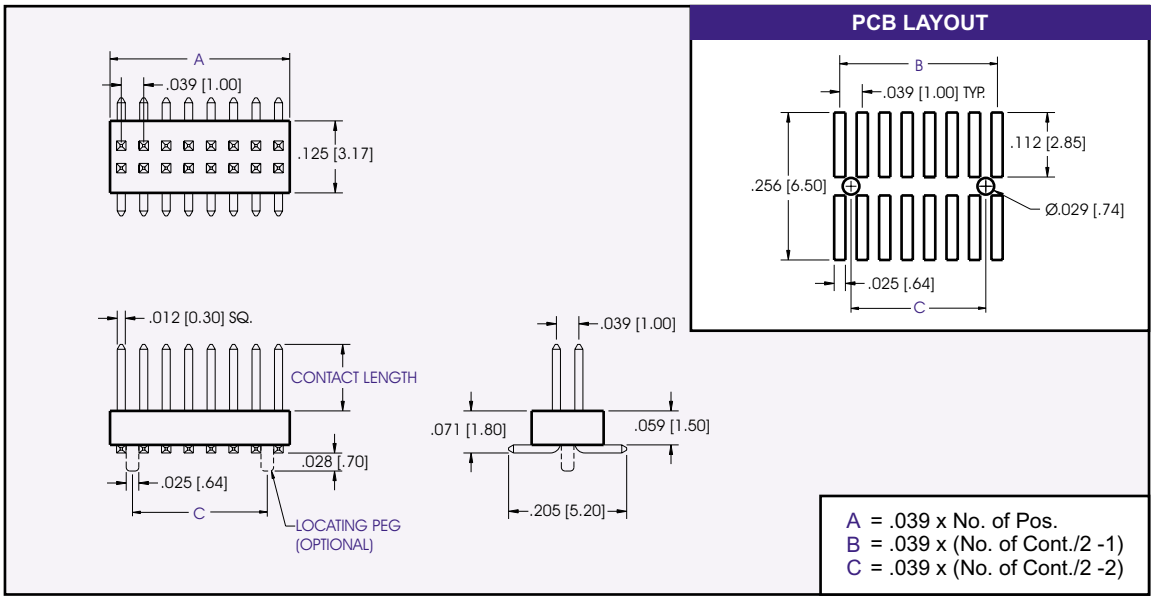

DIMENSIONS ARE IN INCHES & [MM]

PART NUMBERING

98 XX — A X — XX — XX — XX

SERIES CODE
.039 HEADERS

NO. OF CONTACTS
06 - 98
100 = 01

LOCATING PEG
1 = WITH LOCATING PEG
0 = WITHOUT LOCATING PEG

CONTACT LENGTH OPTIONS
01 = .075 [1.90]
CONSULT FACTORY FOR OTHER CONTACT LENGTH OPTIONS

CONTACT PLATING
.000050" Nickel underplate

CONTACT	TAIL
03 = Au Flash	Au Flash
85 =15µ"Au	15µ"Au
90 =30µ"Au	30µ"Au

PACKAGING
TR = TAPE & REEL PACKAGING
PP = PICK AND PLACE PAD
BLANK = STANDARD PACKAGING
CONSULT FACTORY FOR TR AND PP PACKAGING AVAILABILITY

9800 Series Headers
.039 [1.00] SMT Box Header

Specifications

Insulator Material: LCP 94V-0 UL Recognized.
Contact Material: Copper Alloy
Contact Plating: Gold over .000050" Ni
(See contact plating options)
Insulation Resistance: 5000 M ohms min.
Dielectric Withstand Voltage: 500 VAC
Current Rating: 1 AMP
Operating Temperature: -40°C To +105°C
UL File Numbers: E146967 & E176234

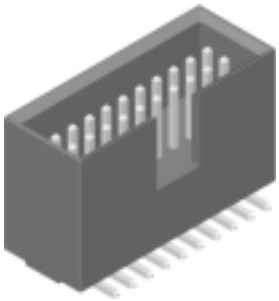

SUGGESTED MATING CONNECTOR
98XXS-BX-01-XX (PAGE F-04)

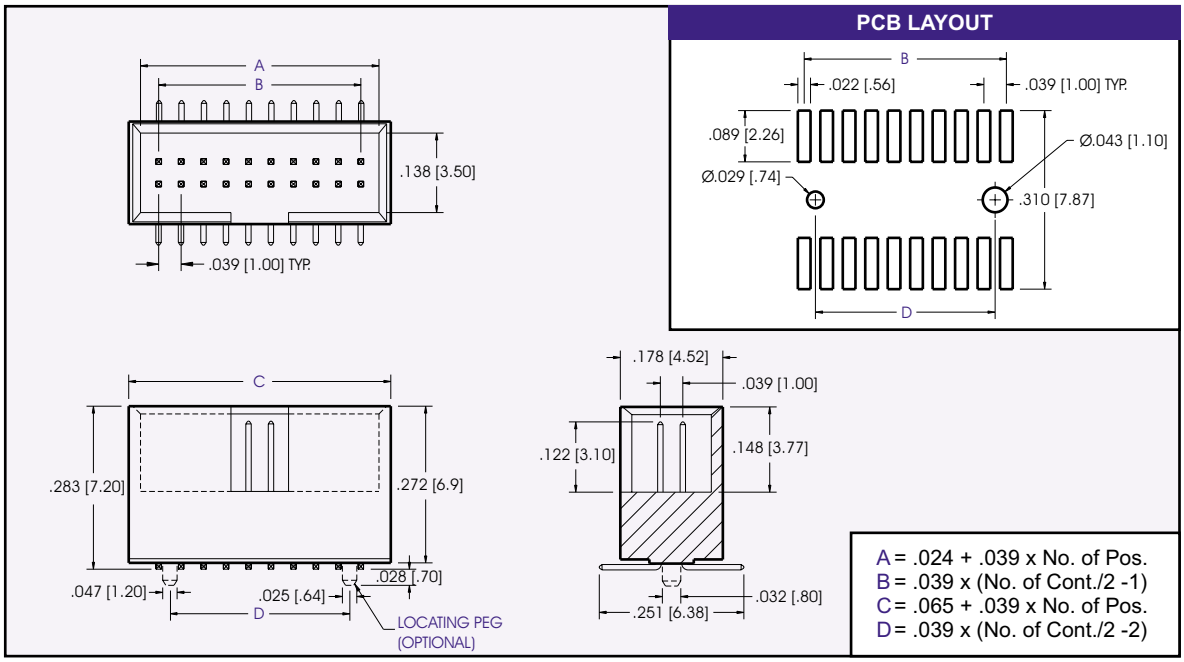

A = .024 + .039 x No. of Pos.
B = .039 x (No. of Cont./2 -1)
C = .065 + .039 x No. of Pos.
D = .039 x (No. of Cont./2 -2)

DIMENSIONS ARE IN INCHES & [MM]

PART NUMBERING

98 | XX — B | X — 01 — XX — XX

SERIES CODE
.039 HEADERS

NO. OF CONTACTS
06 - 60

LOCATING PEG
1 = WITH LOCATING PEG
0 = WITHOUT LOCATING PEG

CONTACT PLATING
.000050" Nickel underplate

	MATING	TAIL
03	Au Flash	Au Flash
85	15µ"Au	15µ"Au
90	15µ"Au	15µ"Au

PACKAGING
TR = TAPE & REEL PACKAGING
PP = PICK AND PLACE PAD
BLANK = STANDARD PACKAGING
CONSULT FACTORY FOR TR AND PP PACKAGING AVAILABILITY

9800S Series Sockets
.039 [1.00] SMT Strip Socket

Specifications

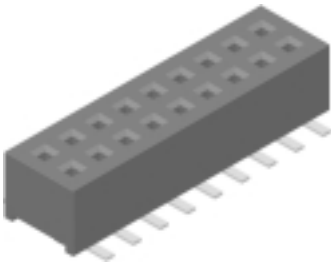

Insulator Material: LCP 94V-O UL Recognized.
Contact Material: Phosphor Bronze
Contact Plating: Gold over .000050" Ni
(See contact plating options).
Insulation Resistance: 5000 M ohms min.
Dielectric Withstand Voltage: 500 VAC
Current Rating: 1 AMP
Operating Temperature: -40°C To +105°C
Contact Resistance: 20 m ohms max.
Max. Processing Temp.: 230°C for 60 seconds
UL File Numbers: E146967 & E176234

SUGGESTED MATING CONNECTOR
98XX-AX-01-XX (PAGE F-01)

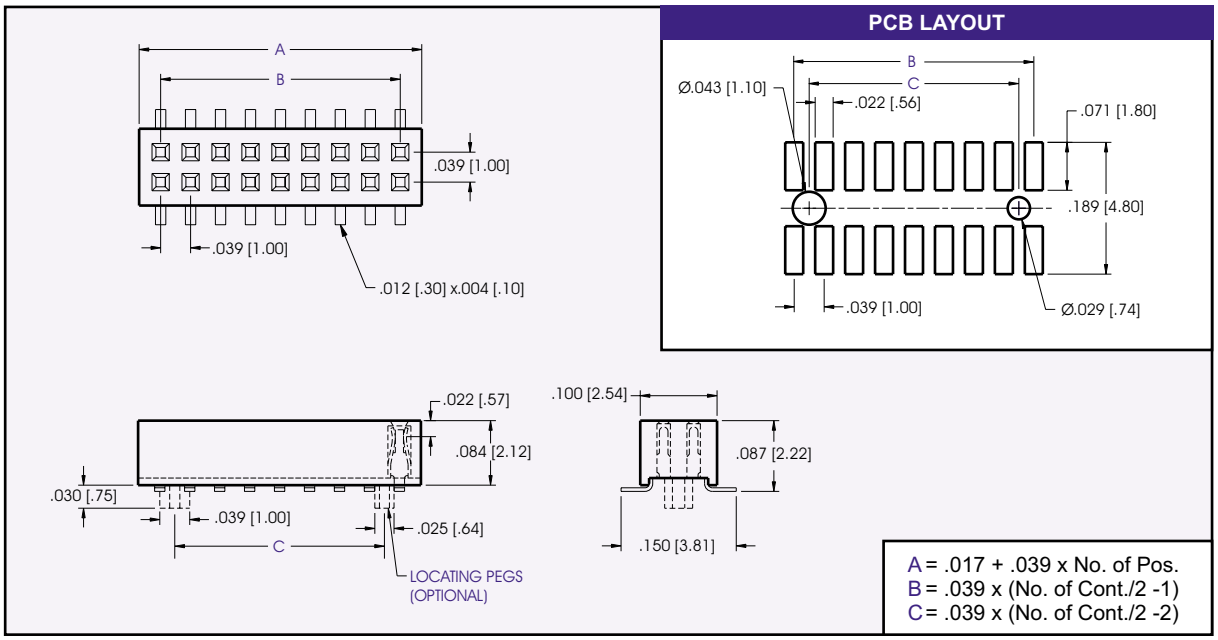

DIMENSIONS ARE IN INCHES & [MM]

PART NUMBERING

98 XX S — A X — 01 — XX — XX

SERIES CODE
.039 SOCKET

NO. OF CONTACTS
06 - 60
100 = 01

LOCATING PEG
1 = WITH LOCATING PEG
0 = WITHOUT LOCATING PEG

CONTACT PLATING
.000050" Nickel underplate

	MATING	TAIL
03	= Au Flash	Au Flash
85	= 15µ"Au	15µ"Au
90	= 30µ"Au	30µ"Au

PACKAGING
TR = TAPE & REEL PACKAGING
PP = PICK AND PLACE PAD
BLANK = STANDARD PACKAGING
CONSULT FACTORY FOR TR AND PP PACKAGING AVAILABILITY

9800S Series Sockets
.039 [1.00] SMT Box Socket

Specifications

Insulator Material: LCP 94V-O UL Recognized.
Contact Material: Phosphor Bronze
Contact Plating: Gold over .000050" Ni
(See contact plating thicknesses).
Insulation Resistance: 5000 M ohms min.
Dielectric Withstand Voltage: 500 VAC
Current Rating: 1 AMP
Operating Temperature: -40°C To +105°C
Contact Resistance: 20 m ohms max.
Max. Processing Temp.: 230°C for 60 seconds
UL File Numbers: E146967 & E176234

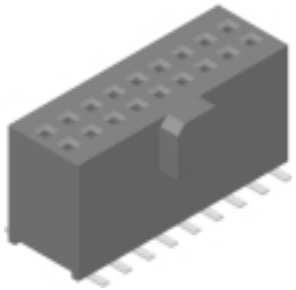

SUGGESTED MATING CONNECTOR
98XX-BX-XX-XX (PAGE F-02)

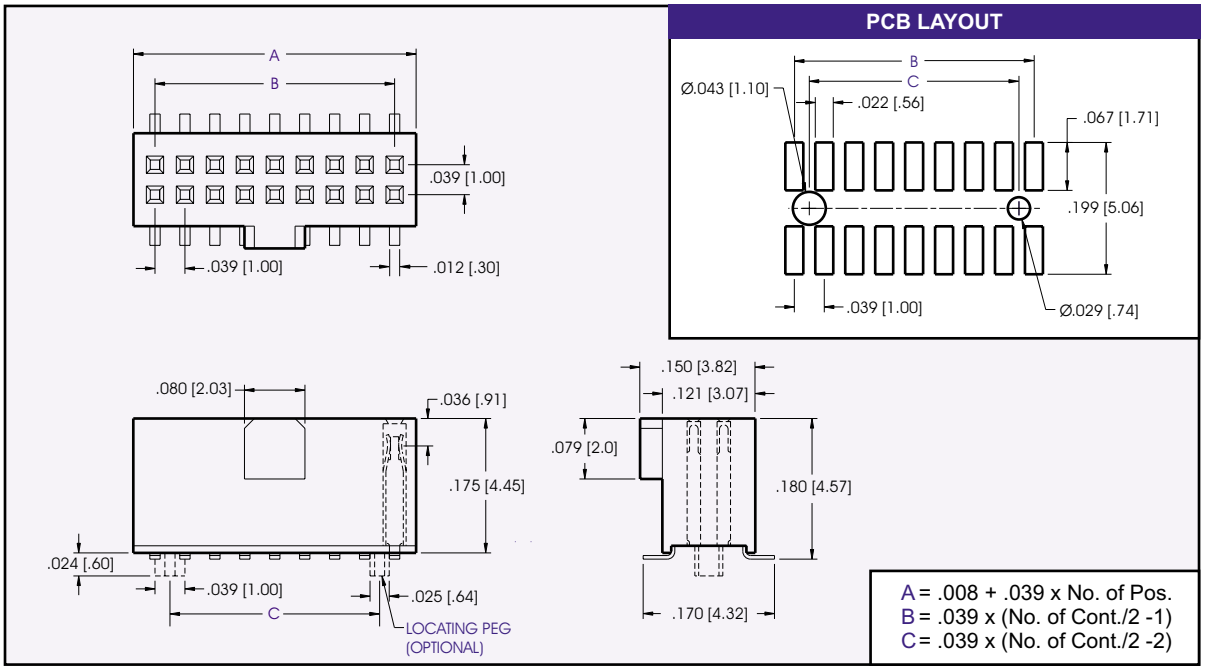

DIMENSIONS ARE IN INCHES & [MM]

PART NUMBERING

98 XX S — B X — 01 — XX — XX

SERIES CODE
.039 SOCKET

NO. OF CONTACTS
06 - 60

LOCATING PEG
1 = WITH LOCATING PEG
0 = WITHOUT LOCATING PEG

CONTACT PLATING
.000050" Nickel underplate

	MATING	TAIL
03	Au Flash	Au Flash
85	15µ"Au	15µ"Au
90	30µ"Au	30µ"Au

PACKAGING
TR = TAPE & REEL PACKAGING
PP = PICK AND PLACE PAD
BLANK = STANDARD PACKAGING
CONSULT FACTORY FOR TR AND PP PACKAGING AVAILABILITY

CONSULT FACTORY FOR CUSTOM CONNECTORS BUILT TO YOUR SPECIFICATION

9600 Series Headers
.050 [1.27] Single Row

Specifications

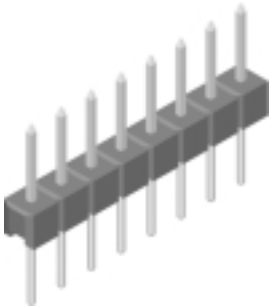

Insulator Material: Glass filled polyester, Thermoplastic, 94V-O Nylon-6T, UL Recognized.
Contact Material: Copper Alloy
Contact Plating: Gold and/or Tin over .000050" Ni (See contact plating options).
Insulation Resistance: 5000 M ohms min.
Dielectric Withstand Voltage: 500 VAC
Current Rating: 1 AMP
Operating Temperature: -40°C To +105°C
Max. Processing Temp.: 230°C for 60 seconds
UL File Numbers: E146967 & E176234

SUGGESTED MATING CONNECTORS
96XXS-A1-XX-XX (PAGE F-16)
96XXS-B1-XX-XX (PAGE F-17)
96XXS-C1-01-XX (PAGE F-18)

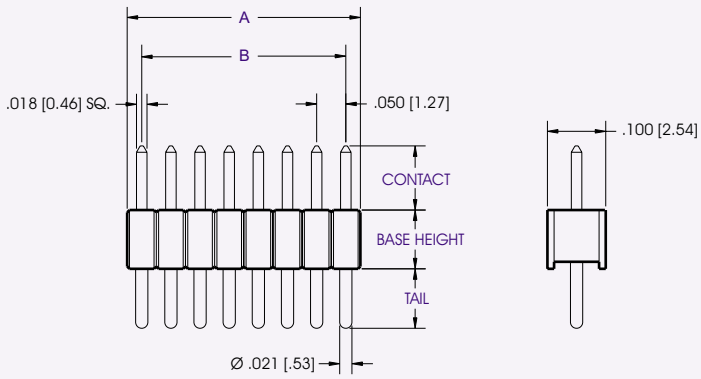

PCB LAYOUT

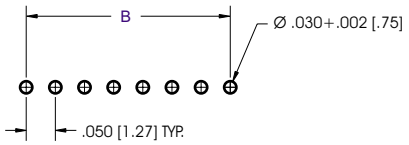

A = .050 x No. of Pos. ±.020
B = .050 x (No. of Cont. -1)

DIMENSIONS ARE IN INCHES [MM]

PART NUMBERING

96 | XX — A | X — XX — XX

SERIES CODE
.050 HEADERS

NO. OF CONTACTS
03 - 32

BASE HEIGHT
1 = .100 [2.54]
2 = .118 [3.00]
3 = .067 [1.70]
4 = .134 [3.40]
5 = .156 [3.95]
6 = .079 [2.00]

PIN LENGTH OPTIONS

	CONTACT	TAIL
01 =	.110 [2.80]	.102 [2.60]
	(MATES W/ 96XXS-AX-XX-XX & 96XXS-C1-01-XX)	
02 =	.236 [6.00]	.102 [2.60]
	(MATES W/ 96XXS-BX-XX-XX)	

CONSULT FACTORY FOR OTHER PIN LENGTH OPTIONS

CONTACT PLATING
.000050" Nickel underplate

	CONTACT	TAIL
00 =	100µ"Sn	100µ"Sn
01 =	Au Flash	100µ"Sn
03 =	Au Flash	Au Flash
10 =	10µ"Au	100µ"Sn
30 =	30µ"Au	100µ"Sn

CONSULT FACTORY FOR CONNECTORS BUILT TO YOUR SPECIFICATION

9600 Series Headers
.050 [1.27] Single Row SMT

Specifications

Insulator Material: Glass filled polyester, Thermoplastic, 94V-O Nylon-6T, UL Recognized.
Contact Material: Copper Alloy
Contact Plating: Gold or Tin over .000050" Ni (See contact plating options).
Insulation Resistance: 5000 M ohms min.
Dielectric Withstand Voltage: 500 VAC
Current Rating: 1 AMP
Operating Temperature: -40°C To +105°C
Max. Operating Temp.: 230°C for 60 seconds
UL File Numbers: E146967 & E176234

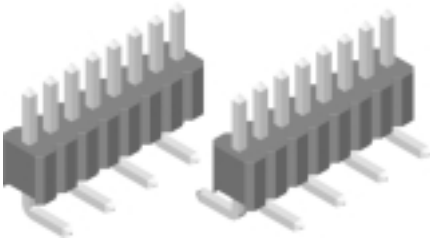

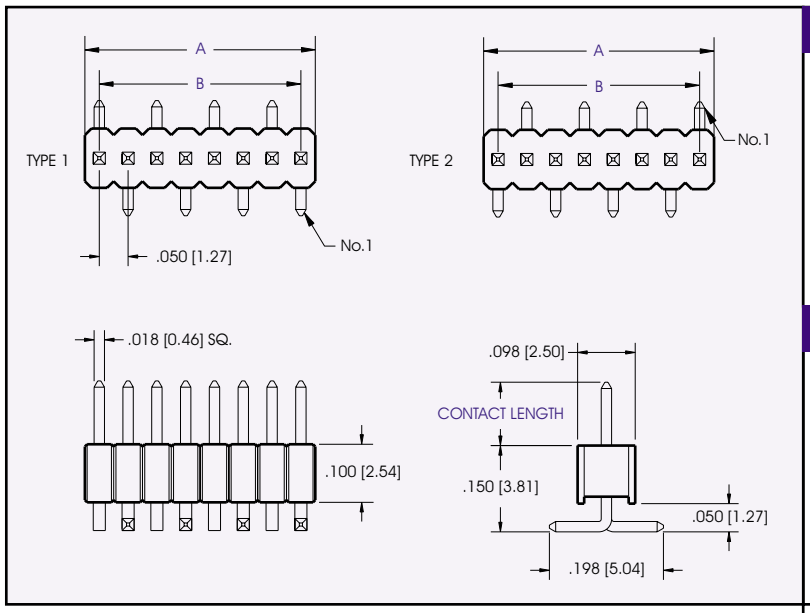

ALL DIMENSIONS ARE IN INCHES & [MM]

TYPE 1 PCB LAYOUT

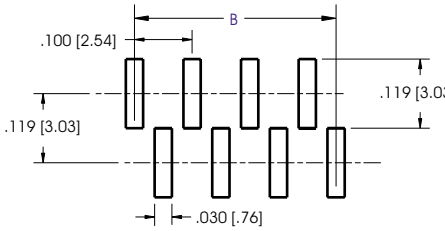

TYPE 2 PCB LAYOUT

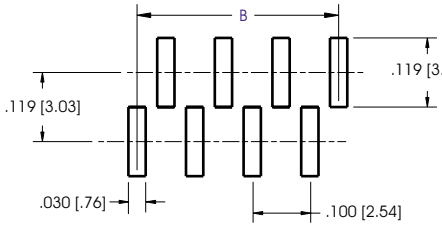

A = .050 x No. of Pos. ±.020
B = .050 x (No. of Cont. -1)

SUGGESTED MATING CONNECTORS

96XXS-A1-XX-XX (PAGE F-16)
96XXS-B1-XX-XX (PAGE F-17)
96XXS-C1-01-XX (PAGE F-18)

PART NUMBERING

96 | XX — B | X — XX — XX — XX

SERIES CODE
.050 HEADERS

NO. OF CONTACTS
03 - 32

CONTACT ORIENTATION
1 = TYPE 1
2 = TYPE 2

CONTACT LENGTH
01 = .110 [2.80] (MATES W/ 96XXS-A1-XX-XX & 96XXS-C1-01-XX)
02 = .236 [6.00] (MATES W/ 96XXS-B1-XX-XX)
CONSULT FACTORY FOR OTHER PIN LENGTH OPTIONS

CONTACT PLATING
.000050" Nickel underplate

	CONTACT	TAIL
00	= 100µ"Sn	100µ"Sn
03	= Au Flash	Au Flash
80	= 10µ"Au	10µ" Au
90	= 30µ"Au	30µ" Au

PACKAGING
TR = TAPE & REEL PACKAGING
PP = PICK AND PLACE PAD
BLANK = STANDARD PACKAGING
CONSULT FACTORY FOR TR AND PP PACKAGING AVAILABILITY

CONSULT FACTORY FOR CONNECTORS BUILT TO YOUR SPECIFICATION

9600 Series Headers
.050 [1.27] Stacking Header

Specifications

Insulator Material: Glass filled polyester, Thermoplastic, 94V-O Nylon-6T, UL Recognized.
Contact Material: Copper Alloy
Contact Plating: Gold and/or Tin over.000050" Ni (See contact plating options).
Insulation Resistance: 5000 M ohms min.
Dielectric Withstand Voltage: 500 VAC
Current Rating: 1 AMP
Operating Temperature: -40°C To +105°C
Max. Processing Temp.: 230°C for 60 seconds
UL File Numbers: E146967 & E176234

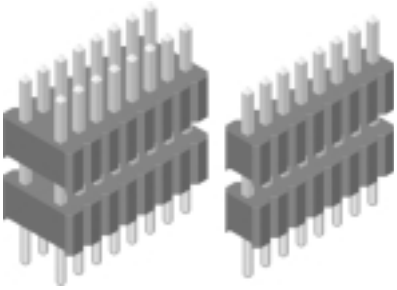

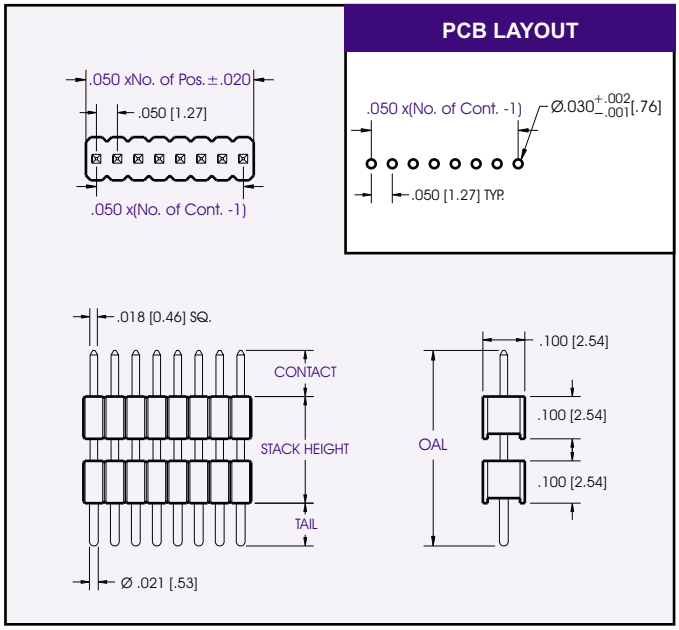

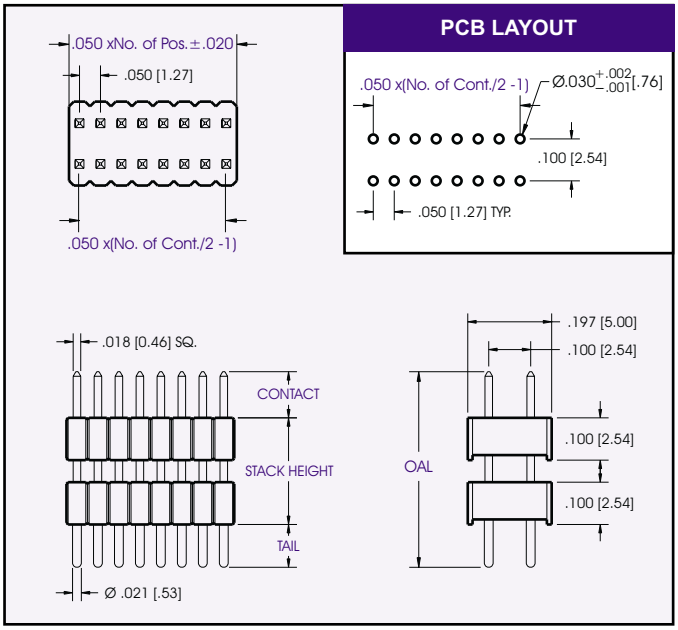

ALL DIMENSIONS ARE IN INCHES & [MM]

SUGGESTED MATING CONNECTORS

SINGLE ROW: 96XXS-A1-XX-XX (PAGE F-16)
96XXS-B1-XX-XX (PAGE F-17)
DOUBLE ROW: 96XXS-A2-XX-XX (PAGE F-16)
96XXS-B2-XX-XX (PAGE F-17)

PART NUMBERING

96 | XX — C | X — XX — XX — XXXX

SERIES CODE
.050 HEADERS

NO. OF CONTACTS
SINGLE ROW = 03 - 32
DOUBLE ROW = 06 - 98

NO. OF ROWS
1 = SINGLE ROW
2 = DOUBLE ROW

TAIL OPTIONS

	CONTACT	TAIL
01 =	.110 [2.80]	.102 [2.60]
	(MATES W/ 96XXS-AX-XX-XX)	
02 =	.236 [6.00]	.102 [2.60]
	(MATES W/ 96XXS-BX-XX-XX)	

CONSULT FACTORY FOR OTHER PIN LENGTH OPTIONS

CONTACT PLATING
.000050" Nickel underplate

	CONTACT	TAIL
00 =	100µ"Sn	100µ"Sn
01 =	Au Flash	100µ"Sn
03 =	Au Flash	Au Flash
10 =	10µ"Au	100µ"Sn
30 =	30µ"Au	100µ"Sn

STACK HEIGHT
EX:
0.600 = 0600
1.200 = 1200
NOTE: MAX OAL = 1.180 [30mm]

CONSULT FACTORY FOR CONNECTORS BUILT TO YOUR SPECIFICATION

9600 Series Headers
.050 x .050 Low Profile

Specifications

Insulator Material: Glass filled polyester, Thermoplastic, 94V-O Nylon-6T, UL Recognized.
Contact Material: Copper Alloy
Contact Plating: Gold or Tin over .000050" Ni (See contact plating options).
Insulation Resistance: 5000 M ohms min.
Dielectric Withstand Voltage: 500 VAC
Current Rating: 1 AMP
Operating Temperature: -40°C To +105°C
Max. Processing Temp.: 230°C for 60 seconds
UL File Numbers: E146967 & E176234

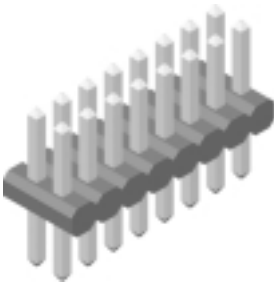

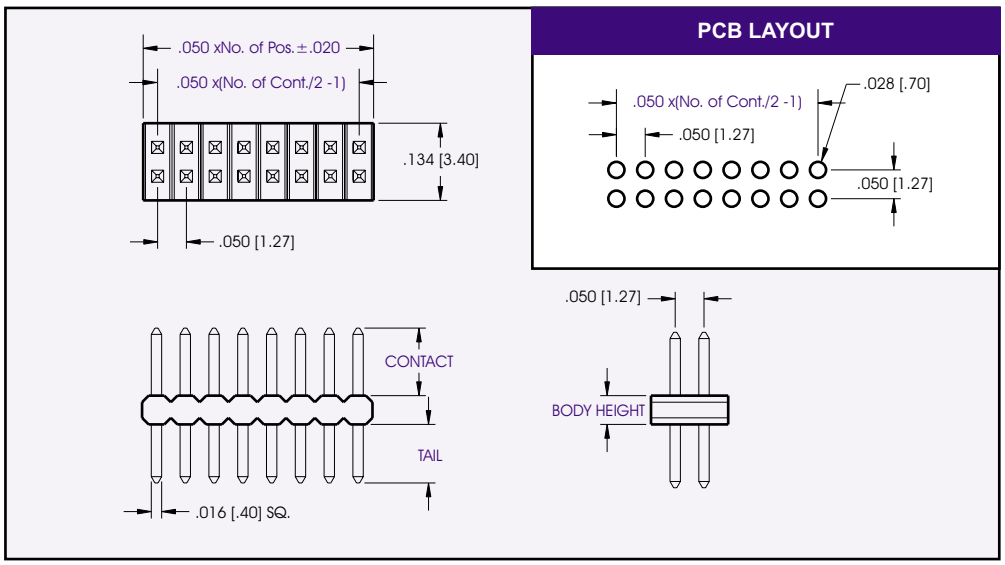

ALL DIMENSIONS ARE IN INCHES & [MM]

PART NUMBERING

96 XX — D X — XX — XX

SERIES CODE
.050 HEADERS

NO. OF CONTACTS
06 - 98
100 = 01

BODY HEIGHT
1 = .039 [1.00]
2 = .059 [1.50]
3 = .079 [2.00]

TAIL OPTIONS

	CONTACT	TAIL
01 =	.118 [3.00]	.090 [2.30]

CONSULT FACTORY FOR OTHER PIN LENGTH OPTIONS

CONTACT PLATING
.000050" Nickel underplate

	CONTACT	TAIL
00 =	100µ"Sn	100µ"Sn
03 =	Au Flash	Au Flash
80 =	10µ"Au	10µ"Au
90 =	30µ"Au	30µ"Au

SUGGESTED MATING CONNECTORS

96XXS-DX-XX-XX (PAGE F-19)
96XXS-EX-XX-XX (PAGE F-20)

CONSULT FACTORY FOR CONNECTORS BUILT TO YOUR SPECIFICATION

9600 Series Headers
.050 x .050 Dual Row

Specifications

Insulator Material: Glass filled polyester, Thermoplastic, 94V-O Nylon-6T, UL Recognized.
Contact Material: Copper Alloy
Contact Plating: Gold and/or Tin over .000050" Ni (See contact plating options).
Insulation Resistance: 5000 M ohms min.
Dielectric Withstand Voltage: 500 VAC
Current Rating: 1 AMP
Operating Temperature: -40°C To +105°C
Max Processing Temp.: 230°C for 30 seconds
UL File Numbers: E146967 & E176234

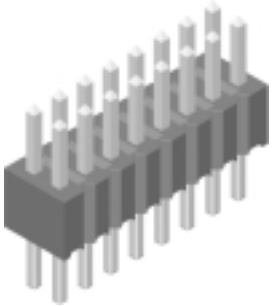

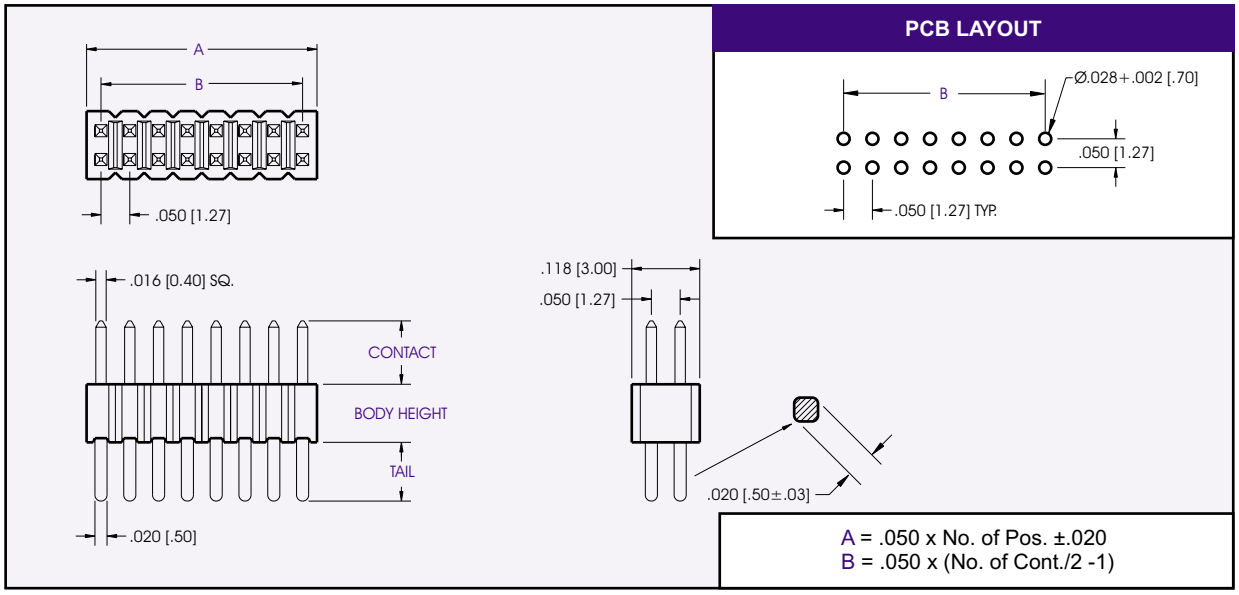

ALL DIMENSIONS ARE IN INCHES & [MM]

PART NUMBERING

96 XX — E X — XX — XX

SERIES CODE
.050 HEADERS

NO. OF CONTACTS
06 - 98
100 = 01

BODY HEIGHT
1 = .098 [2.50]
2 = .114 [2.90]
3 = .067 [1.70]

CONTACT OPTIONS

	CONTACT	TAIL
01 =	.118 [3.00]	.102 [2.60]

CONSULT FACTORY FOR OTHER PIN LENGTH OPTIONS

CONTACT PLATING
.000050" Nickel underplate

	CONTACT	TAIL
00 =	100µ"Sn	100µ"Sn
01 =	Au Flash	100µ"Sn
03 =	Au Flash	Au Flash
10 =	10µ"Au	100µ"Sn
30 =	30µ"Au	100µ"Sn

SUGGESTED MATING CONNECTORS

96XXS-DX-XX-XX (PAGE F-19)
96XXS-EX-XX-XX (PAGE F-20)

CONSULT FACTORY FOR CONNECTORS BUILT TO YOUR SPECIFICATION

ELECTRONIC CONNECTOR SERVICE INC. 11880 WESTERN AVE. STANTON, CA 90680 TOLL FREE (877) ECS-CONN TEL (714) 895-6351 FAX (714) 894-1858
WWW.ECSCONN.COM

9600 Series Headers
.050 x .050 SMT Header

Specifications

Insulator Material: Glass filled polyester, Thermoplastic, 94V-O Nylon-6T, UL Recognized.
Contact Material: Copper Alloy
Contact Plating: Gold or Tin over .000050" Ni (See contact plating options).
Insulation Resistance: 5000 M ohms min.
Dielectric Withstand Voltage: 500 VAC
Current Rating: 1 AMP
Operating Temperature: -40°C To +105°C
Max Processing Temp.: 230°C for 60 seconds
UL File Numbers: E146967 & E176234

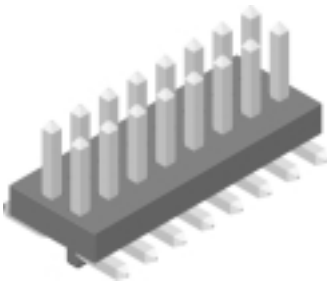

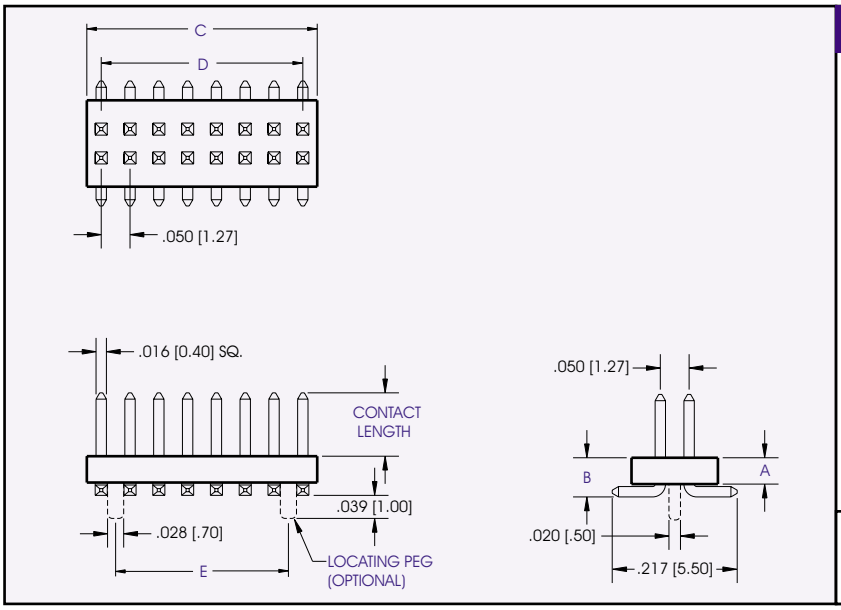

PCB LAYOUT

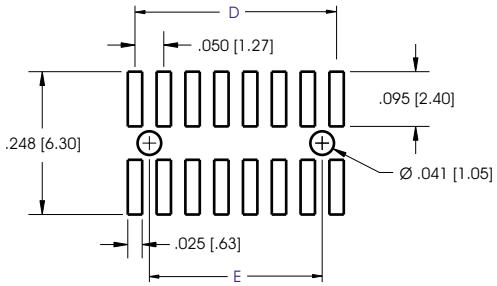

C = .050 x No. of Pos. ±.020
D = .050 x (No. of Cont./2 -1)
E = .050 x (No. of Cont./2 -2)

DIMENSIONS ARE IN INCHES & [MM]

SUGGESTED MATING CONNECTORS

96XXS-DX-XX-XX-XX (PAGE F-19)
96XXS-EX-XX-XX-XX (PAGE F-20)

PART NUMBERING

96 | XX — F | X — XX — XX — X | XX

SERIES CODE
.050 HEADERS

NO. OF CONTACTS
06 - 98
100 = 01

BODY STYLE

	A	B
1 =	.039 [1.00]	.059 [1.50]
2 =	.059 [1.50]	.079 [2.00]
3 =	.079 [2.00]	.098 [2.50]

CONTACT LENGTH
01 = .118 [3.00]
02 = .157 [4.00]
03 = .197 [5.00]
CONSULT FACTORY FOR OTHER CONTACT LENGTH OPTIONS

CONTACT PLATING
.000050" Nickel underplate

	CONTACT	TAIL
00 =	100µ"Sn	100µ"Sn
03 =	Au Flash	Au Flash
80 =	15µ"Au	15 µ"Au
90 =	30µ"Au	30 µ"Au

LOCATING PEG
BLANK = WITHOUT PEG
1 = WITH PEG

PACKAGING
TR = TAPE & REEL PACKAGING
PP = PICK AND PLACE PAD
BLANK = STANDARD PACKAGING
CONSULT FACTORY FOR TR AND PP PACKAGING AVAILABILITY

CONSULT FACTORY FOR CONNECTORS BUILT TO YOUR SPECIFICATION

9600 Series Headers
.050 x .050 Right Angle

Specifications

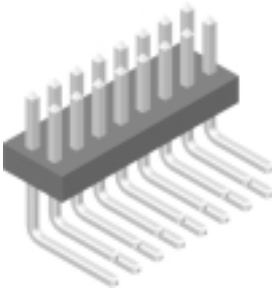

Insulator Material: Glass filled polyester, Thermoplastic, 94V-O Nylon-6T, UL Recognized.
Contact Material: Copper Alloy
Contact Plating: Gold and/or Tin over .000050" Ni (See contact plating options).
Insulation Resistance: 5000 M ohms min.
Dielectric Withstand Voltage: 500 VAC
Current Rating: 1 AMP
Operating Temperature: -40°C To +105°C
Max Processing Temp.: 230°C for 60 seconds
UL File Numbers: E146967 & E176234

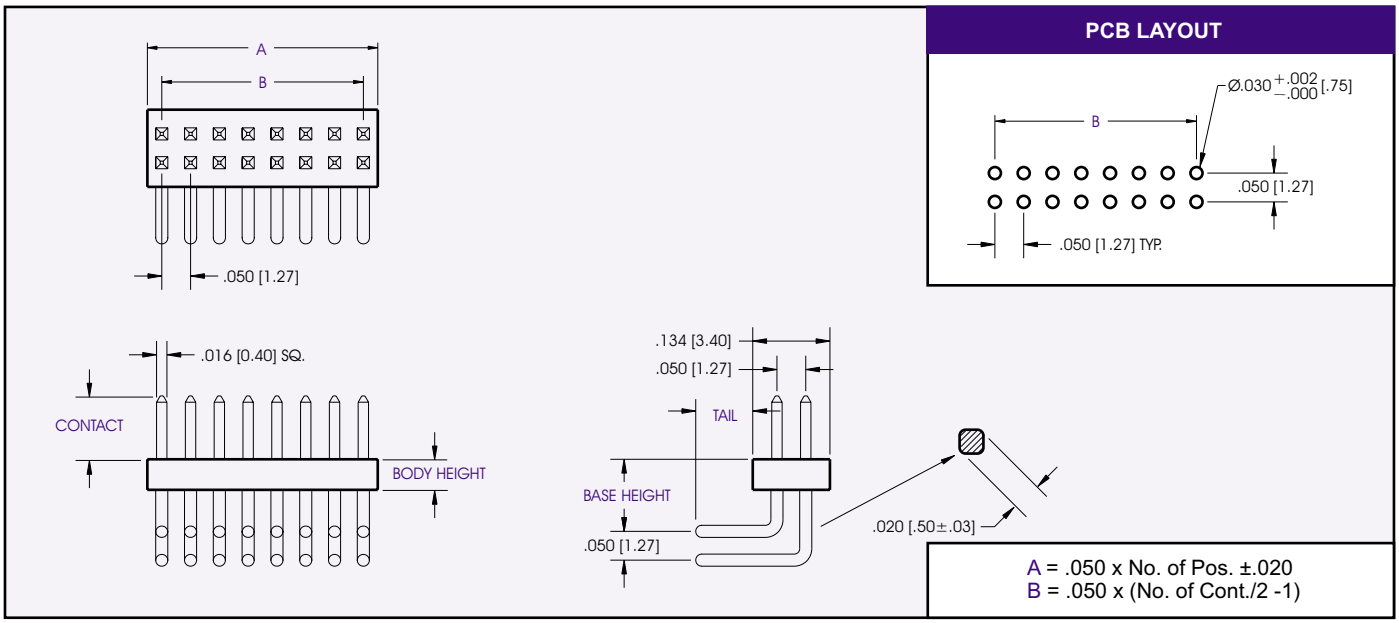

DIMENSIONS ARE IN INCHES & [MM]

SUGGESTED MATING CONNECTORS

96XXS-DX-XX-XX-XX (PAGE F-19)
96XXS-EX-XX-XX-XX (PAGE F-20)

PART NUMBERING

96 XX — G X — XX — XX

SERIES CODE
.050 HEADERS

NO. OF CONTACTS
06 - 98
100 = 01

BODY HEIGHT
1 = .106 [2.70] - BASE HEIGHT = .122 [3.1]
2 = .067 [1.70] - BASE HEIGHT = .130 [3.3]

CONTACT LENGTH

	CONTACT	TAIL
01 =	.150 [3.80]	.118 [3.00]

CONSULT FACTORY FOR OTHER CONTACT LENGTH OPTIONS

CONTACT PLATING
.000050" Nickel underplate

	CONTACT	TAIL
00 =	100µ"Sn	100µ"Sn
01 =	Au Flash	100µ"Sn
03 =	Au Flash	Au Flash
10 =	10µ"Au	100µ"Sn
30 =	30µ"Au	100µ"Sn

CONSULT FACTORY FOR CONNECTORS BUILT TO YOUR SPECIFICATION

9600 Series Headers
.050 x .050 Stacking SMT Header

Specifications

Insulator Material: Glass filled polyester, Thermoplastic, 94V-O Nylon-6T, UL Recognized.
Contact Material: Copper Alloy
Contact Plating: Gold or Tin over .000050" Ni (See contact plating options).
Insulation Resistance: 5000 M ohms min.
Dielectric Withstand Voltage: 500 VAC
Current Rating: 1 AMP
Operating Temperature: -40°C To +105°C
Max. Operating Temp.: 230°C for 60 seconds
UL File Numbers: E146967 & E176234

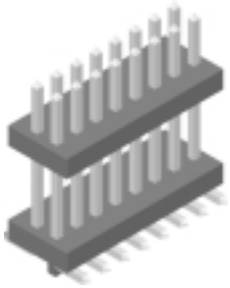

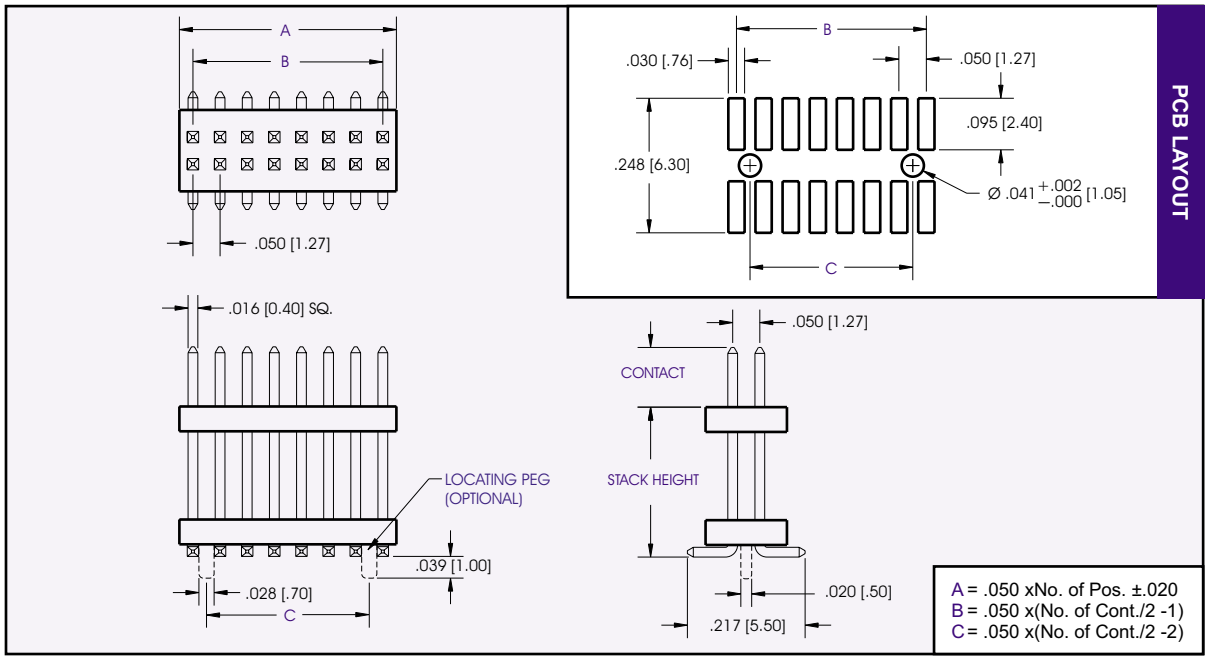

ALL DIMENSIONS ARE IN INCHES & [MM]

PART NUMBERING

96 XX — H X — XXX — XX — XXXX — XX

SERIES CODE
.050 HEADERS

NO. OF CONTACTS
06 - 98
100 = 01

LOCATING PEG
1 = WITH LOCATING PEG
2 = WITHOUT LOCATING PEG

CONTACT LENGTH
Ex.: 120 = .120 [3.05]

CONTACT PLATING
.000050" Nickel underplate

	CONTACT	TAIL
00 =	100µ"Sn	100µ"Sn
03 =	Flash Au	Flash Au
80 =	10µ"Au	10µ"Au
90 =	30µ"Au	30µ"Au

STACK HEIGHT
Ex.
0.600 = 0600
1.200 = 1200

PACKAGING
TR = TAPE & REEL PACKAGING
PP = PICK AND PLACE PAD
BLANK = STANDARD PACKAGING
CONSULT FACTORY FOR TR AND PP PACKAGING AVAILABILITY

SUGGESTED MATING CONNECTORS

96XXS-DX-XX-XX-XX (PAGE F-19)
96XXS-EX-XX-XX-XX (PAGE F-20)

CONSULT FACTORY FOR CONNECTORS BUILT TO YOUR SPECIFICATION

9600 Series Headers
.050 x.050 Box Headers

Specifications

Insulator Material: Glass filled polyester, Thermoplastic, 94V-O Nylon-6T, UL Recognized.
Contact Material: Copper Alloy
Contact Plating: Gold or Tin over .000050" Ni (See contact plating options).
Insulation Resistance: 5000 M ohms min.
Dielectric Withstand Voltage: 500 VAC
Current Rating: 1 AMP
Operating Temperature: -40°C To +105°C
Max Operating Temp: 230°C for 60 seconds
UL File Numbers: E146967 & E176234

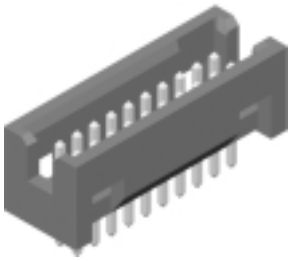

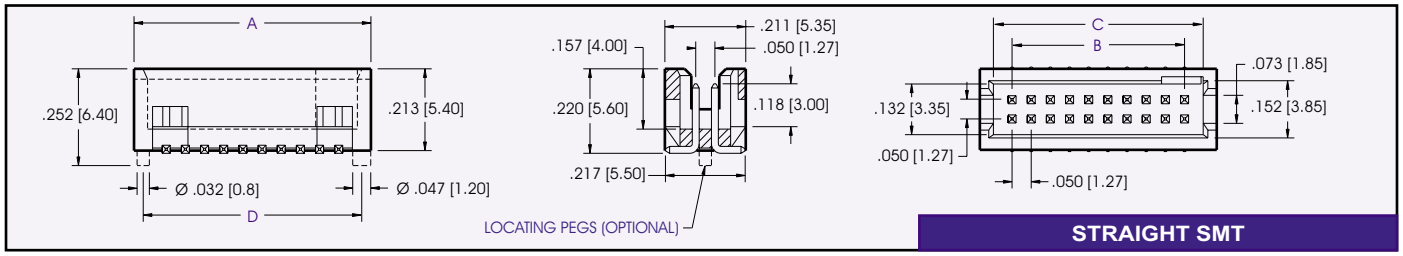

STRAIGHT SMT

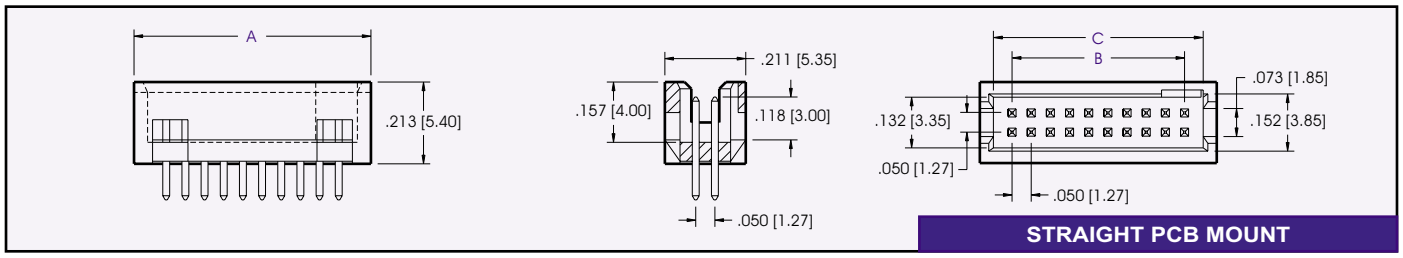

STRAIGHT PCB MOUNT

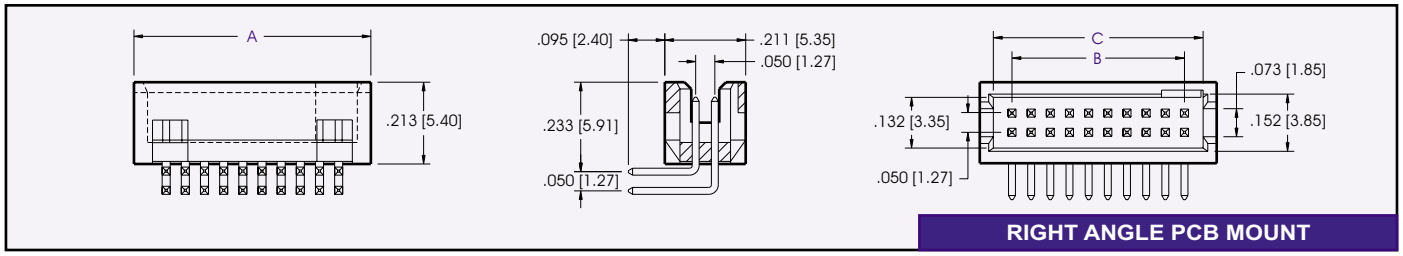

RIGHT ANGLE PCB MOUNT

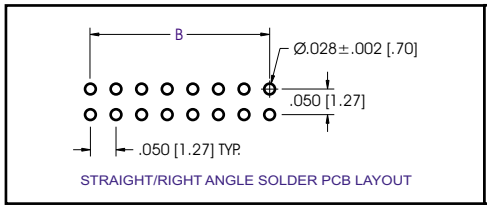

STRAIGHT/RIGHT ANGLE SOLDER PCB LAYOUT

A = .118 + .050 x No. of Pos.
B = .050 x (No. of Cont./2 -1)
C = .074 + .050 x (No. of Cont./2 -1)
D = .120 + .050 x (No. of Cont./2 -1)

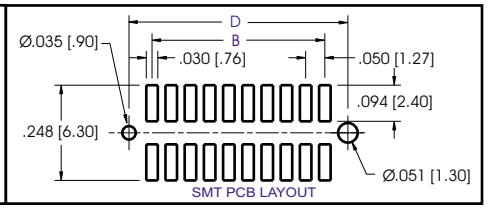

SMT PCB LAYOUT

PART NUMBERING

96 XX — I X — 00 — XX — XX

SERIES CODE
.050 HEADERS

NO. OF CONTACTS
06 - 98
100 = 01

BODY STYLE
1 = STRAIGHT
2 = RIGHT ANGLE
3 = SMT WITHOUT PEGS
4 = SMT WITH PEGS

CONTACT PLATING
.000050" Nickel underplate

	CONTACT	TAIL
03	Au Flash	Au Flash
80	10µ"Au	10µ"Au
90	30µ"Au	30µ"Au

PACKAGING
TR = TAPE & REEL PACKAGING
PP = PICK AND PLACE PAD
BLANK = STANDARD PACKAGING
CONSULT FACTORY FOR TR AND PP PACKAGING AVAILABILITY

SUGGESTED MATING CONNECTORS

96XXS-DX-XX-XX-XX (PAGE F-19)
96XXS-EX-XX-XX-XX (PAGE F-20)

CONSULT FACTORY FOR CONNECTORS BUILT TO YOUR SPECIFICATION

9600 Series Headers
.050 [1.27] x .100 [2.54]

Specifications

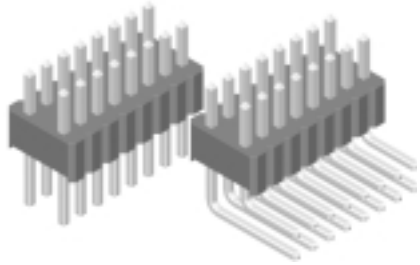

Insulator Material: Glass filled polyester, Thermoplastic, 94V-O Nylon-6T, UL Recognized.
Contact Material: Copper Alloy
Contact Plating: Gold and/or Tin over .000050" Ni (See contact plating thicknesses).
Insulation Resistance: 5000 M ohms min.
Dielectric Withstand Voltage: VAC 500
Current Rating: 1 AMP
Operating Temperature: -40°C To +105°C
Max Processing Temp: 230°C for 30 seconds
UL File Numbers: E146967 & E176234

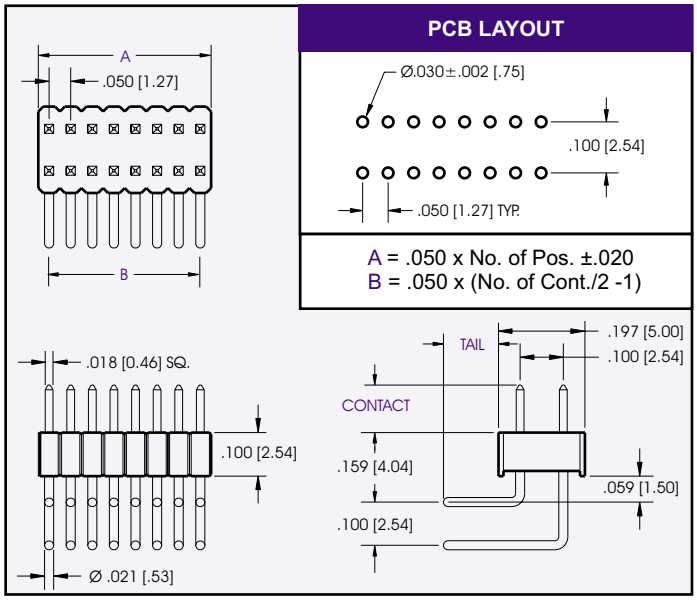

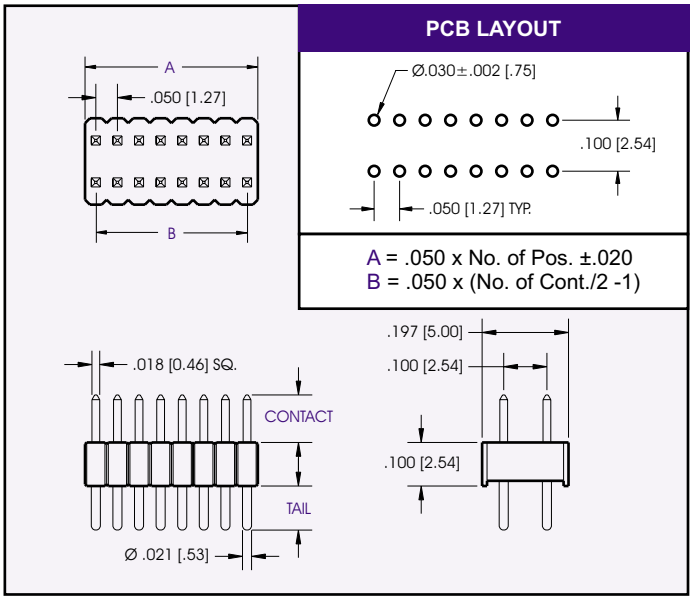

DIMENSIONS ARE IN INCHES & [MM]

PART NUMBERING

96 XX — J X — XX — XX

SERIES CODE
.050 HEADERS

NO. OF CONTACTS
06 - 98
100 = 01

TAIL STYLE
1 = STRAIGHT
2 = RIGHT ANGLE

CONTACT PLATING
.000050" Nickel underplate

	CONTACT	TAIL
00	= 100µ"Sn	100µ"Sn
01	= Au Flash	100µ"Sn
03	= Au Flash	Au Flash
10	= 10µ"Au	100µ"Sn
30	= 30µ"Au	100µ"Sn

TAIL OPTIONS

	CONTACT	TAIL		
01	= .110 [2.80]	.102 [2.60]	STRAIGHT	(MATES W/ 96XXS-A2-XX-XX)
02	= .236 [6.00]	.118 [3.00]	STRAIGHT	(MATES W/ 96XXS-B2-XX-XX)
31	= .110 [2.80]	.079 [2.00]	R-ANGLE	(MATES W/ 96XXS-A2-XX-XX)
32	= .236 [6.00]	.079 [2.00]	R-ANGLE	(MATES W/ 96XXS-B2-XX-XX)

CONSULT FACTORY FOR OTHER CONTACT LENGTH OPTIONS

SUGGESTED MATING CONNECTORS

96XXS-A2-XX-XX (PAGE F-16)
96XXS-B2-XX-XX (PAGE F-17)

CONSULT FACTORY FOR CONNECTORS BUILT TO YOUR SPECIFICATION

ELECTRONIC CONNECTOR SERVICE INC. 11880 WESTERN AVE. STANTON, CA 90680 TOLL FREE (877) ECS-CONN TEL (714) 895-6351 FAX (714) 894-1858
WWW.ECSCONN.COM

9600 Series Headers
.050 [1.27] x .100 [2.54] SMT

Specifications

Insulator Material: Glass filled polyester, Thermoplastic, 94V-O Nylon-6T, UL Recognized.
Contact Material: Copper Alloy
Contact Plating: Gold or Tin over .000050" Ni (See contact plating options).
Insulation Resistance: 5000 M ohms min.
Dielectric Withstand Voltage: 500 VAC
Current Rating: 1 AMP
Operating Temperature: -40°C To +105°C
Max Operating Temp: 230°C for 60 seconds
UL File Numbers: E146967 & E176234

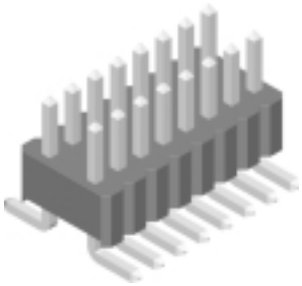

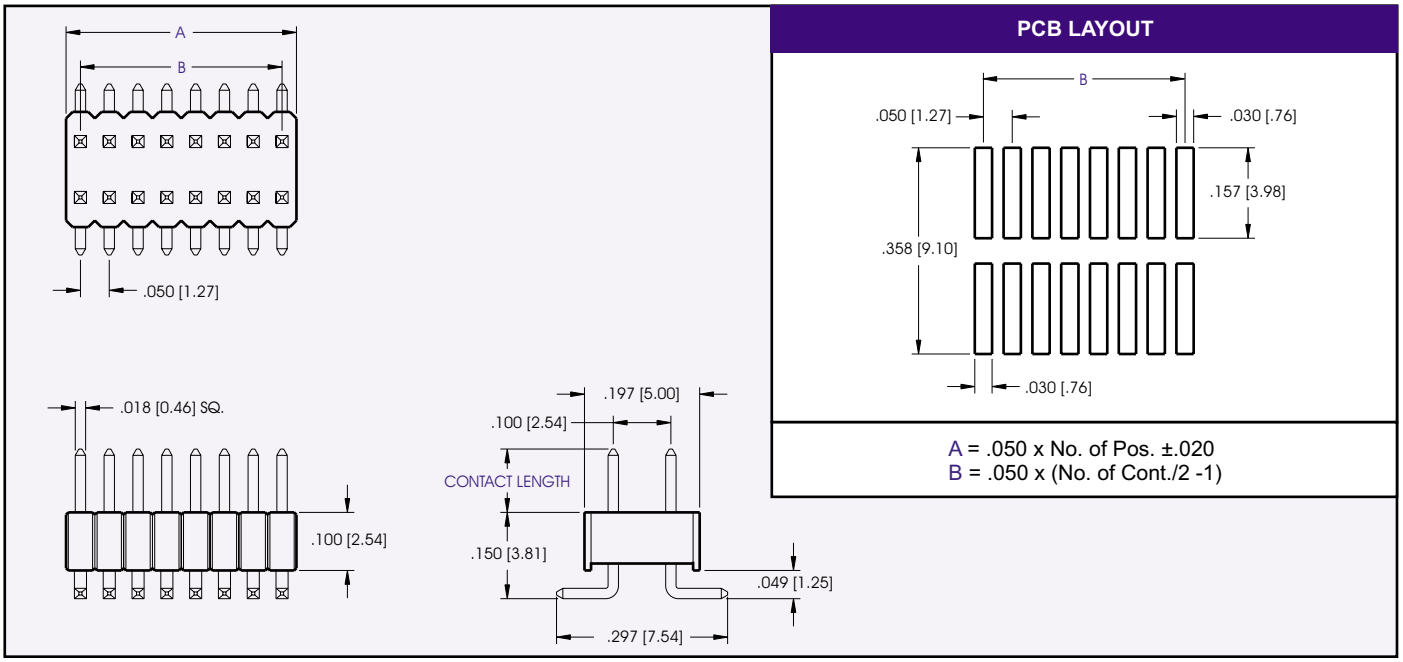

PCB LAYOUT

A = .050 x No. of Pos. ±.020
B = .050 x (No. of Cont./2 -1)

ALL DIMENSIONS ARE IN INCHES & [MM]

SUGGESTED MATING CONNECTORS

96XXS-A2-XX-XX (PAGE F-16)
96XXS-B2-XX-XX (PAGE F-17)

PART NUMBERING

96 | XX — K1 — XX — XX — XX

SERIES CODE
.050 HEADERS

NO. OF CONTACTS
06 - 98
100 = 01

CONTACT LENGTH
01 = .110 [2.80]
02 = .236 [6.00]
CONSULT FACTORY FOR OTHER CONTACT LENGTH OPTIONS

CONTACT PLATING
.000050" Nickel underplate

	CONTACT	TAIL
00	100µ"Sn	100µ"Sn
03	Au Flash	Au Flash
80	10µ"Au	10µ"Au
90	30µ"Au	30µ"Au

PACKAGING
TR = TAPE & REEL PACKAGING
PP = PICK AND PLACE PAD
BLANK = STANDARD PACKAGING
CONSULT FACTORY FOR TR AND PP PACKAGING AVAILABILITY

CONSULT FACTORY FOR CONNECTORS BUILT TO YOUR SPECIFICATION

ELECTRONIC CONNECTOR SERVICE INC. 11880 WESTERN AVE. STANTON, CA 90680 TOLL FREE (877) ECS-CONN TEL (714) 895-6351 FAX (714) 894-1858
WWW.ECSCONN.COM

9600S Series Sockets
.050 [1.27] Low Profile Socket

Specifications

Insulator Material: Glass filled polyester, Thermoplastic, 94V-O Nylon-6T, UL Recognized.
Contact Material: Phosphor Bronze
Contact Plating: Gold and/or Tin over .000050" Ni (See contact plating options)
Insulation Resistance: 5000 M ohms min.
Contact Resistance: 20 m ohms max.
Dielectric Withstand Voltage: 500 VAC
Current Rating: 1 AMP
Operating Temperature: -40°C To +105°C
Max Operating Temp.: 230°C for 60 seconds
UL File Numbers: E146967 & E176234

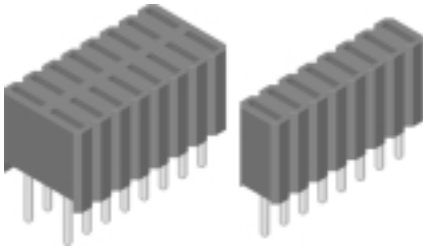

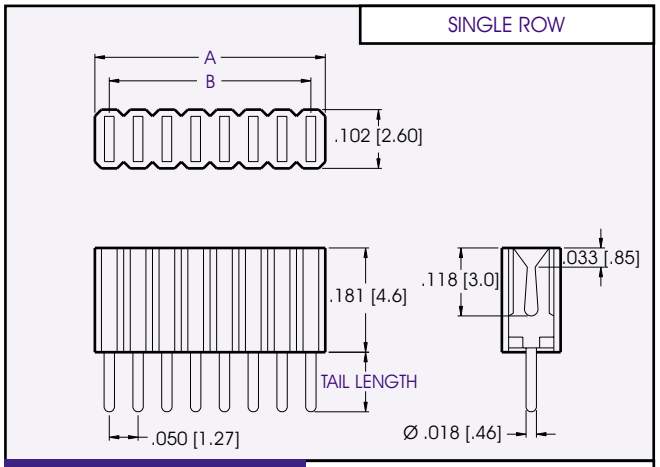

PCB LAYOUT

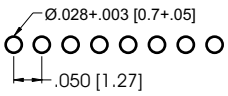

A = .050 x No. of Pos.
B = .050 x (No. of Cont. -1)

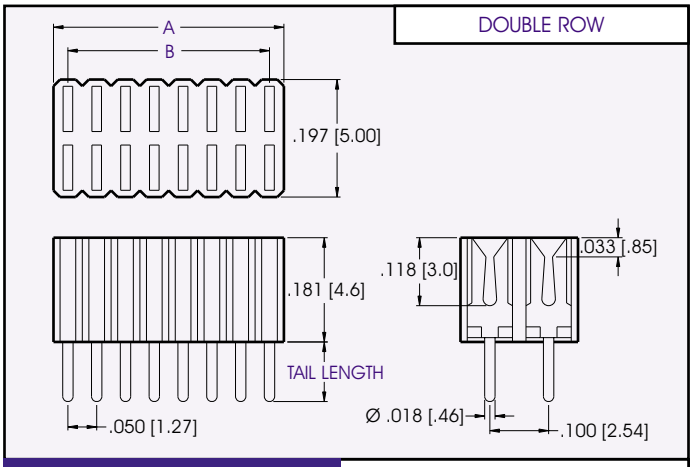

PCB LAYOUT

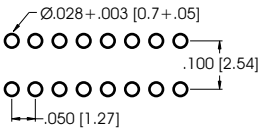

A = .050 x No. of Pos.
B = .050 x (No. of Cont./2 -1)

DIMENSIONS ARE IN INCHES [MM]

PART NUMBERING

96 | XX | S — A | X — XX — XX

SERIES CODE
.050 SOCKETS

NO. OF CONTACTS
SINGLE ROW = 03 - 40
DOUBLE ROW = 06 - 98
100 = 01

BODY STYLE
1 = SINGLE ROW
2 = DOUBLE ROW

TAIL LENGTH
01 = .094 [2.40] STANDARD
02 = .060 [1.50]
03 = .118 [3.00]
CONSULT FACTORY FOR OTHER TAIL LENGTH OPTIONS

CONTACT PLATING
.000050" Nickel underplate

	MATING	TAIL
00	100µ"Sn	100µ"Sn
03	Au Flash	Au Flash
80	10µ"Au	10µ"Au
90	30µ"Au	30µ"Au

SUGGESTED MATING CONNECTORS

SINGLE ROW:		DOUBLE ROW:	
96XX-AX-01-XX	(F-05)	96XX-JX-X1-XX	(F-14)
96XX-BX-01-XX	(F-06)	96XX-K1-01-XX	(F-15)
96XX-CX-01-XX-XXX	(F-07)	96XX-C2-01-XX-XXX	(F-07)

CONSULT FACTORY FOR CONNECTORS BUILT TO YOUR SPECIFICATION

ELECTRONIC CONNECTOR SERVICE INC. 11880 WESTERN AVE. STANTON, CA 90680 TOLL FREE (877) ECS-CONN TEL (714) 895-6351 FAX (714) 894-1858
WWW.ECSCONN.COM

9600S Series Sockets
.050 [1.27] High Profile Sockets

Specifications

Insulator Material: Glass filled polyester, Thermoplastic, 94V-O Nylon-6T, UL Recognized.
Contact Material: Phosphor Bronze
Contact Plating: Gold and/or Tin over .000050" Ni (See contact plating options)
.Insulation Resistance: 5000 M ohms min.
Contact Resistance: 20 m ohms max.
Dielectric Withstand Voltage: 500 VAC
Current Rating: 1 AMP
Operating Temperature: -40°C To +105°C
Max. Processing Temp.: 230°C for 60 seconds
UL File Numbers: E146967 & E176234

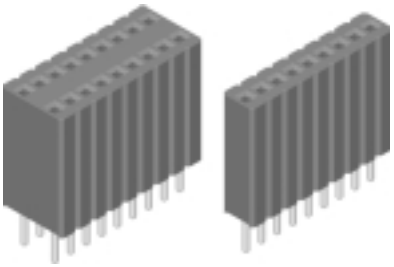

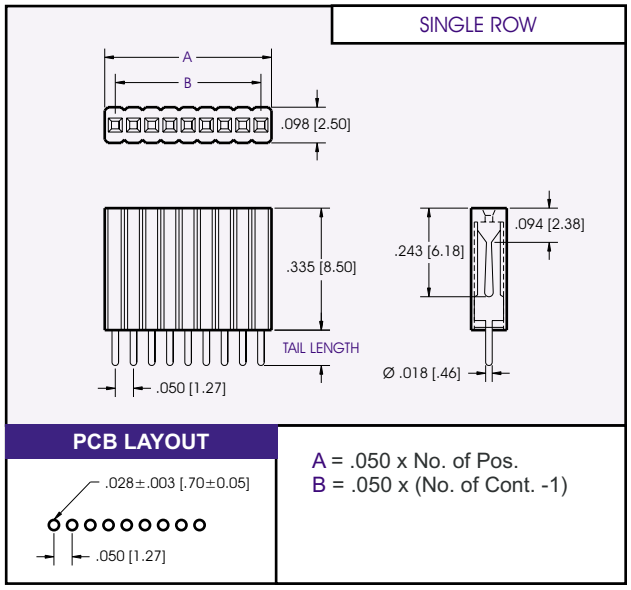

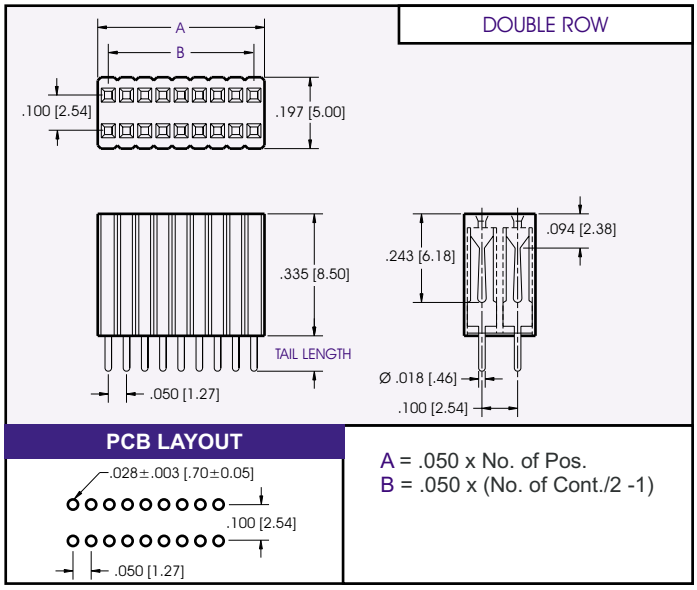

DIMENSIONS ARE IN INCHES [MM]

PART NUMBERING

96 | XX | S — B | X | — XX — XX

SERIES CODE
.050 SOCKETS

NO. OF CONTACTS
SINGLE ROW = 03 - 36
DOUBLE ROW = 06 - 98
100 = 01

NO. OF ROWS
1 = SINGLE ROW
2 = DOUBLE ROW

TAIL LENGTH
01 = .106 [2.70] (STANDARD)
02 = .087 [2.20]
03 = .118 [3.00]
04 = .189 [4.80]

CONTACT PLATING
.000050" Nickel underplate

	MATING	TAIL
00	= 100µ"Sn	100µ"Sn
01	= Au Flash	100µ"Sn
03	= Au Flash	Au Flash
10	= 10µ"Au	100µ"Sn
30	= 30µ"Au	100µ"Sn

SUGGESTED MATING CONNECTORS

SINGLE ROW:		DOUBLE ROW:	
96XX-AX-02-XX	(F-05)	96XX-JX-X2-XX	(F-14)
96XX-BX-02-XX	(F-06)	96XX-K1-02-XX	(F-15)
96XX-CX-02-XX-XXX	(F-07)	96XX-C2-02-XX-XXX	(F-07)

CONSULT FACTORY FOR CONNECTORS BUILT TO YOUR SPECIFICATION

ELECTRONIC CONNECTOR SERVICE INC. 11880 WESTERN AVE. STANTON, CA 90680 TOLL FREE (877) ECS-CONN TEL (714) 895-6351 FAX (714) 894-1858
WWW.ECSCONN.COM

9600S Series Sockets
.050 [1.27] SMT Socket

Specifications

Insulator Material: Glass filled polyester, Thermoplastic, 94V-O Nylon-6T, UL Recognized.
Contact Material: Phosphor Bronze
Contact Plating: Gold and/or Tin over .000050" Ni (See contact plating options)
Insulation Resistance: 5000 M ohms min.
Contact Resistance: 20 m ohms max.
Dielectric Withstand Voltage: 500 VAC
Current Rating: 1 AMP
Operating Temperature: -40°C To +105°C
Max. Processing Temp: 230°C for 60 seconds
UL File Numbers: E146967 & E176234

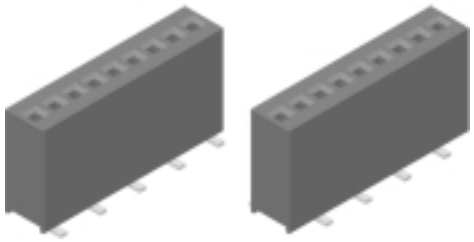

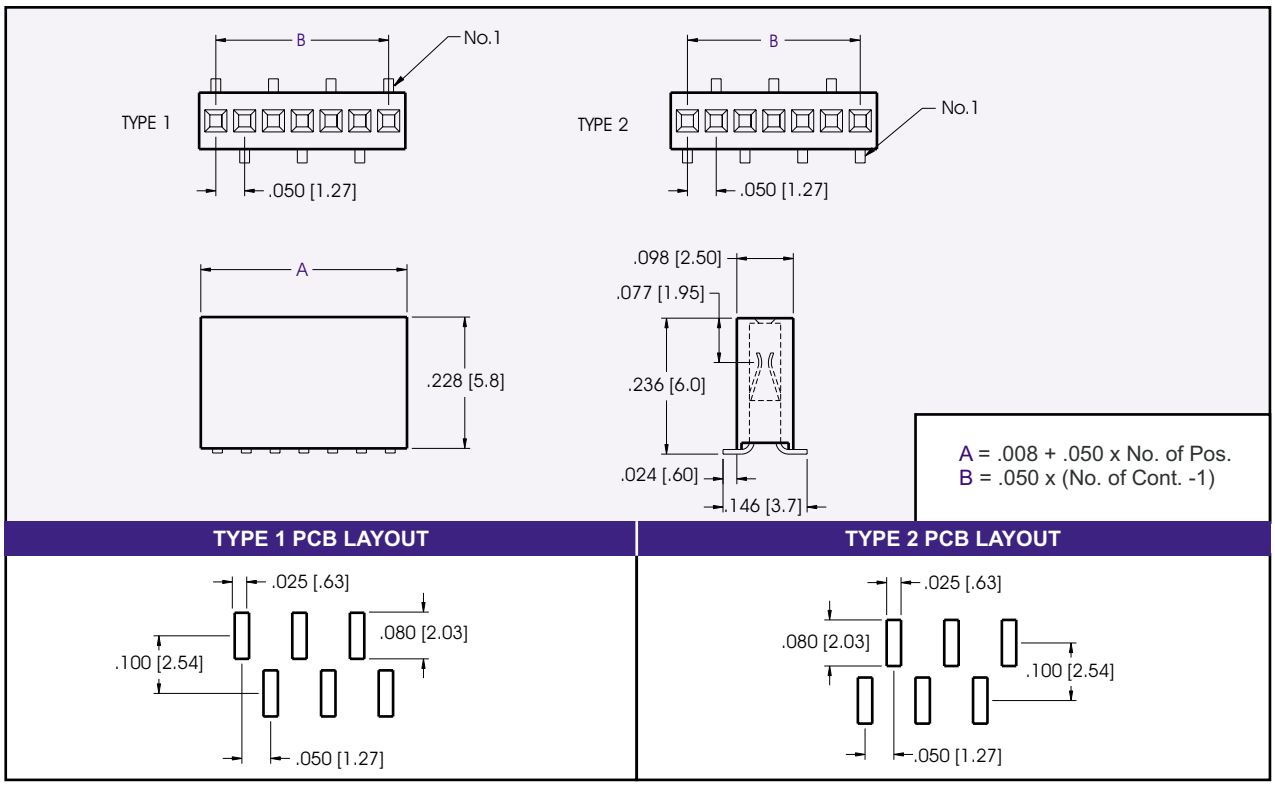

ALL DIMENSIONS ARE IN INCHES [MM]

PART NUMBERING

96 XX S — C X — 01 — XX — XX

SERIES CODE
.050 SOCKETS

NO. OF CONTACTS
03 - 40

CONNECTOR TYPE
1 = TYPE 1
2 = TYPE 2

CONTACT PLATING
.000050" Nickel underplate

MATING	TAIL
00 = 100µ" Sn	100µ"Sn
01 = Au Flash	100µ"Sn
03 = Au Flash	Au Flash
10 = 10µ"Au	100µ"Sn
30 = 30µ"Au	100µ"Sn

PACKAGING
TR = TAPE & REEL PACKAGING
PP = PICK AND PLACE PAD
BLANK = STANDARD PACKAGING
CONSULT FACTORY FOR TR AND PP PACKAGING AVAILABILITY

SUGGESTED MATING CONNECTORS

94XX-AX-01-XX	(PAGE F-05)
94XX-BX-01-XX	(PAGE F-06)
94XX-C1-01-XX-XXXX	(PAGE F-07)

CONSULT FACTORY FOR CONNECTORS BUILT TO YOUR SPECIFICATION

9600S Series Sockets
.050 x .050 Socket

Specifications

Insulator Material: Glass filled polyester, Thermoplastic, 94V-O Nylon-6T, UL Recognized.
Contact Material: Phosphor Bronze
Contact Plating: Gold or Tin over .000050" Ni (See contact plating options)
Insulation Resistance: 5000 M ohms min.
Contact Resistance: 20 m ohms max.
Dielectric Withstand Voltage: 500 VAC
Current Rating: 1 AMP
Operating Temperature: -40°C To +105°C
Max Processing Temp.: 230°C for 60 seconds
UL File Numbers: E146967 & E176234

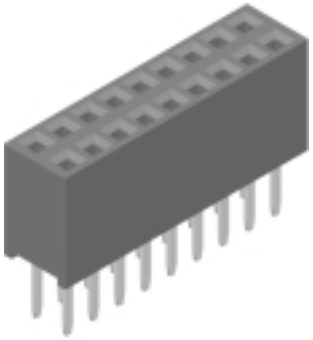

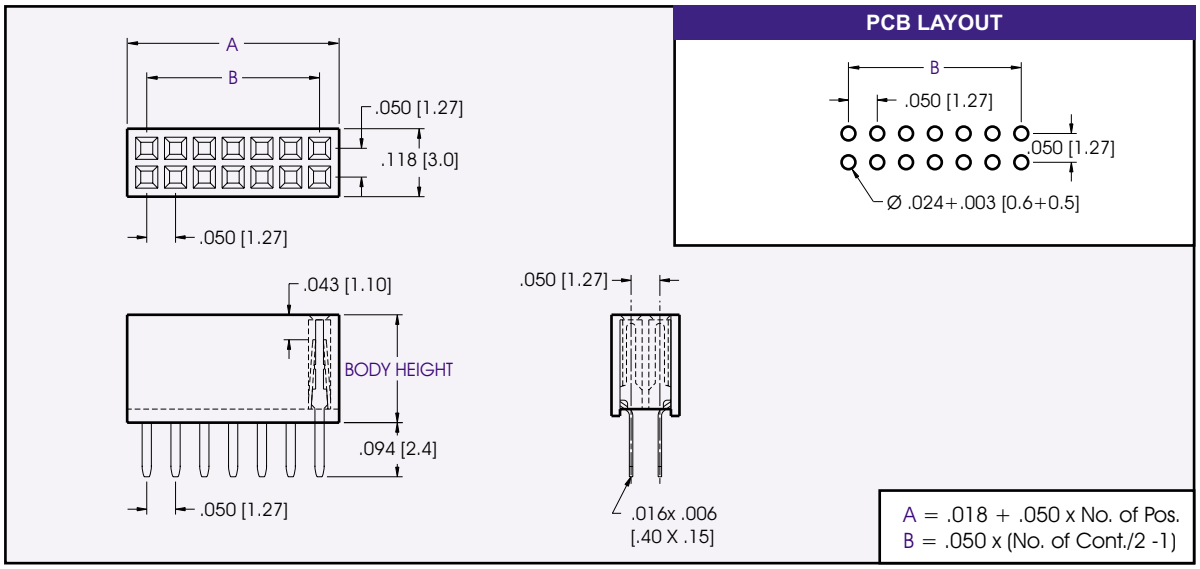

ALL DIMENSIONS ARE IN INCHES [MM]

PART NUMBERING

96 | XX | S — D | X — 01 — XX

SERIES CODE
.050 SOCKETS

NO. OF CONTACTS
06 - 98
100 = 01

BODY HEIGHT
1 = .134 [3.40]
2 = .169 [4.30]

TAIL LENGTH
01 = .094 [2.40]
CONSULT FACTORY FOR OTHER TAIL LENGTH OPTIONS

CONTACT PLATING
.000050" Nickel underplate

	MATING	TAIL
00	= 100µ"Sn	100µ"Sn
03	= Au Flash	Au Flash
80	= 10µ"Au	10µ"Au
90	= 30µ"Au	30µ"Au

SUGGESTED MATING CONNECTORS

96XX-DX-XX-XX	(PAGE F-08)
96XX-EX-XX-XX	(PAGE F-09)
96XX-FX-XX-XX	(PAGE F-10)
96XX-GX-XX-XX	(PAGE F-11)
96XX-HX-XX-XX-XXXX	(PAGE F-12)
96XX-IX-XX-XX	(PAGE F-13)

CONSULT FACTORY FOR CONNECTORS BUILT TO YOUR SPECIFICATION

9600S Series Sockets
.050 x .050 SMT Socket

Specifications

Insulator Material: Glass filled polyester, Thermoplastic, 94V-O Nylon-6T, UL Recognized.
Contact Material: Copper Alloy
Contact Plating: Gold or Tin over .000050" Ni (See contact plating options)
Insulation Resistance: 5000 M ohms min.
Contacts Resistance: 20 m ohms max.
Dielectric Withstand Voltage: 500 VAC
Current Rating: 1 AMP
Operating Temperature: -40°C To +105°C
Max Processing Temp: 230°C for 60 seconds
UL File Numbers: E146967 & E176234

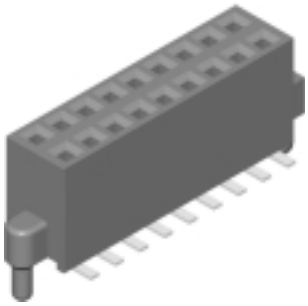

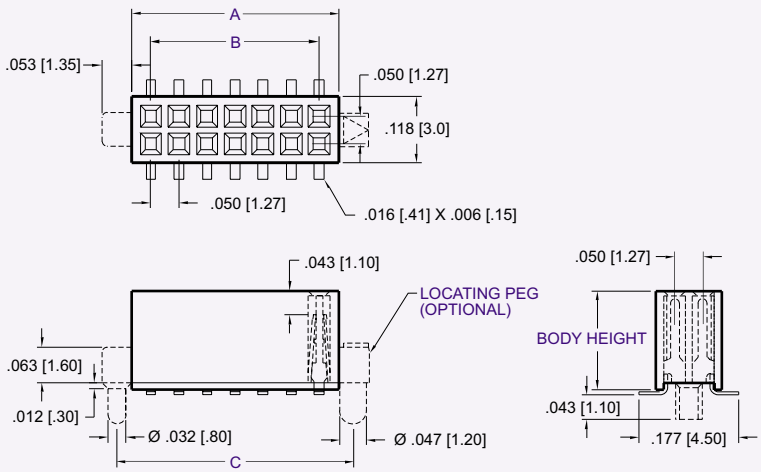

PCB LAYOUT

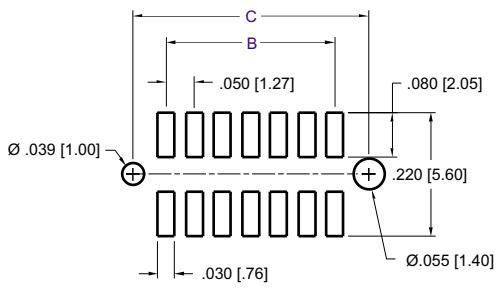

A = .018 + .050 x No. of Pos.
B = .050 x (No. of Cont./2 -1)
C = .120 + .050 x (No. of Cont./2 -1)

DIMENSIONS ARE IN INCHES & [MM]

PART NUMBERING

94 | XX | S — E | X — | X | 1 — | XX — | XX

SERIES CODE
.050 SOCKETS

NO. OF CONTACTS
06 - 98
100 = 01

BODY HEIGHT
01 = .142 [3.60]
02 = .177 [4.50]

LOCATING PEG
1 = WITH LOCATING PEG
2 = WITHOUT LOCATING PEG

CONTACT PLATING
.000050" Nickel underplate

	MATING	TAIL
00	100µ"Sn	100µ"Sn
03	Flash Au	Flash Au
80	15µ"Au	15µ"Au
90	30µ"Au	30µ"Au

PACKAGING
TR = TAPE & REEL PACKAGING
PP = PICK AND PLACE PAD
BLANK = STANDARD PACKAGING
CONSULT FACTORY FOR TR AND PP PACKAGING AVAILABILITY

SUGGESTED MATING CONNECTORS

96XX-DX-XX-XX	(PAGE F-08)
96XX-EX-XX-XX	(PAGE F-09)
96XX-FX-XX-XX	(PAGE F-10)
96XX-GX-XX-XX	(PAGE F-11)
96XX-HX-XX-XX-XXXX	(PAGE F-12)
96XX-IX-XX-XX	(PAGE F-13)

CONSULT FACTORY FOR CONNECTORS BUILT TO YOUR SPECIFICATION

9600S Series Sockets
.050 x.100 SMT Socket Dual Entry

Specifications

Insulator Material: Glass filled polyester, Thermoplastic, 94V-O Nylon-6T, UL Recognized.
Contact Material: Phosphor Bronze
Contact Plating: Gold and/or Tin over .000050" Ni, (See contact plating options)
Insulation Resistance: 5000 M ohms min.
Contact Resistance: 20 m ohms max.
Dielectric Withstand Voltage: 500 VAC
Current Rating: 1 AMP
Operating Temperature: -40°C To +105°C
Max. Processing Temp.: 230°C for 60 seconds
UL File Numbers: E146967 & E176234

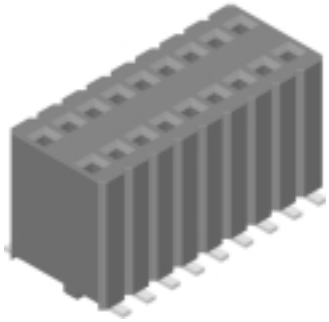

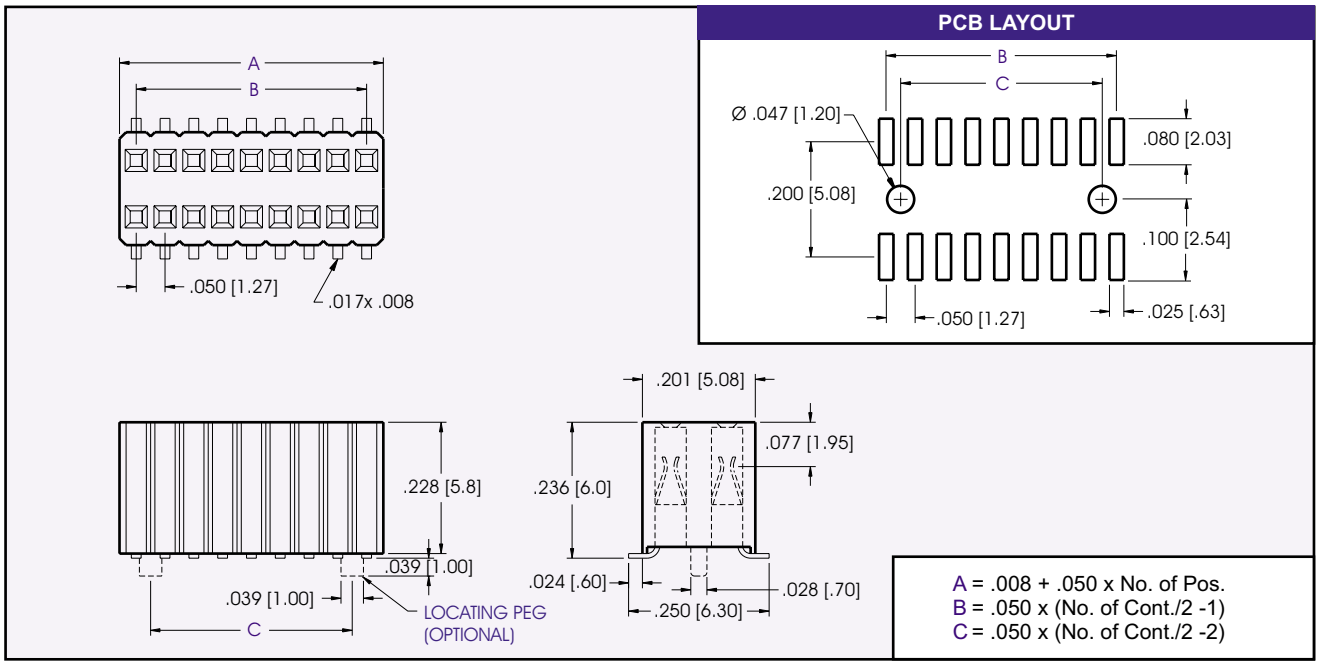

ALL DIMENSIONS ARE IN INCHES [MM]

PART NUMBERING

96 | XX | S — F1 — | X | 1 — | XX | — | XX |

SERIES CODE
.050 SOCKETS

NO. OF CONTACTS
06 - 98
100 = 01

LOCATING PEG
0 = WITHOUT LOCATING PEG
1 = WITH LOCATING PEG

CONTACT PLATING
.000050" Nickel underplate

	MATING	TAIL
00	= 100µ"Sn	100µ"Sn
01	= Au Flash	100µ"Sn
03	= Au Flash	Au Flash
10	= 10µ"Au	100µ"Sn
30	= 30µ"Au	100µ"Sn

PACKAGING
TR = TAPE & REEL PACKAGING
PP = PICK AND PLACE PAD
BLANK = STANDARD PACKAGING
CONSULT FACTORY FOR TR AND PP PACKAGING AVAILABILITY

CONSULT FACTORY FOR CUSTOM CONNECTORS BUILT TO YOUR SPECIFICATION

ELECTRONIC CONNECTOR SERVICE INC. 11880 WESTERN AVE. STANTON, CA 90680 TOLL FREE (877) ECS-CONN TEL (714) 895-6351 FAX (714) 894-1858
WWW.ECSCONN.COM

9400 Series Headers
.079 [2.00] Stacking Headers

Specifications

Insulator Material: Glass filled polyester, Type PBT, 94V-O, UL Recognized.
Contact Material: Copper Alloy
Contact Plating: Gold and/or Tin over .000050" Ni (See contact plating options)
Insulation Resistance: 5000 M ohms min.
Dielectric Withstand Voltage: 500 VAC
Current Rating: 1 AMP
Contact Resistance: 20 m ohms max
Operating Temperature: -40°C To +105°C
UL File Numbers: E146967 & E176234

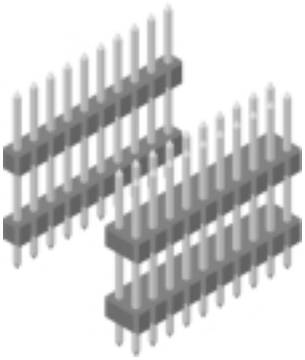

SINGLE ROW

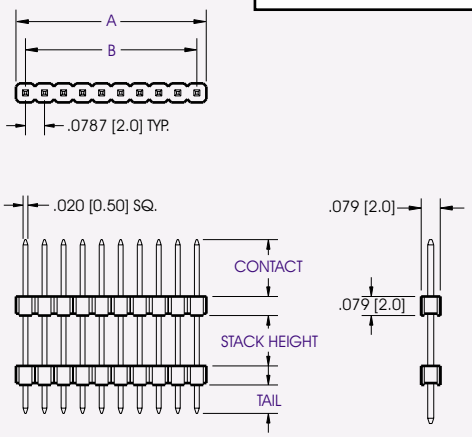

PCB LAYOUT

A = .0787 x No. of Pos. ± .020
B = .0787 x (No. of Cont. -1)

SUGGESTED MATING CONNECTORS

94XXS-AX-XX-XX (PAGE F-28)
94XXS-BX-XX-XX (PAGE F-29)

DOUBLE ROW

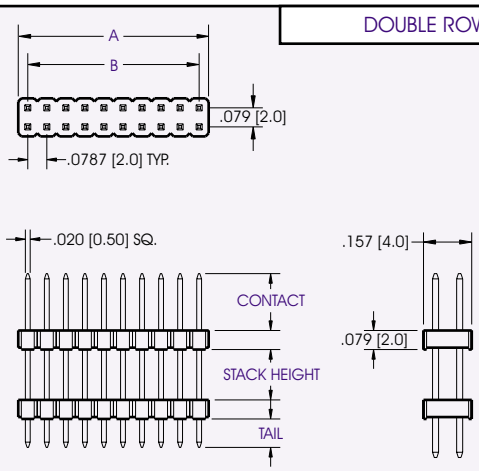

PCB LAYOUT

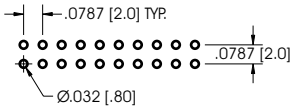

A = .0787 x No. of Pos. ± .020
B = .0787 x (No. of Cont./2 -1)

SUGGESTED MATING CONNECTORS

94XXS-CX-XX-XX (PAGE F-30)
94XXS-DX-XX-XX (PAGE F-31)
94XXS-EX-XX-XX (PAGE F-32)
94XXS-FX-XX-XX (PAGE F-33)
94XXS-FL-XX-XX (PAGE F-34)
94XXS-GX-XX-XX (PAGE F-35)

DIMENSIONS ARE IN INCHES & [MM]

PART NUMBERING

94 | XX — X 1 — XX — XX — XXXX

SERIES CODE
.079 HEADERS

NO. OF CONTACTS
SINGLE ROW = 02 - 40
DOUBLE ROW = 04 - 80

NO. OF ROWS
C = SINGLE ROW
D = DOUBLE ROW

CONTACT LENGTH OPTIONS

	CONTACT	TAIL
01 =	.157 [4.00]	.110 [2.80]

CONSULT FACTORY FOR OTHER CONTACT LENGTH OPTIONS

CONTACT PLATING
.000050" Nickel underplate

	CONTACT	TAIL
00 =	100µ"Sn	100µ"Sn
01 =	Au Flash	100µ"Sn
03 =	Au Flash	Au Flash
10 =	10µ"Au	100µ"Sn
30 =	30µ"Au	100µ"Sn

STACK HEIGHT
Ex.
.600 = 0600
1.200 = 1200

CONSULT FACTORY FOR CUSTOM CONNECTORS BUILT TO YOUR SPECIFICATION

9400 Series Header
.079 x .079 SMT Header

Specifications

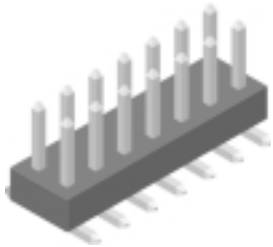

Insulator Material: Glass filled polyester, Thermoplastic, 94V-O Nylon-6T, UL Recognized.
Contact Material: Copper Alloy
Contact Plating: Gold and/or Tin over .000050" Ni (See contact plating options)
Insulation Resistance: 5000 M ohms min.
Dielectric Withstand Voltage: 500 VAC
Current Rating: 1 AMP
Contact Resistance: 20 m ohms max
Operating Temperature: -40°C To +105°C
Max. Processing Temp.: 230°C for 60 seconds
UL File Numbers: E146967 & E176234

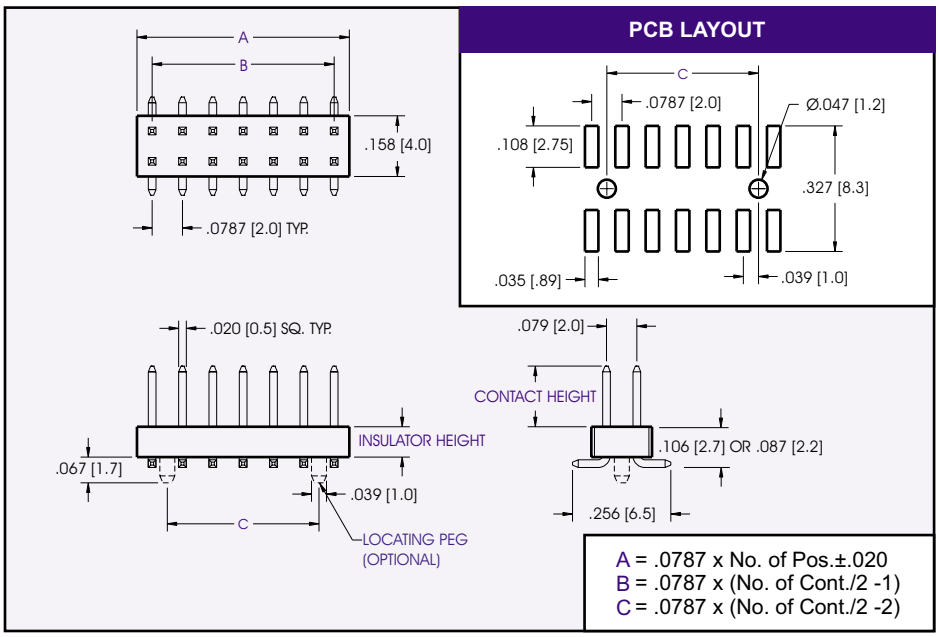

SUGGESTED MATING CONNECTORS

94XXS-CX-XX-XX (PAGE F-30)
94XXS-DX-XX-XX (PAGE F-31)
94XXS-EX-XX-XX (PAGE F-32)
94XXS-FX-XX-XX (PAGE F-33)
94XXS-FL-XX-XX (PAGE F-34)
94XXS-GX-XX-XX (PAGE F-35)

DIMENSIONS ARE IN INCHES & [MM]

PART NUMBERING

94 XX — E X — XX — XX — X XX

SERIES CODE
.079 HEADERS

NO. OF CONTACTS
06 - 80

INSULATOR HEIGHT
1 = .059 [1.50]
2 = .0787 [2.00]

CONTACT HEIGHT
01 = .157 [4.00] (1.5mm INSULATOR)
02 = .138 [3.50] (2.0mm INSULATOR)
CONSULT FACTORY FOR OTHER CONTACT LENGTH OPTIONS

CONTACT PLATING
.000050" Nickel underplate

	CONTACT	TAIL
00	100µ"Sn	100µ"Sn
03	Au Flash	Au Flash
80	10µ"Au	10µ"Au
90	30µ"Au	30µ"Au

LOCATING PEG
0 = WITHOUT LOCATING PEG
1 = WITH LOCATING PEG

PACKAGING
TR = TAPE & REEL PACKAGING
PP = PICK AND PLACE PAD
BLANK = STANDARD PACKAGING
CONSULT FACTORY FOR TR AND PP PACKAGING AVAILABILITY

CONSULT FACTORY FOR CUSTOM CONNECTORS BUILT TO YOUR SPECIFICATION

9400 Series Headers
.079 [2.00] Box Header

Specifications

Insulator Material: Glass filled polyester, Thermoplastic, 94V-O Nylon-6T, UL Recognized.
Contact Material: Copper Alloy
Contact Plating: Gold over .000050" Ni (See contact plating options)
Insulation Resistance: 5000 M ohms min.
Dielectric Withstand Voltage: 500 VAC
Current Rating: 1 AMP
Operating Temperature: -40°C To +105°C
Max. Processing Temp: 230°C for 30 seconds
UL File Numbers: E146967 & E176234

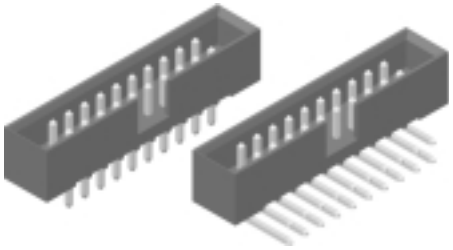

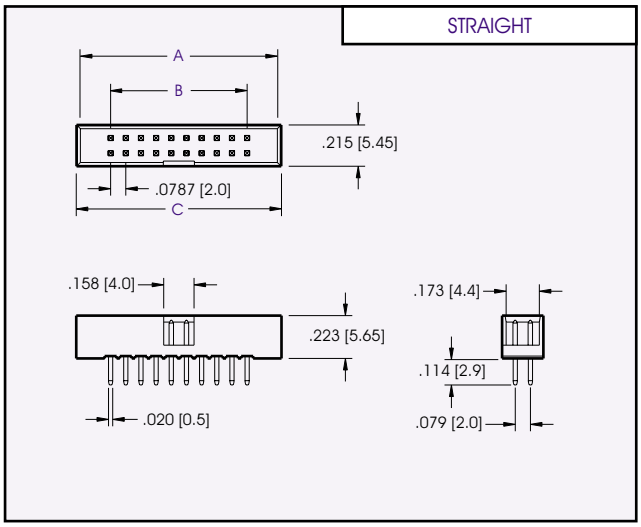

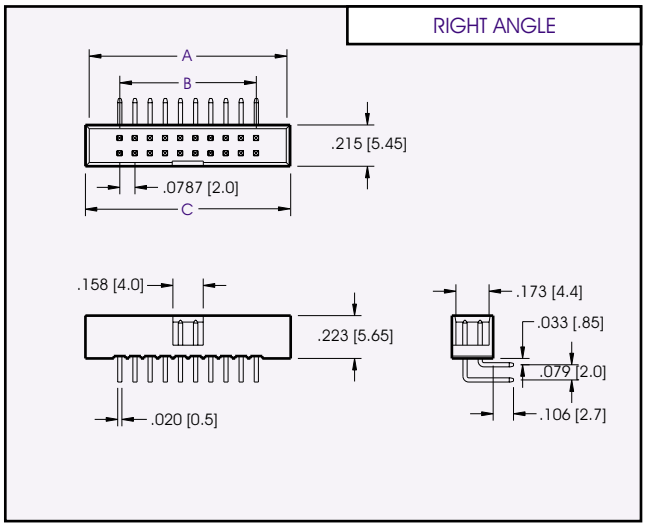

DIMENSIONS ARE IN INCHES & [MM]

A = .236 + .0787 x No. of Pos.
B = .0787 x (No. of Cont./2 -1)
C = .276 + .0787 x No. of Pos.

PCB LAYOUT

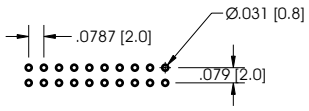

SUGGESTED MATING CONNECTOR

94XXS-GX-11-01 (PAGE F-35)

PART NUMBERING

94 XX — F X — 01 — XX

SERIES CODE
.079 HEADERS

NO. OF CONTACTS
10, 12, 14, 20, 24, 26
28, 30, 32, 36, 40, 44, 50

TAIL STYLE
1 = STRAIGHT
2 = RIGHT ANGLE

CONTACT PLATING
.000050" Nickel underplate

	CONTACT	TAIL
03	= Au Flash	Au Flash
80	= 10µ"Au	10µ"Au
90	= 30µ"Au	30µ"Au

CONSULT FACTORY FOR CUSTOM CONNECTORS BUILT TO YOUR SPECIFICATION

ELECTRONIC CONNECTOR SERVICE INC. 11880 WESTERN AVE. STANTON, CA 90680 TOLL FREE (877) ECS-CONN TEL (714) 895-6351 FAX (714) 894-1858
WWW.ECSCONN.COM

9400 Series Headers
.079 [2.00] SMT Box Header

Specifications

Insulator Material: Glass filled polyester, Thermoplastic, 94V-O Nylon-6T, UL Recognized.
Contact Material: Copper Alloy
Contact Plating: Gold over .000050" Ni (See contact plating options)
Insulation Resistance: 5000 M ohms min.
Dielectric Withstand Voltage: 500 VAC
Current Rating: 1 AMP
Operating Temperature: -40°C To +105°C
Max. Processing Temp.: 230°C for 60 seconds
UL File Numbers: E146967 & E176234

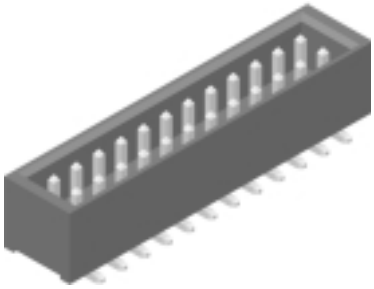

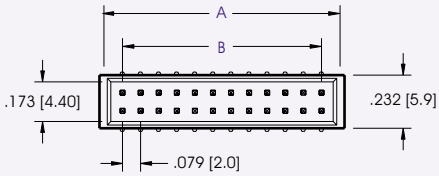

PCB LAYOUT

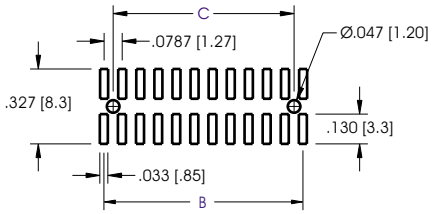

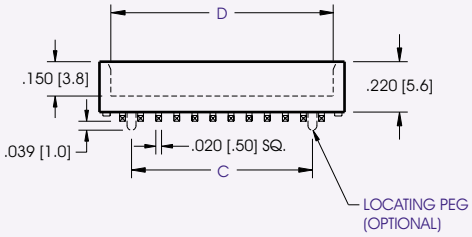

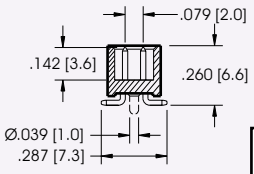

A = .083 + .0787 x No. of Pos.
B = .0787 x (No. of Cont./2 -1)
C = .0787 x (No. of Cont./2 -2)
D = .102 + .0787 x (No. of Cont./2 -1)

DIMENSIONS ARE IN INCHES & [MM]

PART NUMBERING

94 XX — G X — 01 — XX — XX

SERIES CODE
.079 HEADERS

NO. OF CONTACTS
06 - 80

LOCATING PEG
0 = WITHOUT LOCATING PEG
1 = WITH LOCATING PEG

CONTACT PLATING
.000050" Nickel underplate

	CONTACT	TAIL
03	= Au Flash	Au Flash
80	= 10µ"Au	10µ"Au
90	= 30µ"Au	30µ"Au

PACKAGING
TR = TAPE & REEL PACKAGING
PP = PICK AND PLACE PAD
BLANK = STANDARD PACKAGING
CONSULT FACTORY FOR TR AND PP PACKAGING AVAILABILITY

SUGGESTED MATING CONNECTORS

94XXS-DX-XX-XX (PAGE F-31)
94XXS-FX-XX-XX (PAGE F-33)

CONSULT FACTORY FOR CUSTOM CONNECTORS BUILT TO YOUR SPECIFICATION

9400 Series Headers
.079 [2.00] Four Row Header

Specifications

Insulator Material: Glass filled polyester, Thermoplastic, 94V-O Nylon-6T, UL Recognized.
Contact Material: Copper Alloy
Contact Plating: Gold and/or Tin .000050" Ni (See contact plating options).
Insulation Resistance: 5000 M ohms min.
Dielectric Withstand Voltage: 500 VAC
Current Rating: 1 AMP
Operating Temperature: -40°C To +105°C
UL File Numbers: E146967 & E176234

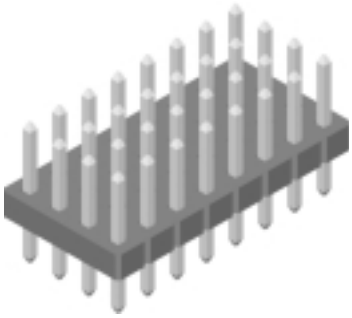

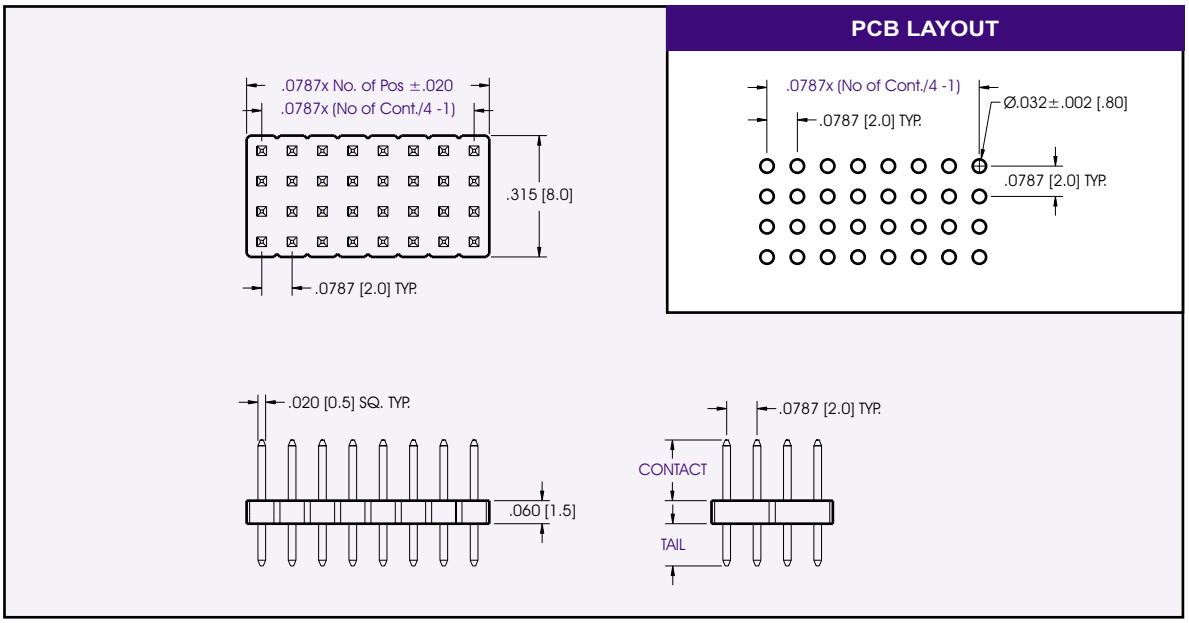

DIMENSIONS ARE IN INCHES & [MM]

PART NUMBERING

94 | XX — H1 — XX — XX

SERIES CODE
.079 HEADERS

NO. OF CONTACTS
24 - 96
01 = 100
02 = 104
03 = 108
04 = 112
05 = 116
06 = 120

TAIL OPTIONS

	CONTACT	TAIL
01 =	.173 [4.40]	.095 [2.40]

CONSULT FACTORY FOR OTHER TAIL LENGTH OPTIONS

CONTACT PLATING
.000050" Nickel underplate

	CONTACT	TAIL
00 =	100µ" Sn	100µ"Sn
01 =	Au Flash	100µ"Sn
03 =	Au Flash	Au Flash
10 =	10µ"Au	100µ"Sn
30 =	30µ"Au	100µ"Sn

SUGGESTED MATING CONNECTOR

94XXS-H1-11-XX (PAGE F-36)

CONSULT FACTORY FOR CUSTOM CONNECTORS BUILT TO YOUR SPECIFICATION

9400S Series Sockets
.079 [2.00] Single Row Socket

Specifications

Insulator Material: Glass filled polyester, Thermoplastic, 94V-O Nylon-6T, UL Recognized.
Contact Material: Phosphor Bronze
Contact Plating: Gold and/or Tin over .000050" Ni (See contact plating options)
Insulation Resistance: 5000 M ohms min.
Dielectric Withstand Voltage: 500 VAC
Current Rating: 1 AMP
Operating Temperature: -40°C To +105°C
Contact Resistance: 20 m ohms max.
Max Processing Temp.: 230°C for 60 seconds
UL File Numbers: E146967 & E176234

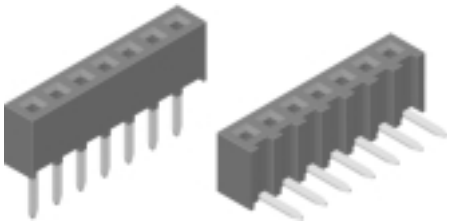

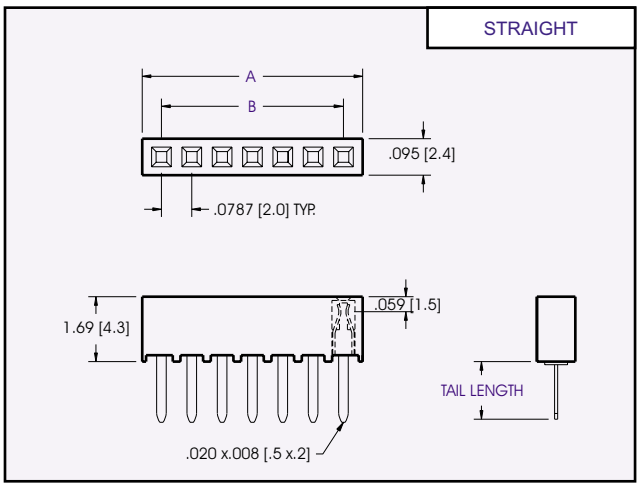

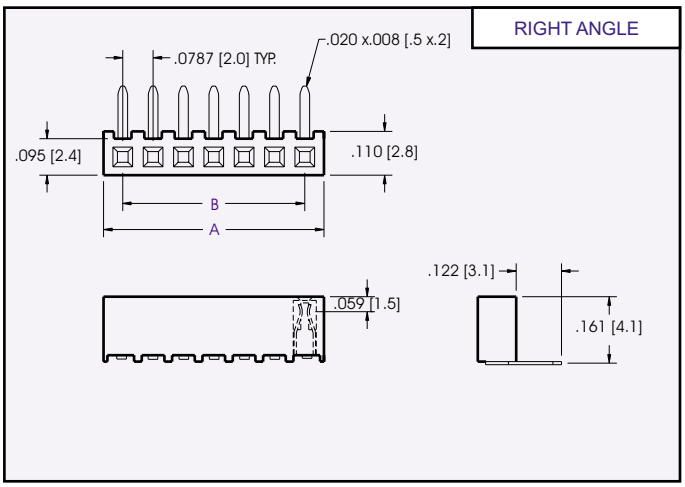

DIMENSIONS ARE IN INCHES & [MM]

A = .020 + .0787 x No. of Pos.
B = .0787 x (No. Of Cont. -1)

PCB LAYOUT

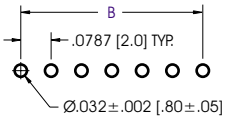

SUGGESTED MATING CONNECTORS

94XX-AX-XX-XX (PAGE F-22)
94XX-C1-XX-XX (PAGE F-23)

PART NUMBERING

94 | XX | S — A | X | — | XX | — | XX | — | XX |

SERIES CODE
.079 SOCKETS

NO. OF CONTACTS
STRAIGHT : 03 - 40
RIGHT ANGLE : 03 - 25

TAIL STYLE
1 = STRAIGHT
2 = RIGHT ANGLE

TAIL LENGTH
01 = .094 [2.40] STRAIGHT (STANDARD)
02 = .047 [1.20] STRAIGHT
05 = .122 [3.10] RIGHT ANGLE

CONTACT PLATING
.000050" Nickel underplate

	CONTACT	TAIL
00	100µ"Sn	100µ"Sn
01	Au Flash	100µ"Sn
03	Au Flash	Au Flash
10	10µ"Au	100µ"Sn
20	15µ"Au	100µ"Sn
30	30µ"Au	100µ"Sn

LOCKING LEADS
LL = LOCKING LEADS
LEAVE BLANK FOR STANDARD

CONSULT FACTORY FOR CONNECTORS BUILT TO YOUR SPECIFICATION

9400S Series Sockets
.079 [2.00] SMT Socket

Specifications

Insulator Material: Glass filled polyester, Thermoplastic, 94-VO Nylon-6T, UL Recognized.
Contact Material: Phosphor Bronze
Contact Plating: Gold or Tin over .000050" Ni (See contact plating options).
Insulation Resistance: 5000 M ohms min.
Dielectric Withstand Voltage: 500 VAC
Current Rating: 1 AMP
Operating Temperature: -40°C To +105°C
Contact Resistance: 20 m ohms max.
Max Processing Temp.: 230°C for 60 seconds
UL File Numbers: E146967 & E176234

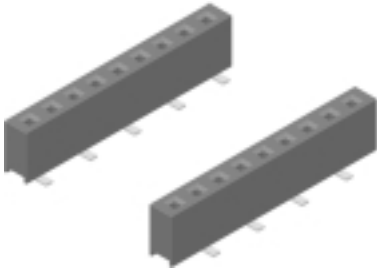

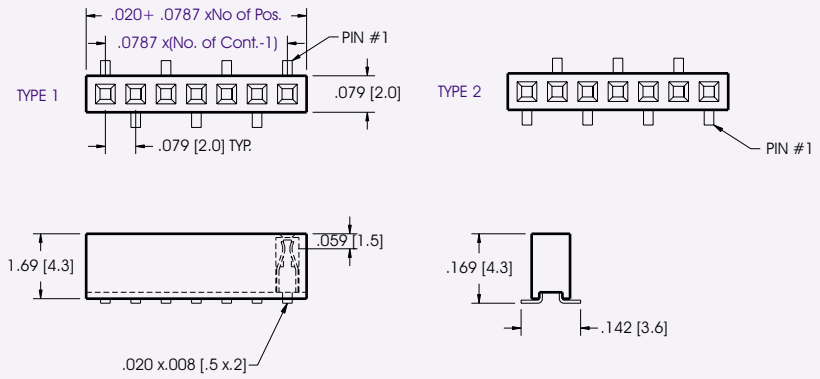

TYPE 1 PCB LAYOUT

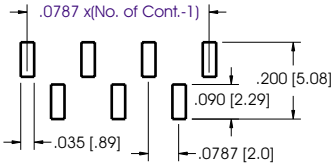

TYPE 2 PCB LAYOUT

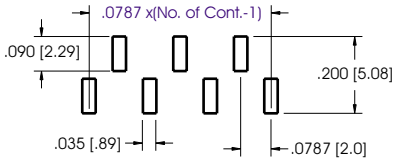

DIMENSIONS ARE IN INCHES & [MM]

PART NUMBERING

94 XX S — B X — 11 — XX — XX

SERIES CODE
.079 SOCKETS

NO. OF CONTACTS
03 - 40

CONNECTOR TYPE
1 = TYPE 1
2 = TYPE 2

CONTACT PLATING
.000050" Nickel underplate

	CONTACT	TAIL
00	= 100µ"Sn	100µ"Sn
03	= Au Flash	Au Flash
80	= 10µ"Au	10µ"Au
85	= 15µ"Au	15µ"Au
90	= 30µ"Au	30µ"Au

PACKAGING
TR = TAPE & REEL PACKAGING
PP = PICK AND PLACE PAD
BLANK = STANDARD PACKAGING
CONSULT FACTORY FOR TR AND PP PACKAGING AVAILABILITY

SUGGESTED MATING CONNECTORS

94XX-AX-XX-XX (PAGE F-22)
94XX-CX-XX-XX (PAGE F-23)

CONSULT FACTORY FOR CONNECTORS BUILT TO YOUR SPECIFICATION

9400S Series Sockets
.079 [2.00] Straight & R/A Sockets

Specifications

Insulator Material: Glass filled polyester, Thermoplastic, 94V-O Nylon-6T, UL Recognized.
Contact Material: Phosphor Bronze
Contact Plating: Gold and/or Tin over .000050" Ni (See contact plating options)
Insulation Resistance: 5000 M ohms min.
Dielectric Withstand Voltage: 500 VAC
Current Rating: 1 AMP
Operating Temperature: -40°C To +105°C
Contact Resistance: 20 m ohms max.
Max Processing Temp.: 230°C for 30 seconds
UL File Numbers: E146967 & E176234

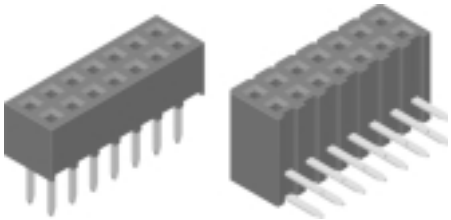

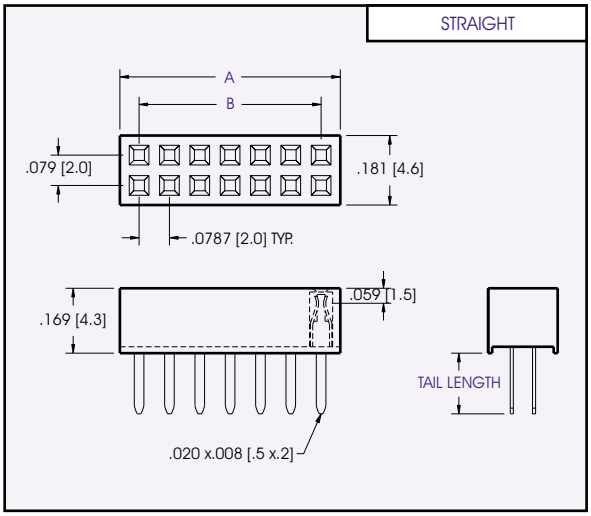

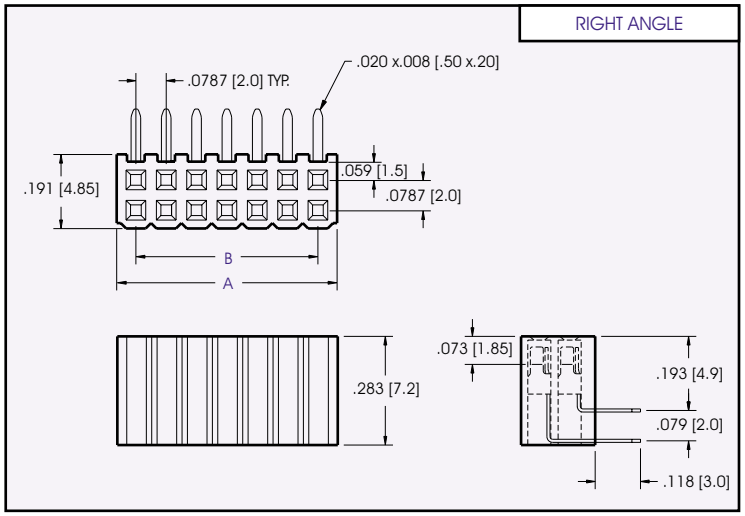

DIMENSIONS ARE IN INCHES & [MM]

SUGGESTED MATING CONNECTORS	
94XX-BX-XX-XX	(PAGE F-22)
94XX-DX-XX-XX	(PAGE F-23)
94XX-EX-XX-XX-X	(PAGE F-24)

PCB LAYOUT

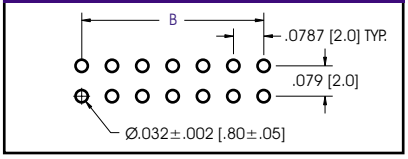

A = .020 + .0787 x No. of Pos.
B = .0787 x (No. Of Cont./2 -1)

PART NUMBERING

94 | XX | S — C | X — XX — XX — XX

SERIES CODE
.079 SOCKETS

NO. OF CONTACTS
06 - 80

TAIL STYLE
1 = STRAIGHT
2 = RIGHT ANGLE

TAIL LENGTH
01 = .094 [2.40] (STANDARD)
02 = .047 [1.20]
03 = .126 [3.20]
05 = .118 [3.00] RIGHT ANGLE

CONTACT PLATING
.000050" Nickel underplate

	CONTACT	TAIL
00	= 100µ"Sn	100µ"Sn
01	= Au Flash	100µ"Sn
03	= Au Flash	Au Flash
10	= 10 µ"Au	100µ"Sn
20	= 15 µ"Au	100µ"Sn
30	= 30 µ"Au	100µ"Sn

LOCKING LEADS
LL = LOCKING LEADS
LEAVE BLANK FOR STANDARD

CONSULT FACTORY FOR CONNECTORS BUILT TO YOUR SPECIFICATION

9400S Series Sockets
.079 [2.00] Low Profile Socket

Specifications

Insulator Material: Glass filled polyester, Thermoplastic, 94V-O Nylon-6T, UL Recognized.
Contact Material: Phosphor Bronze
Contact Plating: Gold or Tin over .000050" Ni (See contact plating options)
Insulation Resistance: 5000 M ohms min.
Dielectric Withstand Voltage: 500 VAC
Current Rating: 1 AMP
Operating Temperature: -40°C To +105°C
Contact Resistance: 20 m ohms max.
Max Processing Temp.: 230°C for 60 seconds
UL File Numbers: E146967 & E176234

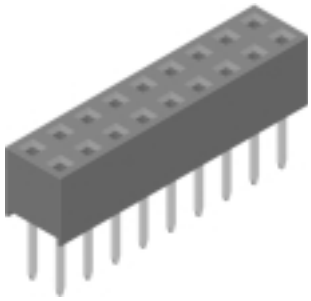

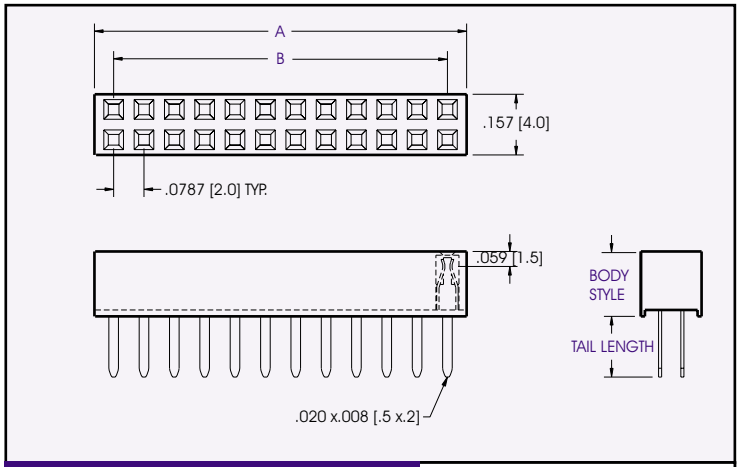

PCB LAYOUT

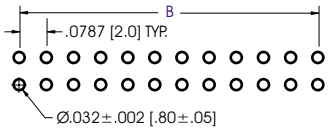

A = .0787 x No. of Pos.
B = .0787 x (No. Of Cont./2 -1)

DIMENSIONS ARE IN INCHES & [MM]

SUGGESTED MATING CONNECTORS	
94XX-BX-XX-XX	(PAGE F-22)
94XX-DX-XX-XX	(PAGE F-23)
94XX-EX-XX-XX-X	(PAGE F-24)
94XX-GX-XX-XX-X	(PAGE F-26)

PART NUMBERING

94 | XX | S — D | X — XX — XX — XX

SERIES CODE
.079 SOCKETS

NO. OF CONTACTS
06 - 64

BODY STYLE
1 = .157 [4.00]
2 = .175 [4.45]

TAIL LENGTH
BODY STYLE 1
01 = .094 [2.40]
02 = .047 [1.20]

BODY STYLE 2
03 = .079 [2.00]
04 = .102 [2.60]
05 = .055 [1.40]

CONTACT PLATING
.000050" Nickel underplate

	CONTACT	TAIL
00	100µ"Sn	100µ"Sn
03	Au Flash	Au Flash
80	10µ"Au	10µ"Au
90	30µ"Au	30µ"Au

LOCKING LEADS
LL = LOCKING LEADS
LEAVE BLANK FOR STANDARD

CONSULT FACTORY FOR CONNECTORS BUILT TO YOUR SPECIFICATION

9400S Series Sockets
.079 [2.00] High Profile Socket

Specifications

Insulator Material: Glass filled polyester, Thermoplastic, 94V-O Nylon-6T, UL Recognized.
Contact Material: Phosphor Bronze
Contact Plating: Gold and/or or Tin over .000050" Ni (See contact plating options)
Insulation Resistance: 5000 M ohms min.
Dielectric Withstand Voltage: 500 VAC
Current Rating: 1 AMP
Operating Temperature: -40°C To +105°C
Contact Resistance: 20 m ohms max.
Max Processing Temp.: 230°C for 60 seconds
UL File Numbers: E146967 & E176234

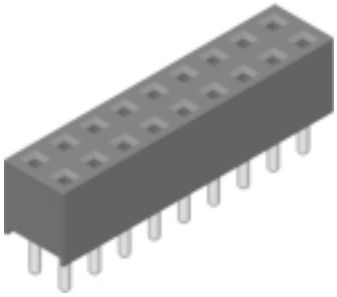

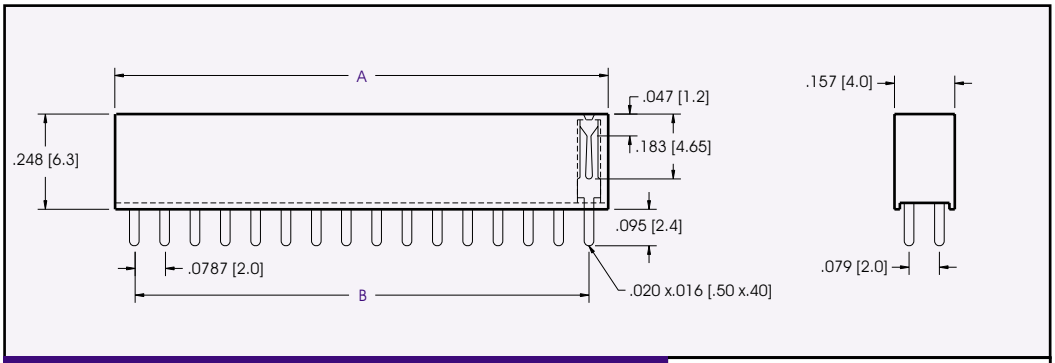

PCB LAYOUT

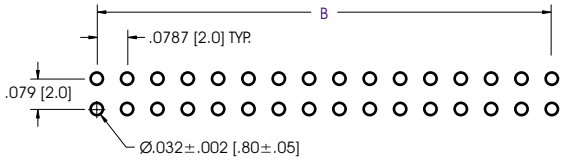

A = .016 + (.0787 x No. of Pos.)
B = .0787 x (No. of Cont./2 -1)

DIMENSIONS ARE IN INCHES & [MM]

PART NUMBERING

94 | XX | S — E1 — 11 — XX — XX

SERIES CODE
.079 SOCKETS

NO. OF CONTACTS
12 - 60

CONTACT PLATING
.000050" Nickel underplate

	CONTACT	TAIL
00	= 100µ"Sn	100µ"Sn
01	= Au Flash	100µ"Sn
03	= Au Flash	Au Flash
10	= 10µ"Au	100µ"Sn
20	= 15µ"Au	100µ"Sn
30	= 30µ"Au	100µ"Sn

LOCKING LEADS
LL = LOCKING LEADS
LEAVE BLANK FOR STANDARD

SUGGESTED MATING CONNECTORS

94XX-BX-XX-XX (PAGE F-22)
94XX-DX-XX-XX (PAGE F-23)
94XX-EX-XX-XX-X (PAGE F-24)

CONSULT FACTORY FOR CONNECTORS BUILT TO YOUR SPECIFICATION

ELECTRONIC CONNECTOR SERVICE INC. 11880 WESTERN AVE. STANTON, CA 90680 TOLL FREE (877) ECS-CONN TEL (714) 895-6351 FAX (714) 894-1858
WWW.ECSCONN.COM

9400S Series Sockets
.079 [2.00] 2 Row SMT Socket

Specifications

Insulator Material: Glass filled polyester, Thermoplastic, 94V-O Nylon-6T, UL Recognized.
Contact Material: Phosphor Bronze
Contact Plating: Gold or Tin over .000050" Ni (See contact plating options)
Insulation Resistance: 5000 M ohms min.
Dielectric Withstand Voltage: 500 VAC
Current Rating: 1 AMP
Operating Temperature: -40°C To +105°C
Contact Resistance: 20 m ohms max.
Max Processing Temp.: 230°C for 60 seconds
UL File Numbers: E146967 & E176234

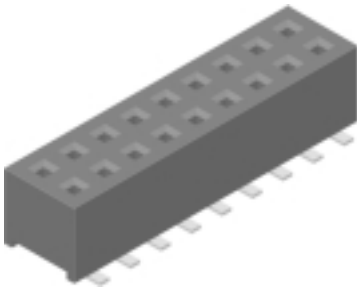

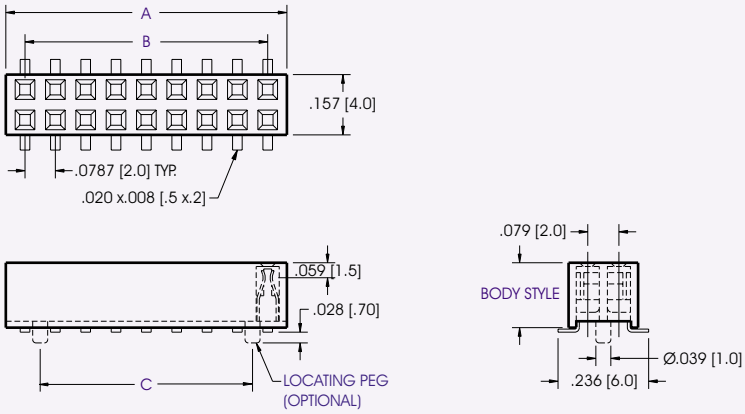

PCB LAYOUT

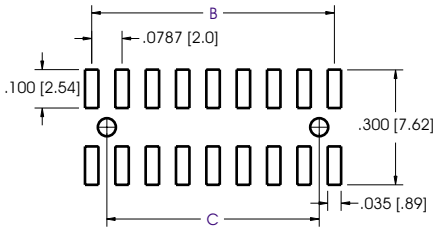

A = .0787 x No. of Pos.
B = .0787 x (No. Of Cont./2 -1)
C = .0787 x (No. Of Cont./2 -2)

SUGGESTED MATING CONNECTORS

94XX-BX-XX-XX	(PAGE F-22)
94XX-DX-XX-XX	(PAGE F-23)
94XX-EX-XX-XX-X	(PAGE F-24)
94XX-GX-XX-XX-X	(PAGE F-26)

DIMENSIONS ARE IN INCHES & [MM]

PART NUMBERING

94 | XX | S — F | X | — XX — XX — XX

SERIES CODE
.079 SOCKETS

NO. OF CONTACTS
06 - 60

BODY STYLE
1 = .170 [4.30]
2 = .177 [4.50]

LOCATING PEG
00 = WITHOUT LOCATING PEG
01 = WITH LOCATING PEG

CONTACT PLATING
.000050" Nickel underplate

	CONTACT	TAIL
00	100µ"Sn	100µ"Sn
03	Au Flash	Au Flash
80	10µ"Au	10µ"Au
85	15µ"Au	15µ"Au
90	30µ"Au	30µ"Au

PACKAGING
TR = TAPE & REEL PACKAGING
PP = PICK AND PLACE PAD
BLANK = STANDARD PACKAGING
CONSULT FACTORY FOR TR AND PP PACKAGING AVAILABILITY

CONSULT FACTORY FOR CONNECTORS BUILT TO YOUR SPECIFICATION

ELECTRONIC CONNECTOR SERVICE INC. 11880 WESTERN AVE. STANTON, CA 90680 TOLL FREE (877) ECS-CONN TEL (714) 895-6351 FAX (714) 894-1858
WWW.ECSCONN.COM

9400S Series Sockets
.079 [2.00] Low Profile SMT Socket

Specifications

Insulator Material: Glass filled polyester, Thermoplastic, 94V-O Nylon-6T, UL Recognized.
Contact Material: Phosphor Bronze
Contact Plating: Gold or Tin over .000050" Ni (See contact plating options)
Insulation Resistance: 5000 M ohms min.
Dielectric Withstand Voltage: 500 VAC
Current Rating: 1 AMP
Operating Temperature: -40°C To +105°C
Contact Resistance: 20 m ohms max.
Max Processing Temp.: 230°C for 60 seconds
UL File Numbers: E146967 & E176234

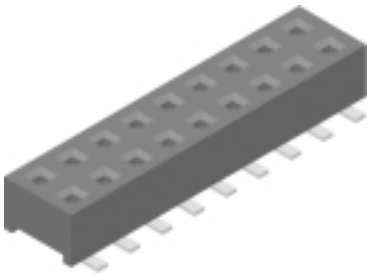

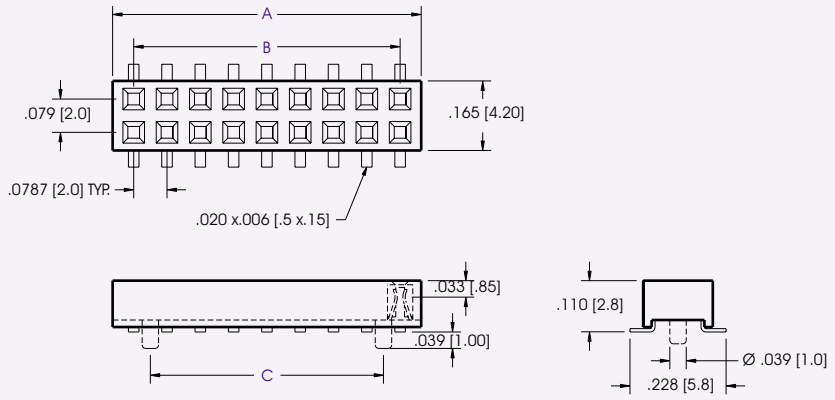

PCB LAYOUT

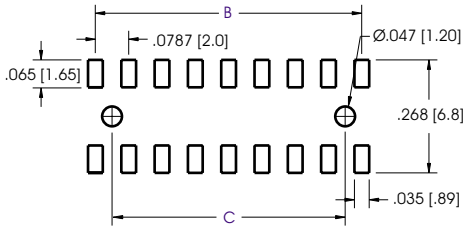

A = .016+.0787 x No. of Pos.
B = .0787 x (No. Of Cont./2 -1)
C = .0787 x (No. Of Cont./2 -2)

SUGGESTED MATING CONNECTORS

94XX-BX-XX-XX (PAGE F-22)
94XX-DX-XX-XX (PAGE F-23)
94XX-EX-XX-XX-X (PAGE F-24)

DIMENSIONS ARE IN INCHES & [MM]

PART NUMBERING

94 | XX | S — FL — XX — XX — XX

SERIES CODE
.079 SOCKETS

NO. OF CONTACTS
06 - 60

LOCATING PEG
00 = WITHOUT LOCATING PEG
01 = WITH LOCATING PEG

CONTACT PLATING
.000050" Nickel underplate

	MATING	TAIL
00 =	100µ"Sn	100µ"Sn
03 =	Au Flash	Au Flash
80 =	10µ"Au	10µ"Au
85 =	15µ"Au	15µ"Au
90 =	30µ"Au	30µ"Au

PACKAGING
TR = TAPE & REEL PACKAGING
PP = PICK AND PLACE PAD
BLANK = STANDARD PACKAGING
CONSULT FACTORY FOR TR AND PP PACKAGING AVAILABILITY

CONSULT FACTORY FOR CONNECTORS BUILT TO YOUR SPECIFICATION

9400S Series Sockets
.079 [2.00] IDC Socket

Specifications

Insulator Material: Glass filled polyester, Type PBT, 94V-O Nylon-6T, UL Recognized.
Contact Material: Phosphor Bronze
Contact Plating: .000050" Ni underplate
Contact Area - Gold Flash
Termination Area - Tin
Insulation Resistance: 5000 M ohms min.
Dielectric Withstand Voltage: 500 VAC
Current Rating: 1 AMP
Operating Temperature: -40°C To +105°C
Contact Resistance: 20 m ohms max.
UL File Numbers: E146967 & E176234

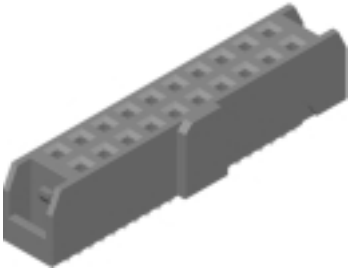

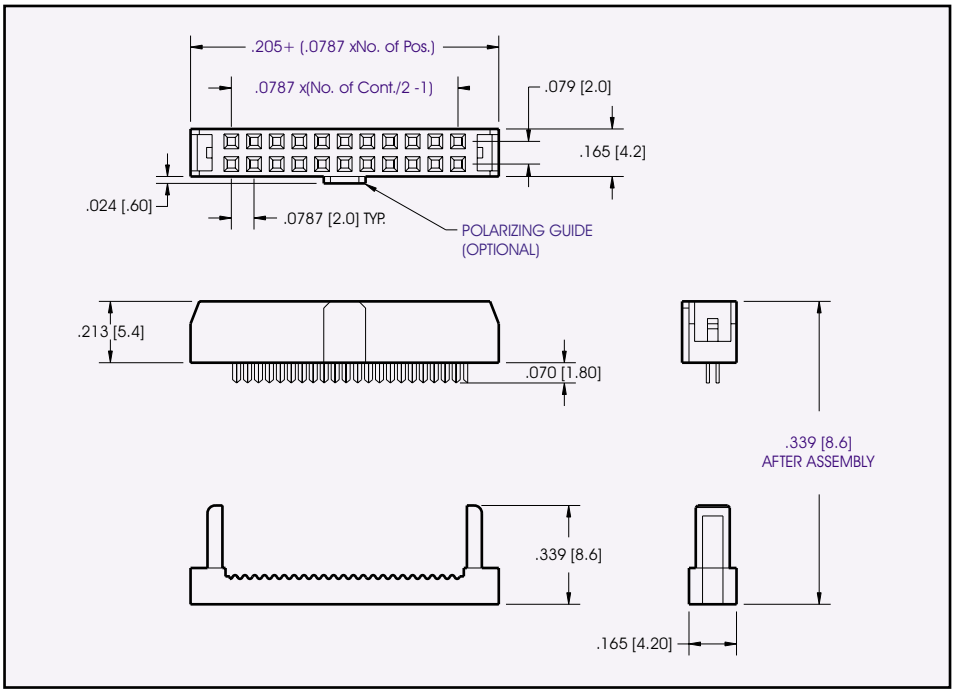

DIMENSIONS ARE IN INCHES & [MM]

PART NUMBERING

94 XX S — G X — 11 — 01

SERIES CODE
.079 HEADERS

NO. OF CONTACTS
10 - 40, 44, 48, 50, 54
56, 60, 62, 64, 68

POLARIZING GUIDE
0 = WITHOUT POLARIZING
1 = WITH POLARIZING

SUGGESTED MATING CONNECTORS
94XX-FX-XX-XX (PAGE F-25)
94XX-BX-XX-XX (PAGE F-22)
94XX-DX-XX-XX (PAGE F-23)

CONSULT FACTORY FOR CONNECTORS BUILT TO YOUR SPECIFICATION

9400S Series Sockets
.079 [2.00] 4 Row Socket

Specifications

Insulator Material: Glass filled polyester, Thermoplastic, 94V-O Nylon-6T, UL Recognized.
Contact Material: Phosphor Bronze
Contact Plating: Gold and/or Tin over .000050" Ni (See contact plating options)
Insulation Resistance: 5000 M ohms min.
Dielectric Withstand Voltage: 500 VAC
Current Rating: 1 AMP
Operating Temperature: -40°C To +105°C
Contact Resistance: 20 m ohms max.
Max Processing Temp.: 230°C for 60 seconds
UL File Numbers: E146967 & E176234

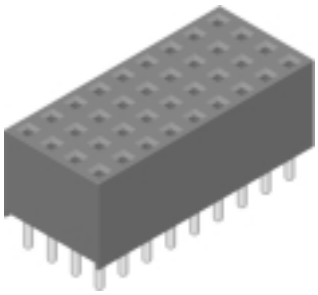

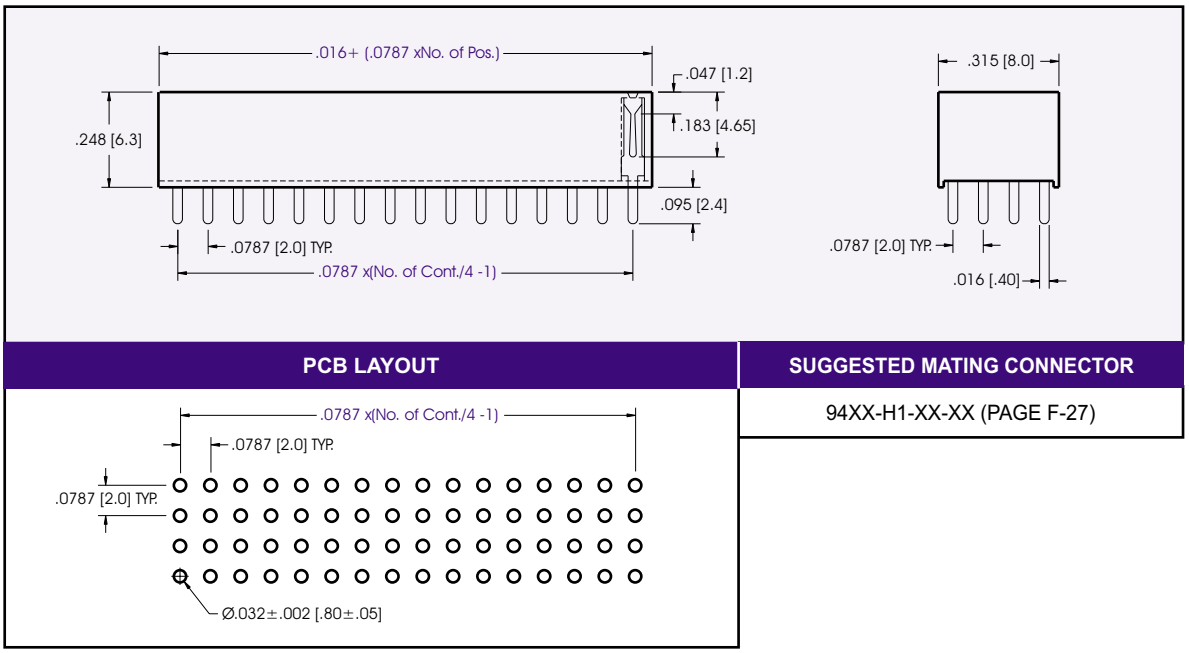

DIMENSIONS ARE IN INCHES & [MM]

PART NUMBERING

94 | XX | S — H1 — 11 — XX

SERIES CODE
.079 SOCKETS

NO. OF CONTACTS
24 - 96
100 CONTACTS = 01
104 CONTACTS = 02
108 CONTACTS = 03
112 CONTACTS = 04
116 CONTACTS = 05
120 CONTACTS = 06

CONTACT PLATING
.000050" Nickel underplate

	CONTACT	TAIL
00	= 100µ"Sn	100µ"Sn
01	= Au Flash	100µ"Sn
03	= Au Flash	Au Flash
10	= 10µ"Au	100µ"Sn
30	= 30µ"Au	100µ"Sn

CONSULT FACTORY FOR CONNECTORS BUILT TO YOUR SPECIFICATION

ELECTRONIC CONNECTOR SERVICE INC. 11880 WESTERN AVE. STANTON, CA 90680 TOLL FREE (877) ECS-CONN TEL (714) 895-6351 FAX (714) 894-1858
WWW.ECSCONN.COM

9300 Series Headers
.100 Centers Strip Headers

Specifications

Insulator Material: Glass filled polyester, Type PBT, 94V-O, UL Recognized.
Contact Material: Copper Alloy
Contact Plating: Gold and/or Tin over .000050" Ni (See contact plating options).
Current Rating: 3 amps at 30°C
Insulation Resistance: 5000 M ohms min.
Dielectric Withstand Voltage: 1000 VAC
Press-Fit Section Insertion Force: 40 lbs max per contact
Press-Fit Section Withdrawal Force: 10 lbs min per contact
Hole Size Requirements:
Drilled Hole Dia.: .0453± .001
Plating: .001 to .003 copper and .0003 min Tin/Lead.
Finished Hole Diameter: .040 ± .003

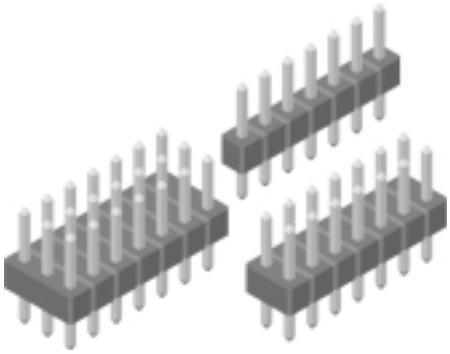

Recognized under the recognized component Program of Underwriters Laboratories, Inc.
File Numbers: E146967 and E176234

SUGGESTED MATING CONNECTORS
SINGLE ROW: 93XXS-AX-XX-XX (PAGE F-45) 93XXS-EX-11-XX (PAGE F-47)
DOUBLE ROW: 93XXS-BX-XX-XX (PAGE F-45) 93XXS-FX-XX-XX (PAGE F-48)
TRIPLE ROW: 93XXS-CX-XX-XX (PAGE F-45) 93XXS-DX-11-XX (PAGE F-45)

CONTACT/TAIL LENGTH OPTIONS

STRAIGHT SOLDER

P/N CODE	CONTACT	TAIL
01	.230 [5.84]	.120 [3.05]
02	.230 [5.84]	.230 [5.84]
03	.230 [5.84]	.320 [8.13]
04	.230 [5.84]	.420 [10.67]
05	.230 [5.84]	.520 [13.21]
06	.230 [5.84]	.620 [15.75]
07	.230 [5.84]	.720 [18.29]
08	.230 [5.84]	.820 [20.83]
09	.318 [8.08]	.120 [3.05]
10	.318 [8.08]	.220 [5.59]
11	.318 [8.08]	.320 [8.13]
12	.318 [8.08]	.420 [10.67]
13	.318 [8.08]	.520 [13.21]
14	.120 [3.05]	.120 [3.05]
15	.120 [3.05]	.260 [6.60]
16	.120 [3.05]	.610 [15.49]
19	.100 [2.54]	.540 [13.72]

RIGHT ANGLE

P/N CODE	CONTACT	TAIL
01	.230 [5.84]	.100 [2.54]
02	.230 [5.84]	.200 [5.08]
03	.230 [5.84]	.300 [7.62]
04	.230 [5.84]	.400 [10.16]
05	.230 [5.84]	.500 [12.70]
06	.230 [5.84]	.600 [15.24]
07	.230 [5.84]	.700 [17.78]
08	.318 [8.08]	.100 [2.54]
09	.318 [8.08]	.200 [5.08]
10	.318 [8.08]	.300 [7.62]
11	.318 [8.08]	.400 [10.16]

PRESS-FIT STRAIGHT

P/N CODE	CONTACT	TAIL
10	.330 [8.38]	.180 [4.57]
14	.120 [3.05]	.180 [4.57]
17	.710 [18.03]	.180 [4.57]
18	.230 [5.84]	.180 [4.57]

DIMENSIONS ARE IN INCHES & [MM]

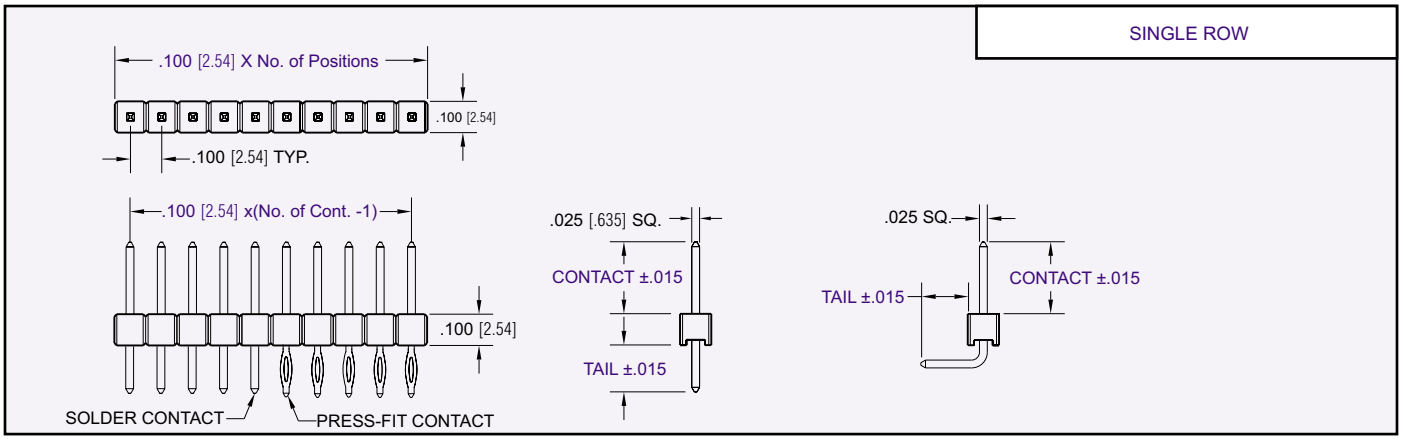

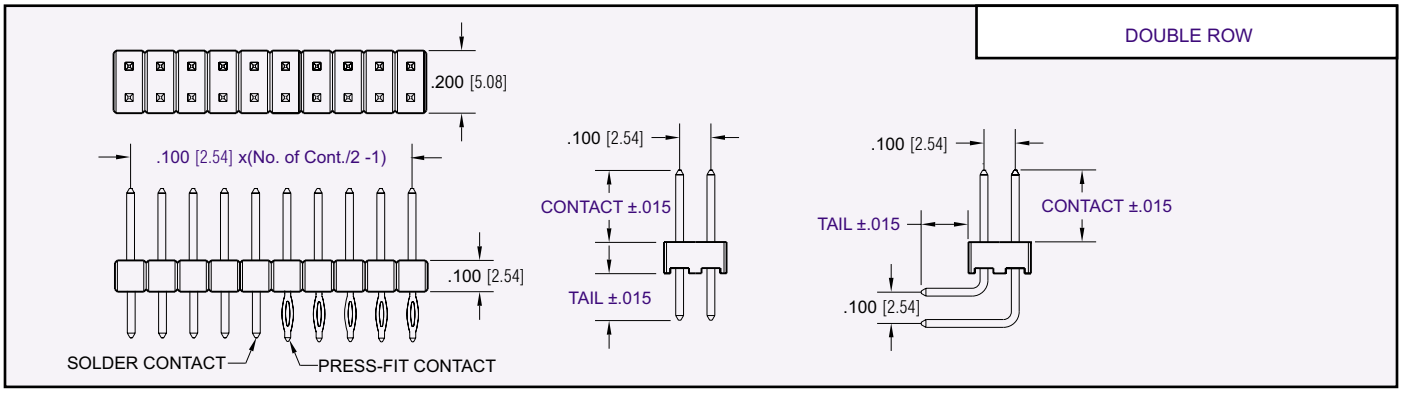

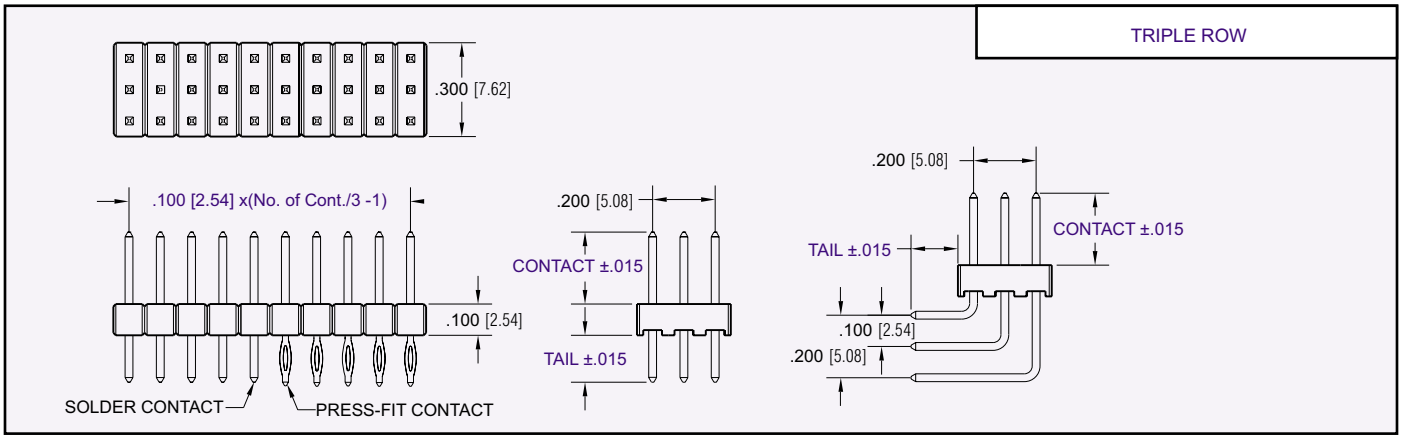

PART NUMBERING

93 | XX — X | X — XX — XX — X | X

SERIES CODE
.100 HEADERS

NO. OF CONTACTS
SINGLE ROW = 01 - 36
DOUBLE ROW = 02 - 72
TRIPLE ROW = 09 - 120

NO. OF ROWS
1 = SINGLE ROW
2 = DOUBLE ROW
3 = TRIPLE ROW
4 = TRIPLE ROW WITH MIDDLE ROW NOT LOADED

TERMINATION TYPE
1 = STRAIGHT TERMINATION
2 = RIGHT ANGLE TERMINATION

TAIL STYLE
SEE TABLE

CONTACT PLATING
.000050" Nickel underplate

	CONTACT	TAIL
00	= 100µ" Sn	100µ"Sn
01	= Au Flash	100µ"Sn
03	= Au Flash	Au Flash
10	= 10µ"Au	100µ"Sn
20	= 15µ"Au	100µ"Sn
30	= 30µ"Au	100µ"Sn

P = PRESS FIT
BLANK FOR SOLDER
LL = RETAINING LEAD (SOLDER VERSION)

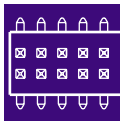

9300 Series Headers
.100 [2.54] Single Row SMT Headers

Specifications

Insulator Material: Glass filled polyester, Type PBT, 94V-O Nylon-6T, UL Recognized.
Contact Material: Brass
Contact Plating: Gold and/or Tin over .000050" Ni (See contact plating options).
Insulation Resistance: 5000 M ohms min.
Dielectric Withstand Voltage: 1000 VAC
Current Rating: 3 AMP
Max. Processing Temp.: 230°C for 30 seconds
Operating Temperature: -40°C To +125°C
UL File Numbers: E146967 & E176234

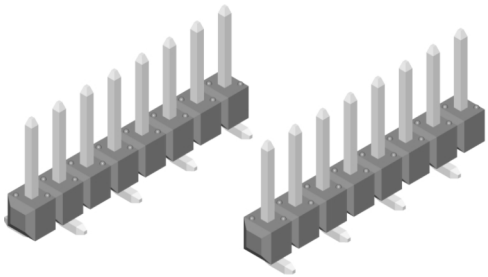

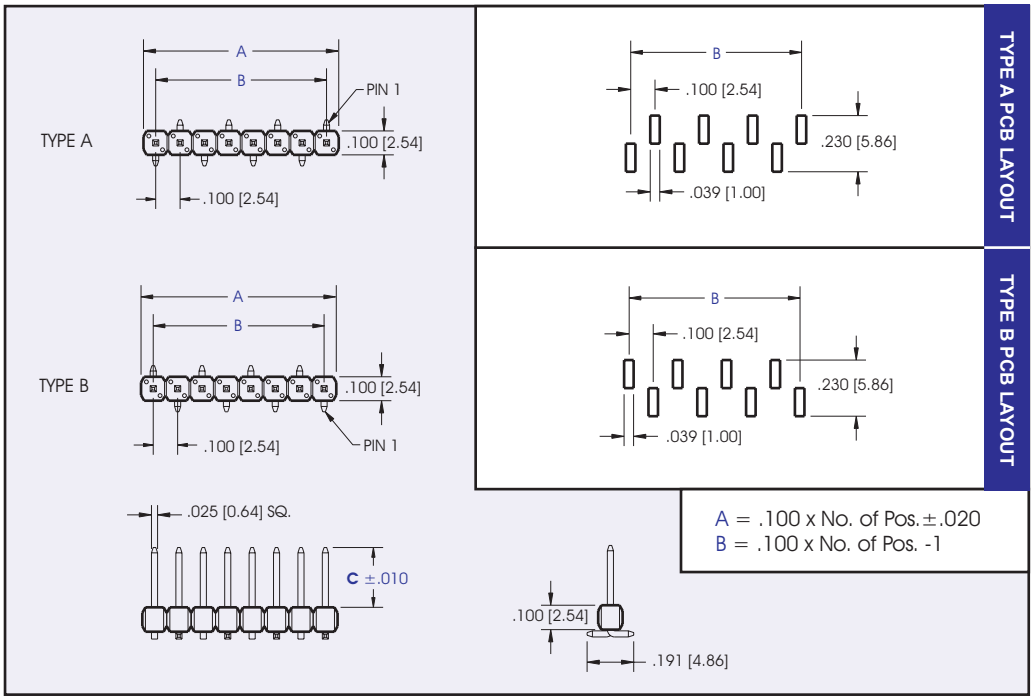

DIMENSIONS ARE IN INCHES [MM]

PART NUMBERING

93 | XX — 13 — XX — XX — X | XX

SERIES CODE
.100 HEADERS

NO. OF CONTACTS
02 - 40

DIMENSION "C"
01 = .230 [5.84]
02 = .320 [8.13]
CONSULT FACTORY FOR OTHER OPTIONS

CONTACT PLATING
.000050" Nickel underplate

	CONTACT	TAIL
00	= 100µ"Sn	100µ"Sn
01	= Au Flash	100µ"Sn
03	= Au Flash	Au Flash
10	= 10µ"Au	100µ"Sn
30	= 30µ"Au	100µ"Sn

CONNECTOR TYPE
1 = TYPE A
2 = TYPE B

PACKAGING
TR = TAPE & REEL PACKAGING
PP = PICK AND PLACE PAD
BLANK = STANDARD PACKAGING
CONSULT FACTORY FOR TR AND PP PACKAGING AVAILABILITY

SUGGESTED MATING CONNECTORS

93XXS-AX-XX-XX (PAGE F-37)
93XXS-EX-XX-XX (PAGE F-47)

CONSULT FACTORY FOR CONNECTORS BUILT TO YOUR SPECIFICATION

9300 Series Headers
.100 [2.54] Dual Row SMT

Specifications

Insulator Material: Glass filled polyester, Thermoplastic, 94V-O Nylon-6T, UL Recognized.
Contact Material: Copper Alloy
Contact Plating: Gold and/or Tin over .000050" Ni (See contact plating options).
Insulation Resistance: 5000 M ohms min.
Dielectric Withstand Voltage: 1000 VAC
Current Rating: 3 AMPS
Max. Processing Temp.: 230°C for 60 seconds
Operating Temperature: -40°C To +105°C
UL File Numbers: E146967 & E176234

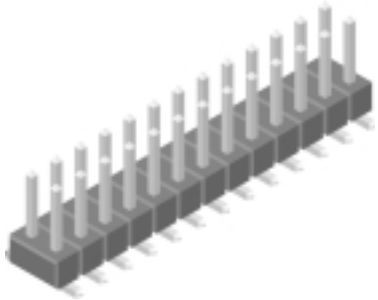

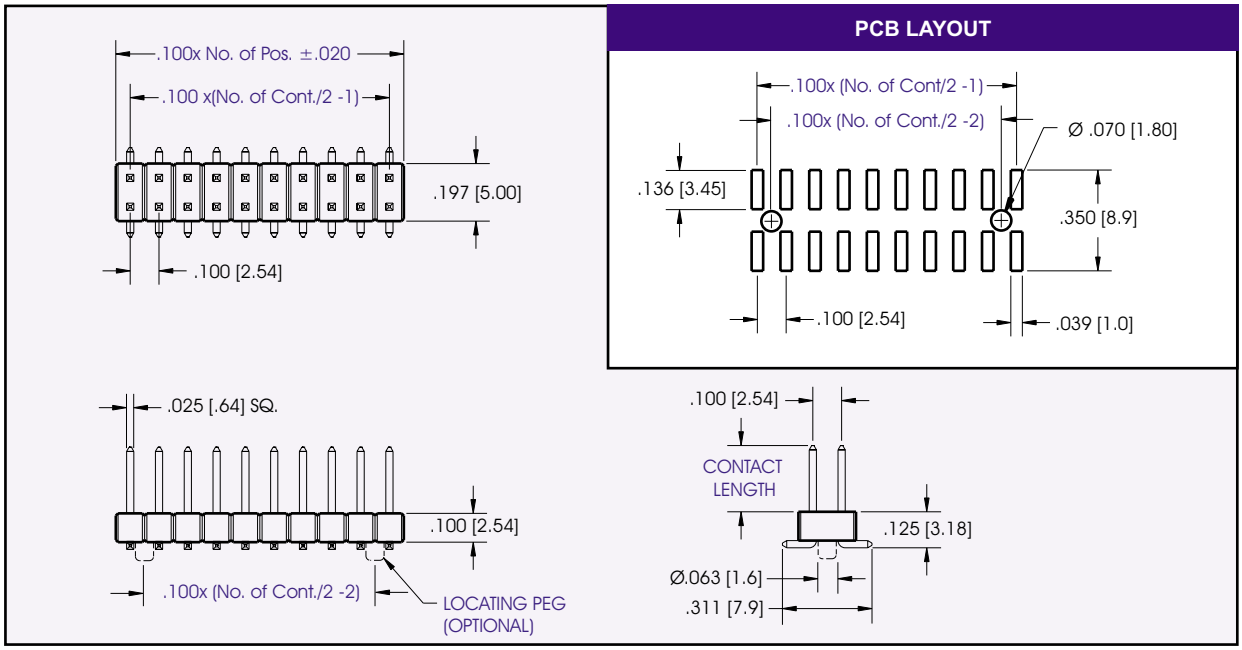

ALL DIMENSIONS ARE IN INCHES [MM]

PART NUMBERING

93 XX — 23 — XX — XX — X XX

SERIES CODE
.100 HEADERS

NO. OF CONTACTS
06 - 64

CONTACT LENGTH
01 = .230 [5.84]
02 = .320 [8.13]
03 = .420 [10.67]
CONSULT FACTORY FOR OTHER CONTACT LENGTH OPTIONS

CONTACT PLATING
.000050" Nickel underplate

	CONTACT	TAIL
00	= 100µ"Sn	100µ"Sn
01	= Au Flash	100µ"Sn
03	= Au Flash	Au Flash
10	= 10µ"Au	100µ"Sn
30	= 30µ"Au	100µ"Sn

LOCATING PEG
1 = WITH LOCATING PEG
BLANK = WITHOUT LOCATING PEG

PACKAGING
TR = TAPE & REEL PACKAGING
PP = PICK AND PLACE PAD
BLANK = STANDARD PACKAGING
CONSULT FACTORY FOR TR AND PP PACKAGING AVAILABILITY

SUGGESTED MATING CONNECTORS

93XXS-BX-XX-XX (PAGE F-45)
93XXS-FX-XX-XX (PAGE F-48)

CONSULT FACTORY FOR CUSTOM CONNECTORS BUILT TO YOUR SPECIFICATION

9300 Series Headers
.100 [2.54] Stacking Headers

Specifications

Insulator Material: Glass filled polyester, Type PBT, 94V-O, UL Recognized.
Contact Material: Copper Alloy
Contact Plating: Gold and/or Tin over .000050" Ni (See contact plating options).
Insulation Resistance: 5000 M ohms min.
Dielectric Withstand Voltage: 1000 VAC
Current Rating: 3 AMPS
Operating Temp.: -40º to +105ºC
UL File Numbers: E146967 & E176234

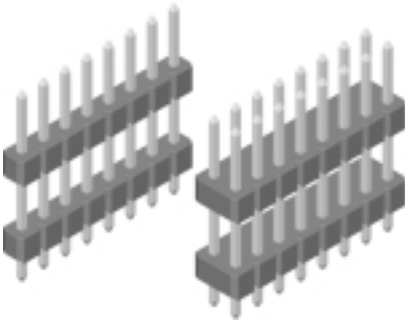

SINGLE ROW

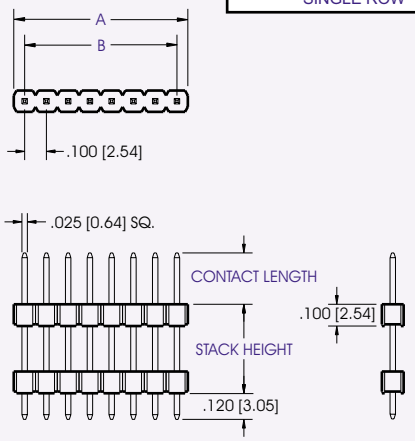

PCB LAYOUT

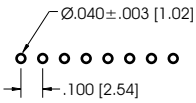

A = .100 x No. of Pos.±.020
B = .100 x (No. of Cont./2 -1)

SUGGESTED MATING CONNECTORS

93XXS-AX-XX-XX (PAGE F-45)
93XXS-EX-XX-XX (PAGE F-47)

DOUBLE ROW

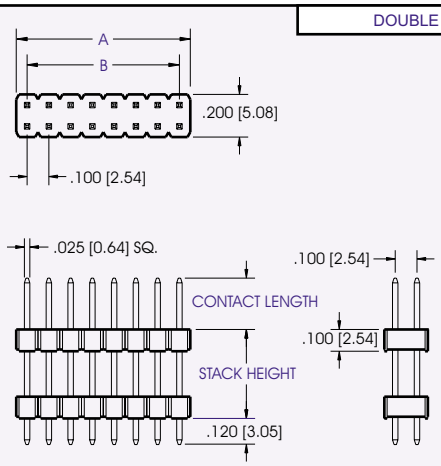

PCB LAYOUT

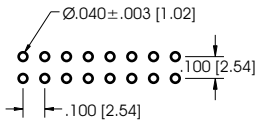

A = .100 x No. of Pos.±.020
B = .100 x (No. of Cont./2 -1)

SUGGESTED MATING CONNECTORS

93XXS-BX-XX-XX (PAGE F-45)
93XXS-FX-XX-XX (PAGE F-48)

ALL DIMENSIONS ARE IN INCHES [MM]

PART NUMBERING

93 XX — X 4 — XX — XX — XXXX

SERIES CODE
.100 HEADERS

NO. OF CONTACTS
SINGLE ROW: 02 - 40
DOUBLE ROW: 04 - 80

NO. OF ROWS
1 = SINGLE ROW
2 = DOUBLE ROW

CONTACT LENGTH
01 = .230 [5.84]
09 = .320 [8.13]
14 = .120 [3.05]
CONSULT FACTORY FOR OTHER CONTACT LENGTH OPTIONS

CONTACT PLATING
.000050" Nickel underplate

CONTACT	TAIL
00 = 100µ"Sn	100µ"Sn
01 = Au Flash	100µ"Sn
03 = Au Flash	Au Flash
10 = 10µ"Au	100µ"Sn
30 = 30µ"Au	100µ"Sn

STACK HEIGHT
EX 0.600 = 0600
EX 1.200 = 1200

CONSULT FACTORY FOR CUSTOM CONNECTORS BUILT TO YOUR SPECIFICATION

9300 Series Headers
.100 [2.54] Box Headers

Specifications

Insulator Material: Glass filled polyester, Type PBT 94V-O, UL Recognized.
Contact Material: Copper Alloy
Contact Plating: Gold and/or Tin over .000050" Ni (See contact plating options).
Insulation Resistance: 5000 M ohms min.
Dielectric Withstand Voltage: VAC 1000
Current Rating: 3 AMP
Operating Temperature: -40°C to +105°C
UL File Numbers: E146967 & E176234

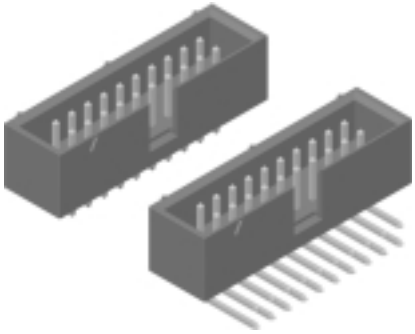

STRAIGHT TAIL

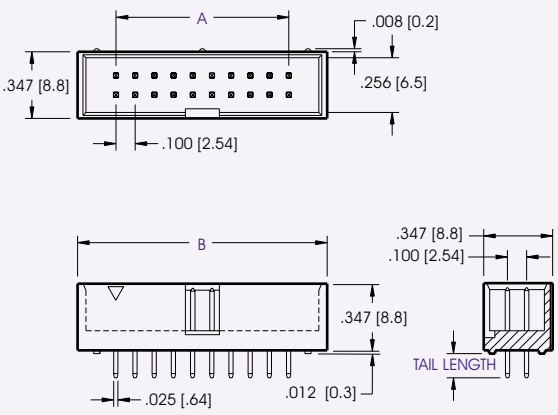

PCB LAYOUT

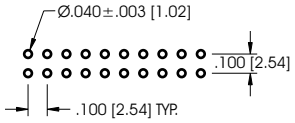

A = .100 x (No. of Cont./2 -1)
B = .301 +.100 x No. of Pos.

RIGHT ANGLE

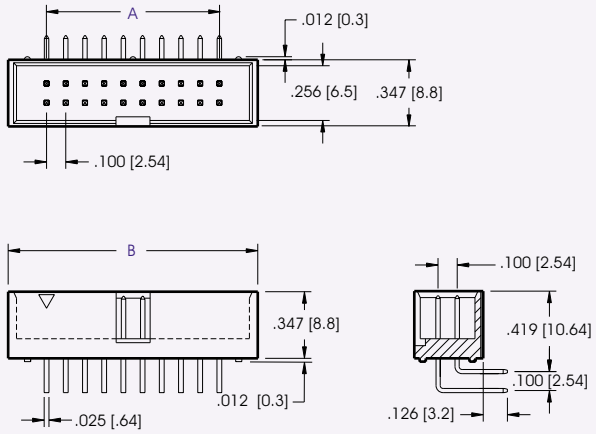

PCB LAYOUT

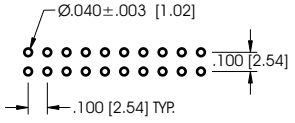

A = .100 x (No. of Cont./2 -1)
B = .301 +.100 x No. of Pos.

ALL DIMENSIONS ARE IN INCHES [MM]

SUGGESTED MATING CONNECTORS

93XXS-GX-X1-XX (PAGE F-49)
92XXS-XXX-XX (PAGE F-51)

PART NUMBERING

93 XX — B X — XX — XX

SERIES CODE
.100 HEADERS

NO. OF CONTACTS
06, 08, 10, 14, 16, 20, 24
26, 30, 34, 40, 44, 48, 50
60, 64

TAIL STYLE
1 = STRAIGHT
2 = RIGHT ANGLE

TAIL LENGTH
01 = .126 [3.20] STRAIGHT OR R/A
02 = .180 [4.57] STRAIGHT ONLY
03 = .179 [4.55] PRESS FIT, STRAIGHT ONLY
CONSULT FACTORY FOR OTHER CONTACT LENGTH OPTIONS

CONTACT PLATING
.000050" Nickel underplate

	CONTACT	TAIL
00 =	100µ"Sn	100µ" Sn
01 =	Au Flash	100µ" Sn
03 =	Au Flash	Au Flash
10 =	10µ"Au	100µ" Sn
30 =	30µ"Au	100µ" Sn

CONSULT FACTORY FOR CONNECTORS BUILT TO YOUR SPECIFICATION

ELECTRONIC CONNECTOR SERVICE INC. 11880 WESTERN AVE. STANTON, CA 90680 TOLL FREE (877) ECS-CONN TEL (714) 895-6351 FAX (714) 894-1858
WWW.ECSCONN.COM

9300 Series Headers
.100 [2.54] SMT Box Header

Specifications

Insulator Material: Glass filled polyester, Thermoplastic, 94V-O Nylon-6T, UL Recognized.
Contact Material: Copper Alloy
Contact Plating: Gold and/or Tin over .000050" Ni (See contact plating options).
Insulation Resistance: 5000 M ohms min.
Dielectric Withstand Voltage: 1000 VAC
Current Rating: 3 AMPS
Operating Temperature: -40°C To +105°C
Max. Operating Temp.: 230°C for 60 seconds
UL File Numbers: E146967 & E176234

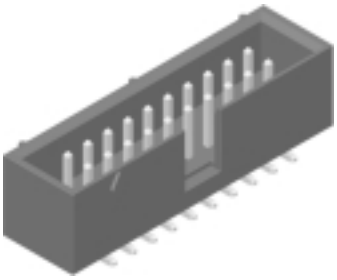

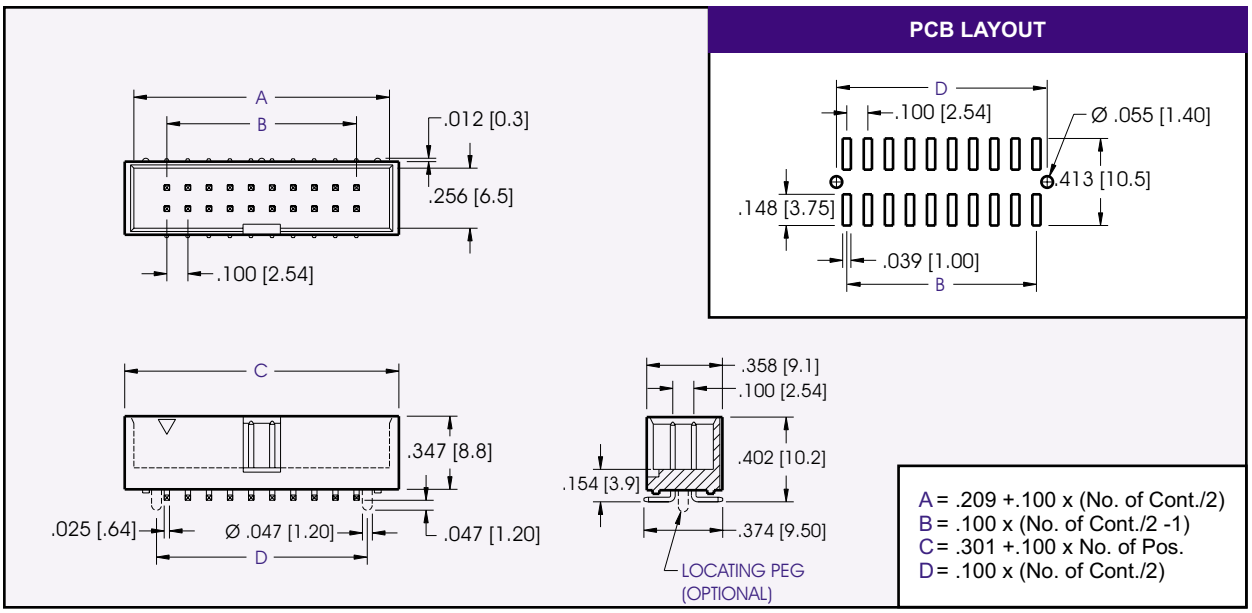

ALL DIMENSIONS ARE IN INCHES [MM]

PART NUMBERING

93 | XX — B3 — XX — XX — XX

SERIES CODE
.100 HEADERS

NO. OF CONTACTS
20, 40, 44

LOCATING PEG
00 = WITHOUT LOCATING PEG
01 = WITH LOCATING PEG (20 PIN ONLY)

CONTACT PLATING
.000050" Nickel underplate

	MATING	TAIL
00	100µ"Sn	100µ"Sn
01	Au Flash	100µ"Sn
03	Au Flash	Au Flash
10	10µ"Au	100µ"Sn
30	30µ"Au	100µ"Sn

PACKAGING
TR = TAPE & REEL PACKAGING
PP = PICK AND PLACE PAD
BLANK = STANDARD PACKAGING
CONSULT FACTORY FOR TR AND PP PACKAGING AVAILABILITY

SUGGESTED MATING CONNECTORS

93XXS-GX-XX-XX	(PAGE F-49)
92XXS-XXX-XX	(PAGE F-51)

CONSULT FACTORY FOR CONNECTORS BUILT TO YOUR SPECIFICATION

9300 Series Headers
.100 [2.54] Elevated Box Header

Specifications

Insulator Material: Glass filled polyester, Type PBT, 94V-O, UL Recognized.
Contact Material: Copper Alloy
Contact Plating: Gold and/or Tin over .000050" Ni (See plating options).
Insulation Resistance: 5000 M ohms min.
Dielectric Withstand Voltage: 1000 VAC
Current Rating: 3 AMPS
Operating Temperature: -40°C To +105°C
UL File Numbers: E146967 & E176234

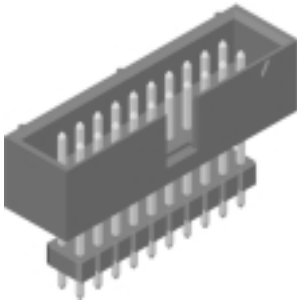

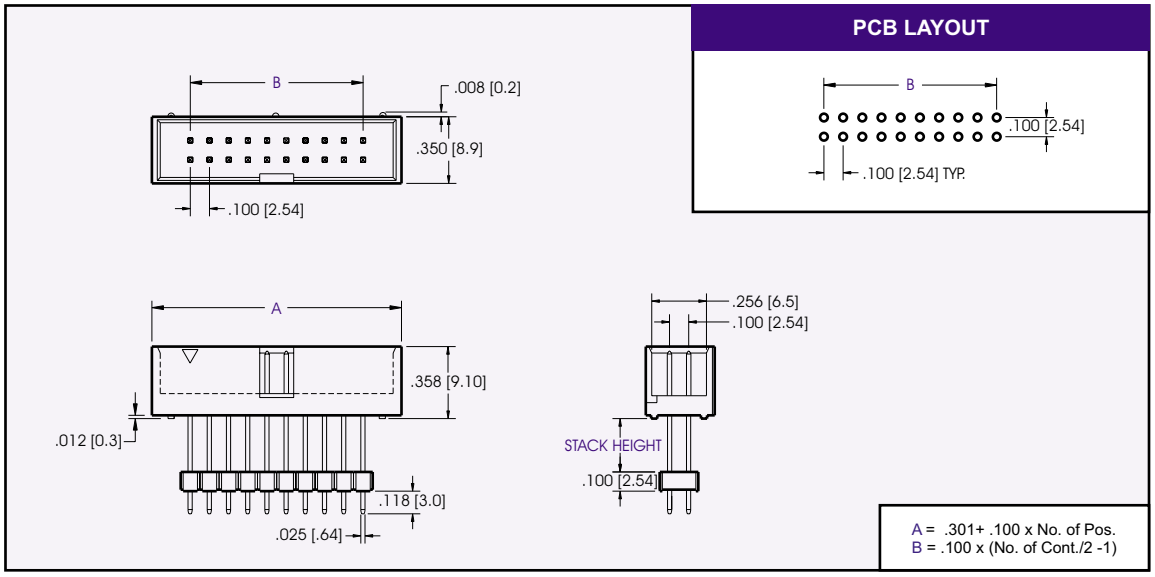

ALL DIMENSIONS ARE IN INCHES [MM]

SUGGESTED MATING CONNECTORS
93XXS-GX-XX-XX (F-49)
92XXS-XXX-XX (F-51)

PART NUMBERING

93 | XX — B5 — 11 — XX — XXXX

SERIES CODE
.100 HEADERS

NO. OF CONTACTS
06, 08, 10, 14, 16, 20
24, 26, 30, 34, 40, 44
48, 50, 60, 64

CONTACT PLATING
.000050" Nickel underplate

	CONTACT	TAIL
00	= 100µ"Sn	100µ"Sn
01	= Au Flash	100µ"Sn
03	= Au Flash	Au Flash
10	= 10µ"Au	100µ"Sn
30	= 30µ"Au	100µ"Sn

STACK HEIGHT
Ex.
.600 = 0600

CONSULT FACTORY FOR CONNECTORS BUILT TO YOUR SPECIFICATION

ELECTRONIC CONNECTOR SERVICE INC. 11880 WESTERN AVE. STANTON, CA 90680 TOLL FREE (877) ECS-CONN TEL (714) 895-6351 FAX (714) 894-1858
WWW.ECSCONN.COM

9300S Series Sockets
.100 [2.54] Strip Sockets

Specifications

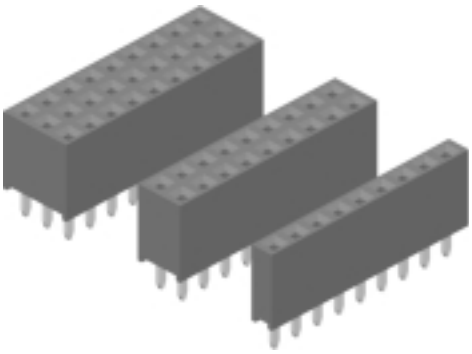

Insulator Material: Glass filled polyester, Type PBT 94V-O, UL Recognized.
Contact Material: Phosphor Bronze
Contact Plating: Gold and/or Tin over .000050" Ni (See contact plating options).
Insulation Resistance: 5000 M ohms min.
Dielectric Withstand Voltage: 1000 VAC
Current Rating: 3 AMP @ 80°C
Operating Temperature: -40°C To +105°C
Contact Resistance: 20 m ohms Max.
UL File Numbers: E146967 & E176234

SUGGESTED MATING CONNECTORS

SINGLE ROW:
93XX-1X-XX-XX (PAGE F-37)
93XX-13-XX-XX (PAGE F-39)
93XX-14-XX-XX-XXXX (PAGE F-41)

DOUBLE ROW:
93XX-2X-XX-XX (PAGE F-37)
93XX-24-XX-XX-XXXX (PAGE F-41)
93XX-23-XX-XX (PAGE F-40)

TRIPLE ROW:
93XX-3X-XX-XX (PAGE F-37)
93XX-4X-XX-XX (PAGE F-37)

TAIL LENGTH OPTIONS

STRAIGHT		RIGHT ANGLE	
P/N CODE	TAIL (A)	P/N CODE	TAIL (A)
01	.125 [3.18]	01	.134 [3.40]
02	.190 [4.83]	02	.200 [5.08]
03	.390 [9.91]	03	.300 [7.62]
04	.580 [14.73]	04	.400 [10.16]

RECOMMENDED PCB LAYOUTS

SINGLE ROW PCB LAYOUT

DOUBLE ROW PCB LAYOUT

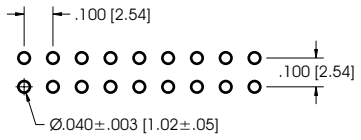

TRIPLE ROW PCB LAYOUT

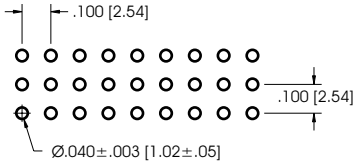

CONSULT FACTORY FOR CONNECTORS BUILT TO YOUR SPECIFICATION

ELECTRONIC CONNECTOR SERVICE INC. 11880 WESTERN AVE. STANTON, CA 90680 TOLL FREE (877) ECS-CONN TEL (714) 895-6351 FAX (714) 894-1858
WWW.ECSCONN.COM

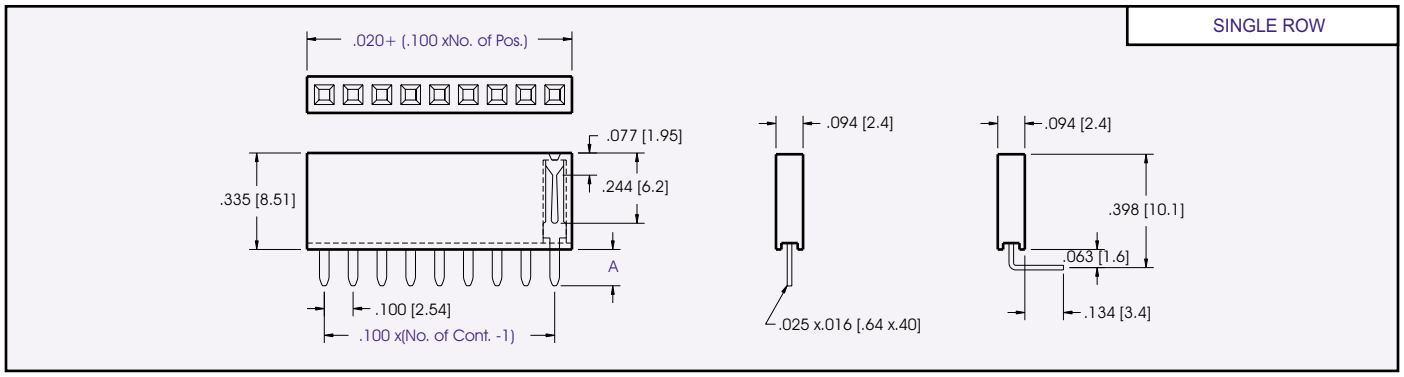

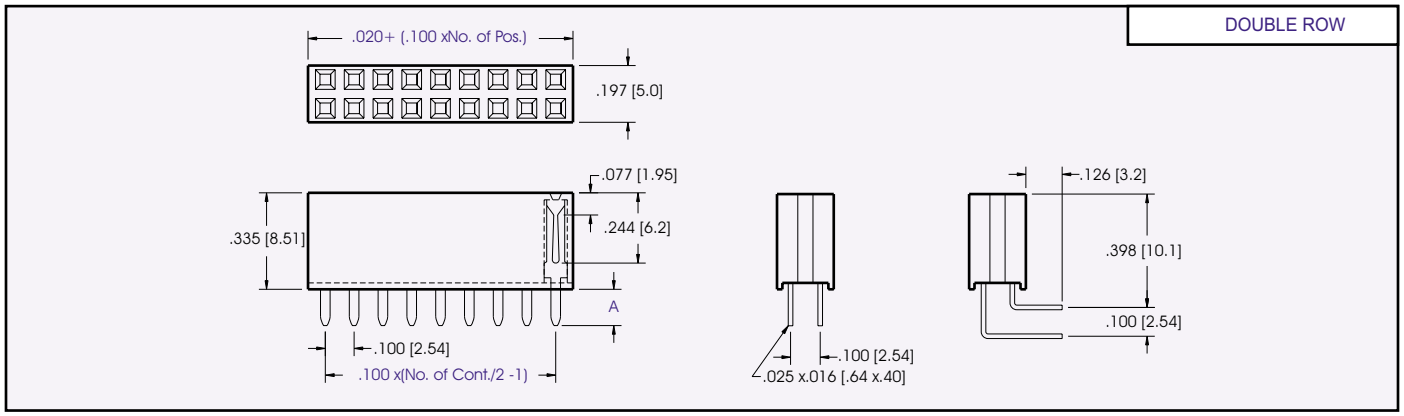

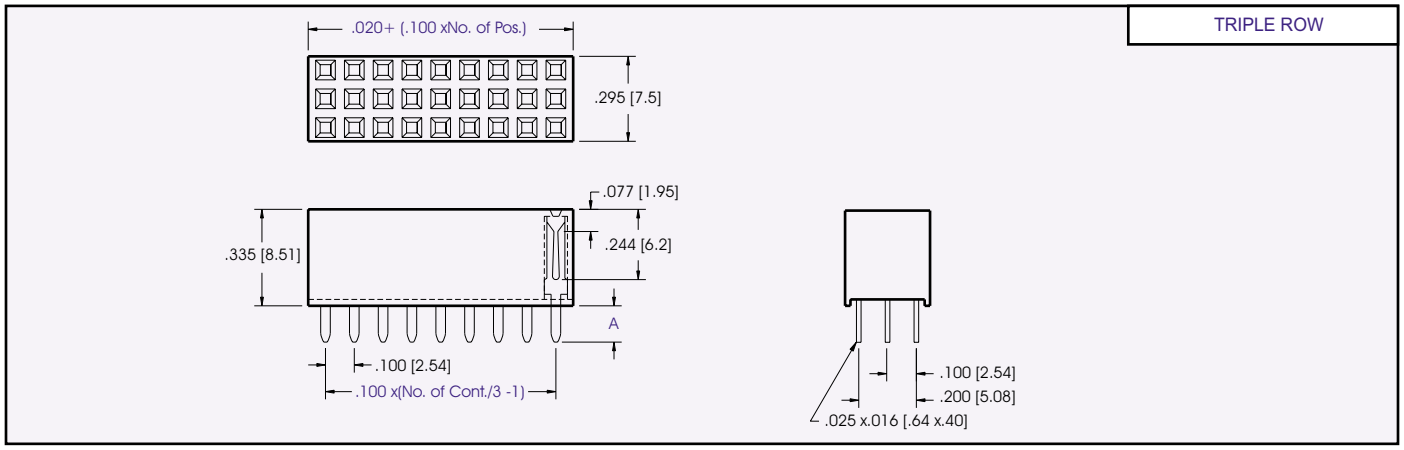

DIMENSIONS ARE IN INCHES & [MM]

PART NUMBERING

93 | XX | S — X | X — XX — XX — XX

SERIES CODE
.100 SOCKETS

NO. OF CONTACTS
SINGLE ROW: 02 - 40
DOUBLE ROW: 04 - 80
TRIPLE ROW: 09 - 96

CONNECTOR TYPE
A: SINGLE ROW
B: DOUBLE ROW
C: TRIPLE ROW
D: TRIPLE ROW WITH CENTER ROW REMOVED

TERMINATION TYPE
1 = STRAIGHT
2 = RIGHT ANGLE

TAIL LENGTH
SEE TAIL LENGTH OPTIONS

CONTACT PLATING
.000050" Nickel underplate

	CONTACT	TAIL
00	= 100µ"Sn	100µ"Sn
01	= Au Flash	100µ"Sn
03	= Au Flash	Au Flash
10	= 10µ"Au	100µ"Sn
30	= 30µ"Au	100µ"Sn

LOCKING LEADS
LL = WITH LOCKING LEADS
BLANK = WITHOUT LOCKING LEADS

CONSULT FACTORY FOR CONNECTORS BUILT TO YOUR SPECIFICATION

ELECTRONIC CONNECTOR SERVICE INC. 11880 WESTERN AVE. STANTON, CA 90680 TOLL FREE (877) ECS-CONN TEL (714) 895-6351 FAX (714) 894-1858
WWW.ECSCONN.COM

9300S Series Sockets
.100 [2.54] 1 Row SMT Socket

Specifications

Insulator Material: Glass filled polyester, Thermoplastic, 94V-O Nylon-6T, UL Recognized.
Contact Material: Phosphor Bronze
Contact Plating: Gold or Tin over .000050" Ni (See contact plating options)
Insulation Resistance: 5000 M ohms min.
Contact Resistance: 20 m ohms max.
Dielectric Withstand Voltage: 1000 VAC
Current Rating: 3 AMP
Operating Temperature: -40°C To +105°C
Max Processing Temp.: 230°C for 60 seconds
UL File Numbers: E146967 & E176234

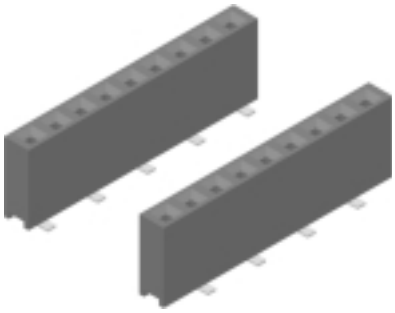

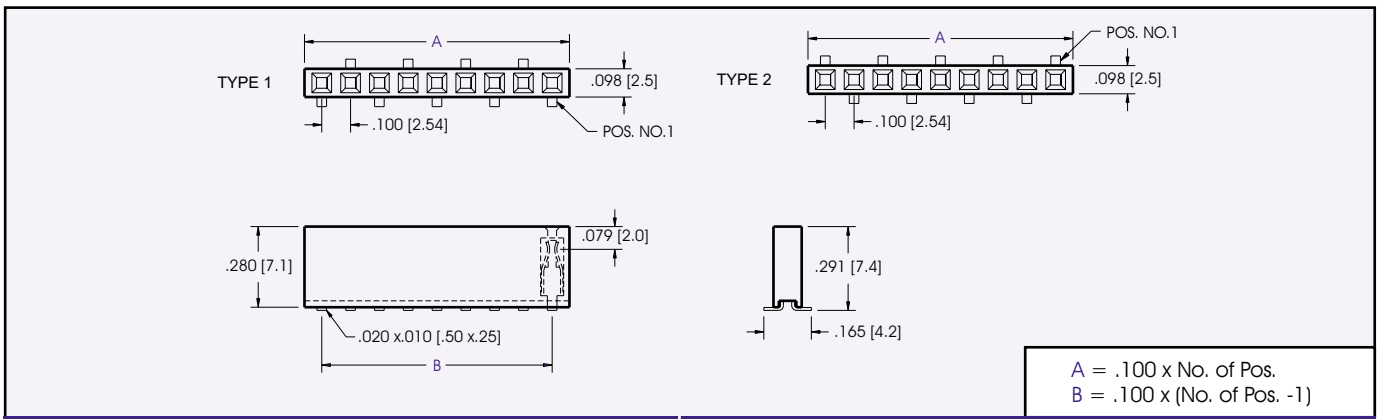

PCB LAYOUT TYPE 1

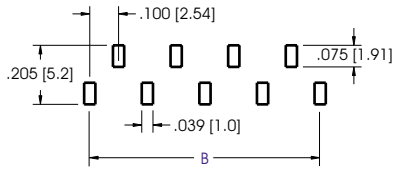

PCB LAYOUT TYPE 2

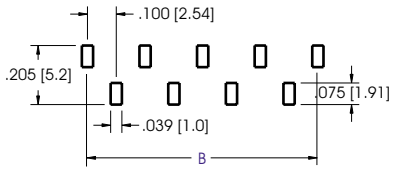

DIMENSIONS ARE IN INCHES & [MM]

PART NUMBERING

93 | XX | S — E | X — 11 — XX — XX

SERIES CODE
.100 SOCKETS

NO. OF CONTACTS
03 - 40

CONNECTOR TYPE
1 = TYPE 1
2 = TYPE 2

CONTACT PLATING
.000050" Nickel underplate

	CONTACT	TAIL
00	= 100µ"Sn	100µ"Sn
03	= Au Flash	Au Flash
80	= 10µ"Au	10µ"Au
90	= 30µ"Au	30µ"Au

PACKAGING
TR = TAPE & REEL PACKAGING
PP = PICK AND PLACE PAD
BLANK = STANDARD PACKAGING
CONSULT FACTORY FOR TR AND PP PACKAGING AVAILABILITY

SUGGESTED MATING CONNECTORS

93XXS-1X-XX-XX	(PAGE F-37)
93XXS-13-XX-XX	(PAGE F-39)
93XXS-14-XX-XX-XXXX	(PAGE F-41)

CONSULT FACTORY FOR CONNECTORS BUILT TO YOUR SPECIFICATION

9300S Series Sockets
.100 x .100 SMT Strip Socket

Specifications

Insulator Material: Glass filled polyester, Thermoplastic, 94V-O Nylon-6T, UL Recognized.
Contact Material: Phosphor Bronze
Contact Plating: Gold or Tin over .000050" Ni (See contact plating options)
Insulation Resistance: 5000 M ohms min.
Dielectric Withstand Voltage: 1000 VAC
Current Rating: 3 AMP
Operating Temperature: -40°C To +105°C
Contact Resistance: 20 m ohms max.
Max Processing Temp.: 230°C for 60 seconds
UL File Numbers: E146967 & E176234

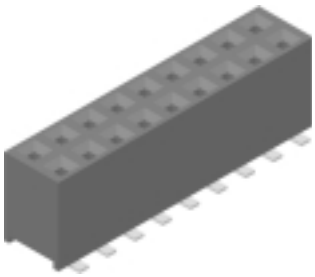

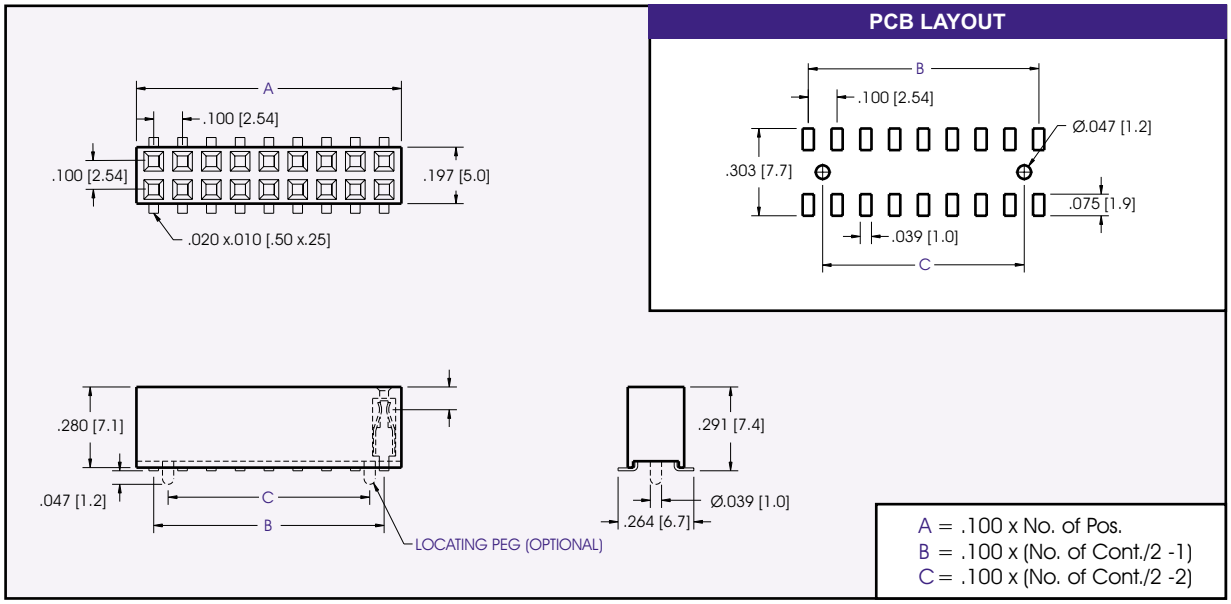

DIMENSIONS ARE IN INCHES & [MM]

PART NUMBERING

93 XX S — F X — 11 — XX — XX

SERIES CODE
.100 SOCKETS

NO. OF CONTACTS
04 - 80

LOCATING PEG
1 = WITH LOCATING PEG
2 = NO LOCATING PEG

CONTACT PLATING
.000050" Nickel underplate

	CONTACT	TAIL
00	= 100µ"Sn	100µ"Sn
03	= Au Flash	Au Flash
80	= 10µ"Au	10µ"Au
85	= 15µ"Au	15µ"Au
90	= 30µ"Au	30µ"Au

PACKAGING
TR = TAPE & REEL PACKAGING
PP = PICK AND PLACE PAD
BLANK = STANDARD PACKAGING
CONSULT FACTORY FOR TR AND PP PACKAGING AVAILABILITY

SUGGESTED MATING CONNECTORS

93XXS-2X-XX-XX (PAGE F-37)
93XXS-23-XX-XX (PAGE F-40)
93XXS-24-XX-XX (PAGE F-41)

9300S Series Sockets
.100 x .100 Socket with Polarizing

Specifications

Insulator Material: Glass filled polyester, Type PBT 94V-O, UL Recognized.
Contact Material: Phosphor Bronze
Contact Plating: Gold and/or Tin over .000050" Ni (See contact plating options)
Insulation Resistance: 5000 M ohms min.
Contact Resistance: 20 m ohms max.
Dielectric Withstand Voltage: 1000 VAC
Current Rating: 3 AMPS
Operating Temperature: -40°C To +105°C
UL File Numbers: E146967 & E176234

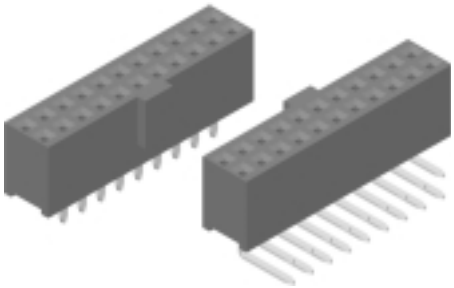

A = .197 + .100 x No. of Pos.
B = .100 x (No. of Cont./2 -1)

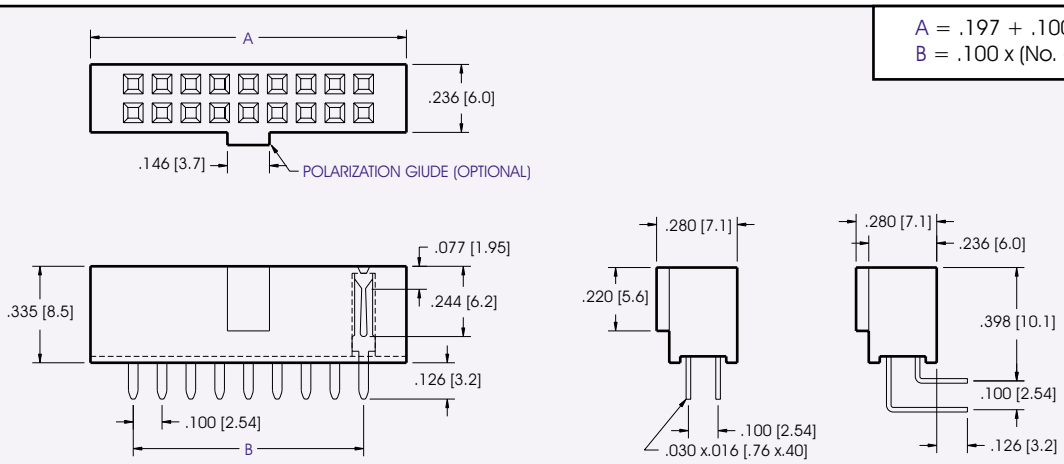

PCB LAYOUT	SUGGESTED MATING CONNECTORS
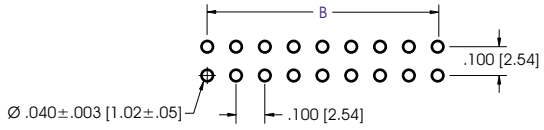	93XXS-BX-XX-XX (PAGE F-42) 93XXS-B3-XX-XX (PAGE F-43) 93XXS-B5-XX-XX-XXX (PAGE F-44)

DIMENSIONS ARE IN INCHES &[MM]

PART NUMBERING

93 XX S — G X — X 1 — XX

SERIES CODE
.100 SOCKETS

NO. OF CONTACTS
06, 08, 10, 14, 16, 20
24, 26, 30, 34, 40, 44,
48, 50, 60

TERMINATION TYPE
1 = STRAIGHT
2 = RIGHT ANGLE

POLARIZING GIUDE
1 = WITH POLARIZING GUIDE
2 = WITHOUT POLARIZING GUIDE

CONTACT PLATING
.000050" Nickel underplate

	CONTACT	TAIL
00	100µ"Sn	100µ"Sn
01	Au Flash	100µ"Sn
03	Au Flash	Au Flash
10	10µ"Au	100µ"Sn
30	30µ"Au	100µ"Sn

CONSULT FACTORY FOR CUSTOM CONNECTORS BUILT TO YOUR SPECIFICATION

ELECTRONIC CONNECTOR SERVICE INC. 11880 WESTERN AVE. STANTON, CA 90680 TOLL FREE (877) ECS-CONN TEL (714) 895-6351 FAX (714) 894-1858
WWW.ECSCONN.COM

9200S Series IDC Flat
Ribbon Cable Socket .100 [2.54]

Specifications

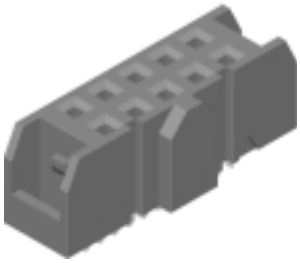

Insulator Material: Glass filled polyester, Type PBT, 94V-O, UL Recognized.
Contact Material: Copper Alloy
Contact Plating: Gold and/or Tin over .000050" Ni (See contact plating options).
Insulation Resistance: 5000 M ohms min.
Dielectric Withstand Voltage: 1000 VAC
Contact Resistance: 20 m ohms max.
Current Rating: 3 AMP
Operating Temperature: -40°C To +105°C
Recommended Cable: 26 or 28 AWG Flat Cable
UL File Numbers: E146967 & E176234

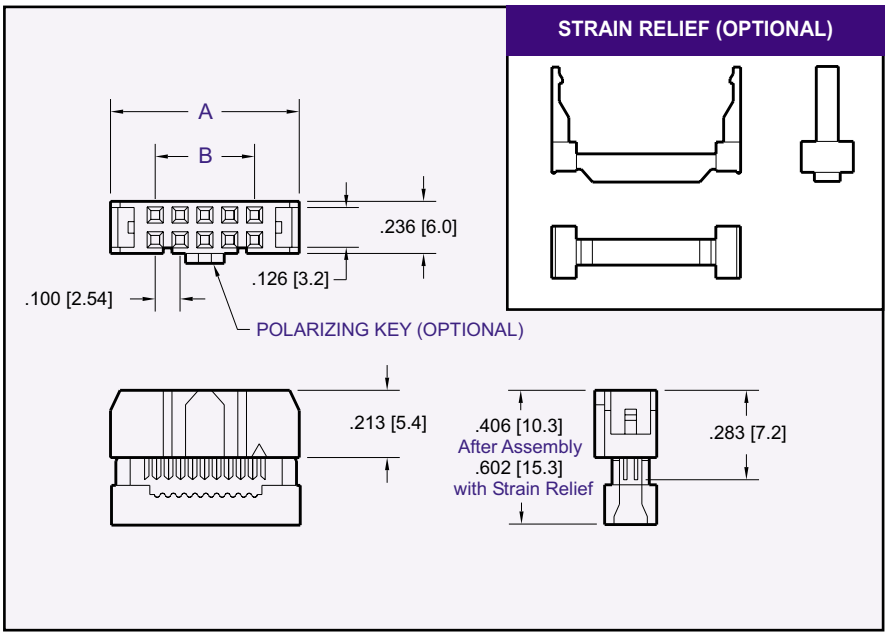

DIMENSIONS ARE IN INCHES & [MM]

CONTACTS	A	B
06	0.479 [12.16]	0.200 [05.08]
08	0.580 [14.74]	0.300 [07.62]
10	0.680 [17.27]	0.400 [10.16]
12	0.781 [19.85]	0.500 [12.70]
14	0.882 [22.40]	0.600 [15.24]
16	0.982 [24.94]	0.700 [17.78]
20	1.181 [30.00]	0.900 [22.86]
24	1.382 [35.10]	1.100 [27.94]
26	1.480 [37.59]	1.200 [30.48]
30	1.680 [42.66]	1.400 [35.56]
34	1.882 [47.80]	1.600 [40.64]
36	1.980 [50.29]	1.700 [43.18]
40	2.180 [55.37]	1.900 [48.26]
44	2.384 [60.56]	2.100 [53.34]
50	2.684 [68.18]	2.400 [60.96]
56	2.982 [75.74]	2.700 [68.58]
60	3.181 [80.80]	2.900 [73.66]
62	3.281 [83.35]	3.000 [76.20]
64	3.382 [85.90]	3.100 [78.74]

SUGGESTED MATING CONNECTOR

93XX-BX-XX-XX (PAGE F-42)
93XX-B3-XX-XX (PAGE F-43)
93XX-B5-XX-XXX (PAGE F-44)
92XX-XXX-XX (PAGE F-51)

PART NUMBERING

92 | XX | S — | X | X | X | — | XX

SERIES CODE
.100 IDC SOCKET

NO. OF CONTACTS
SEE TABLE

INSULATOR COLOR
1 = BLACK
2 = GREY

STRAIN RELIEF
1 = WITH STRAIN RELIEF
2 = WITHOUT STRAIN RELIEF

POLARIZING KEY
1 = WITH POLARIZING KEY
2 = WITHOUT POLARIZING KEY

CONTACT PLATING
.000050" Nickel underplate

	CONTACT	TAIL
01	= Au Flash	100µ"Sn
10	= 15µ"Au	100µ"Sn
20	= 15µ"Au	100µ"Sn
30	= 30µ"Au	100µ"Sn

CONSULT FACTORY FOR CUSTOM CONNECTORS BUILT TO YOUR SPECIFICATION

9200 Series IDC Header
.100” x .100” Contact Spacing

Specifications

Insulator Material: Glass filled polyester, type PBT, 94V-O, UL Recognized.
Contact Material: Copper Alloy
Contact Plating: Gold and/or Tin over .000050” Ni (See contact plating options).
Current Rating: 3 amp at 30°C
Insulation Resistance: 5000 M ohms min.
Dielectric Withstand Voltage: 1000 V AC
Compliant Section Insertion Force (Press-fit Version): 40 lbs max per contact
Compliant Section Withdrawal Force(Press-fit Version): 10 lbs min per contact
Hole Size Requirements:
Drilled Hole Dia.: .0453± .001
Plating: .001 to .003 copper and .0003 min Tin/Lead.
Finished Hole Diameter: .040 ± .003
UL File Numbers: E146967 & E176234

Features

- Two Latch sizes, to accomadate different mating options.
- Available with or without Latches.
- Press-Fit or Solder Termination.
- Selective loading.
- Consult Factory for Press In Tooling

SUGGESTED MATING CONNECTOR

92XXS-XXX-XX (PAGE F-50)

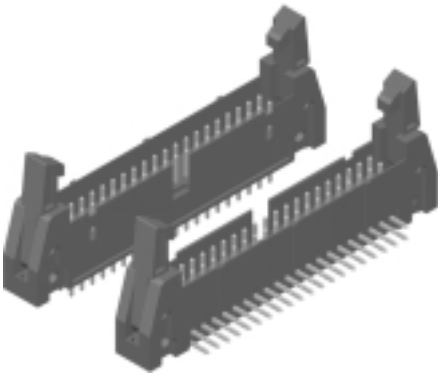

P/N 9200-L

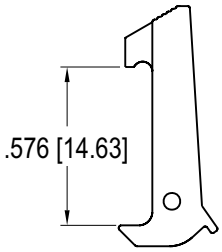

L = Long Latch

CONTACTS	A	B	C	D
10	0.400 [10.16]	0.710 [18.03]	0.860 [21.84]	1.260 [32.00]
12	0.500 [12.70]	0.810 [20.57]	0.960 [24.38]	1.360 [34.54]
14	0.600 [15.24]	0.910 [23.11]	1.060 [26.92]	1.460 [37.08]
16	0.700 [17.78]	1.010 [25.65]	1.160 [29.46]	1.560 [39.62]
20	0.900 [22.86]	1.210 [30.73]	1.360 [34.54]	1.760 [44.70]
24	1.100 [27.94]	1.410 [35.81]	1.560 [39.62]	1.960 [49.78]
26	1.200 [30.48]	1.510 [38.35]	1.660 [42.16]	2.060 [52.32]
30	1.400 [35.56]	1.710 [43.43]	1.860 [47.24]	2.260 [57.40]
34	1.600 [40.64]	1.910 [48.51]	2.060 [52.32]	2.460 [62.48]
40	1.900 [48.26]	2.210 [56.13]	2.381 [60.48]	2.760 [70.10]
50	2.400 [60.96]	2.710 [68.83]	2.860 [72.64]	3.260 [82.80]
60	2.900 [73.66]	3.210 [81.53]	3.360 [85.34]	3.760 [95.50]
64	3.100 [78.74]	3.410 [86.61]	3.560 [90.42]	3.960 [100.6]

DIMENSIONS ARE IN INCHES & [MM]

P/N 9200-S

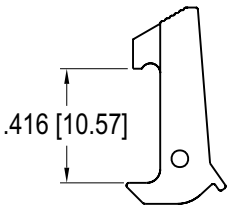

S = Short Latch

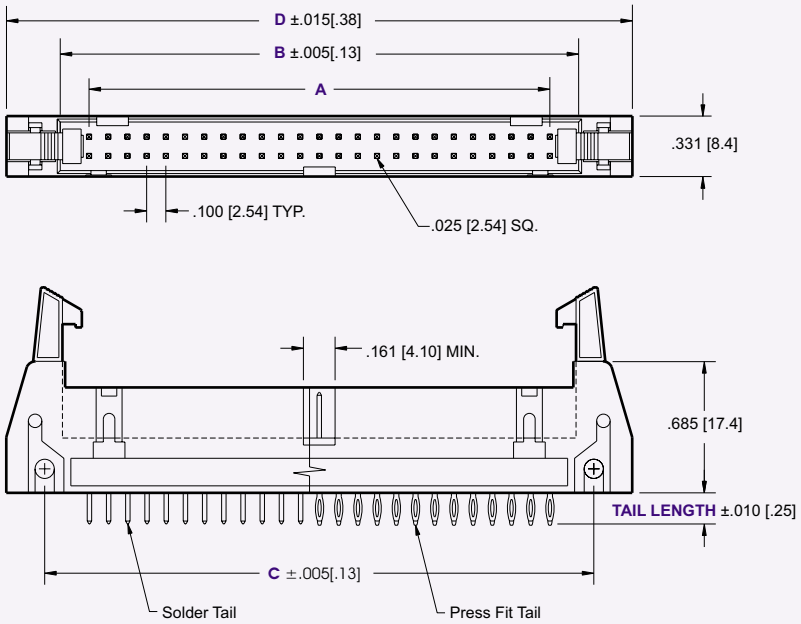

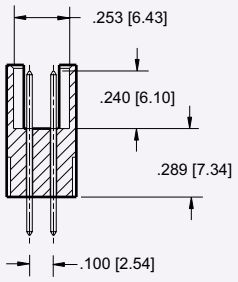

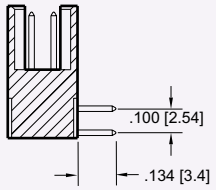

Right Angle Version

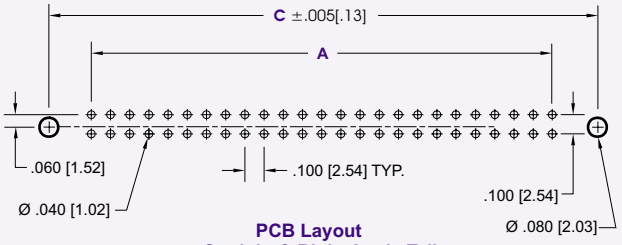

PCB Layout
Straight & Right Angle Tail

PART NUMBERING

92 | XX — X | X | X — XX

SERIES CODE
.100" Center Latch Header

NO. OF CONTACTS
10 - 64

LATCH OPTION
S = Short Latch
L = Long Latch
N = No Latch

CONTACT STYLE
1 = Pin-less
2 = Solder
3 = Press-fit

TAIL LENGTH
1 = Pin-less
2 = .175 [4.45] Press Fit
3 = .120 [3.05] Solder
4 = .175 [4.45] Solder
5 = Right Angle

CONTACT PLATING
.000050" Nickel underplate

	CONTACT	TAIL
03 =	Au Flash	Au Flash
10 =	10µ"Au	100µ"Sn
20 =	15µ"Au	100µ"Sn
30 =	30µ"Au	100µ"Sn

CONSULT FACTORY FOR CUSTOM CONNECTORS BUILT TO YOUR SPECIFICATION

ELECTRONIC CONNECTOR SERVICE INC. 11880 WESTERN AVE. STANTON, CA 90680 TOLL FREE (877) ECS-CONN TEL (714) 895-6351 FAX (714) 894-1858
WWW.ECSCONN.COM

9000 Series Header
.045 Square Strip Headers

Specifications

Insulator Material: Glass filled polyester, Type PBT, 94V-O, UL Recognized.
Contact Material: Copper Alloy
Contact Plating: Gold and Tin over .000050" Ni (See contact plating options.)
Insulation Resistance: 5000 M ohms min.
Dielectric Withstand Voltage: 1500 VAC
Current Rating: 5 AMPS at 30°C
Operating Temperature: -40°C To +105°C
Hole Size Requirements:
Drilled Hole Diameter: .0773±.001
Plating: .001 to .003 copper and .0001 to .0008 solder
Finished Hole Diameter:
.072±.003
UL File Numbers: E146967 & E176234

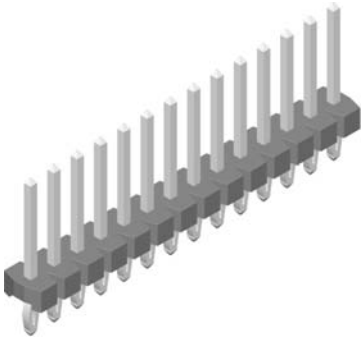

APPLICATION TOOLING FOR PRESS-FIT HEADERS

PART NUMBERING

90 | XX — X X X — T

SERIES CODE

NO. OF CONTACTS
SINGLE ROW = 01 - 20
DUAL ROW = 02 - 40

CONTACT SPACING
1 = .156
2 = .200

NO. OF ROWS
1 = SINGLE ROW
2 = DUAL ROW

CONTACT HEIGHT
1 = .300
2 = .510

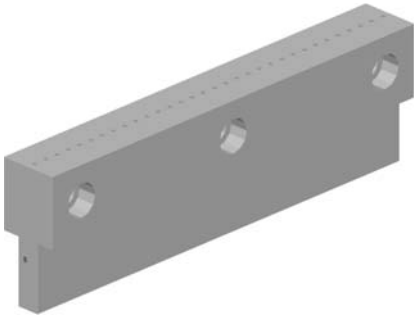

PART NUMBERING

90 | XX — X X — X X — XX

SERIES CODE

NO. OF CONTACTS
SINGLE ROW = 01 - 20
DUAL ROW = 02 - 40

CONTACT SPACING
1 = .156 CENTERS
2 = .200 CENTERS

NO. OF ROWS
1 = SINGLE ROW
2 = DUAL ROW

CONTACT HEIGHT
1 = .300±.015
2 = .510±.015

TERMINATION
1 = PRESS-FIT
2 = SOLDER

CONTACT PLATING
.000050" Nickel underplate

	CONTACT	TAIL
00	= 100μ"Sn	100μ"Sn
01	= Au Flash	100μ"Sn
20	= 15μ"Au	100μ"Sn
30	= 30μ"Au	100μ"Sn

CONSULT FACTORY FOR CONNECTORS BUILT TO YOUR SPECIFICATION

ELECTRONIC CONNECTOR SERVICE INC. 11880 WESTERN AVE. STANTON, CA 90680 TOLL FREE (877) ECS-CONN TEL (714) 895-6351 FAX (714) 894-1858
WWW.ECSCONN.COM

.156 X .200 CENTERS

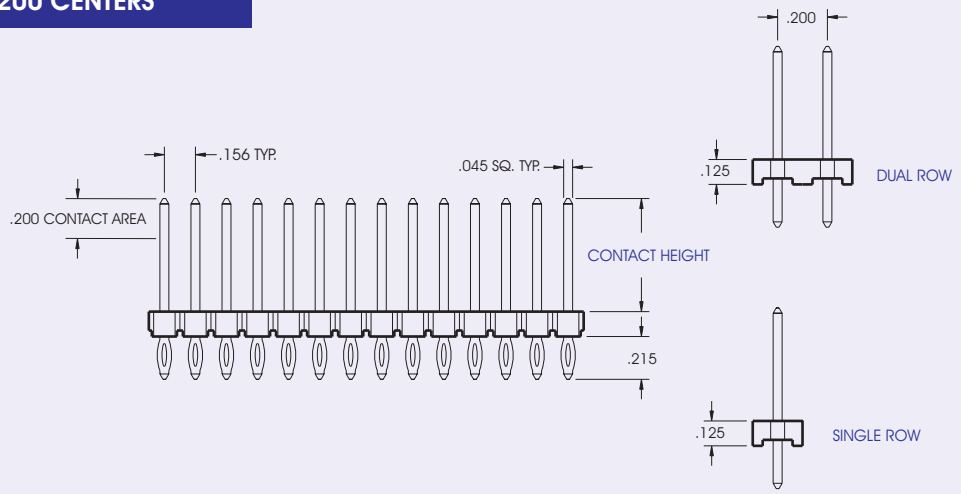

.200 X .200 CENTERS

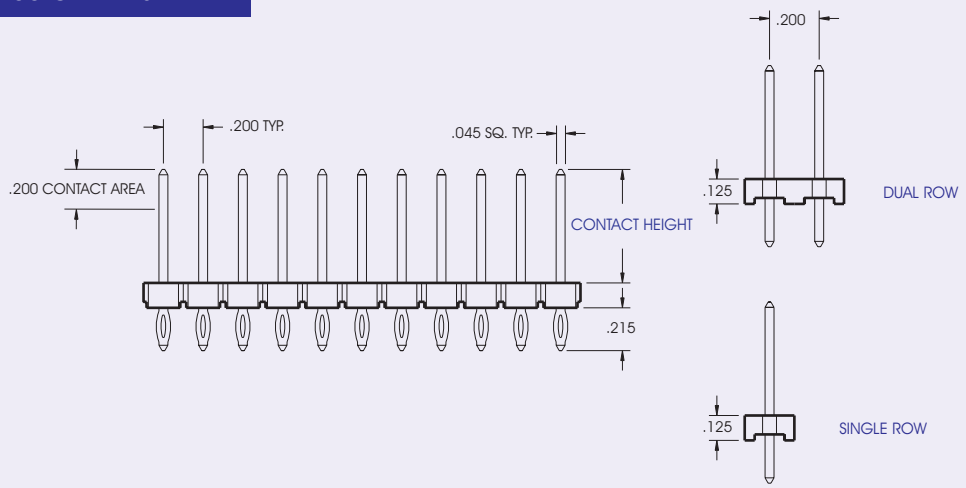

RECOMMENDED PC BOARD LAYOUTS

.156 X .200 CENTERS

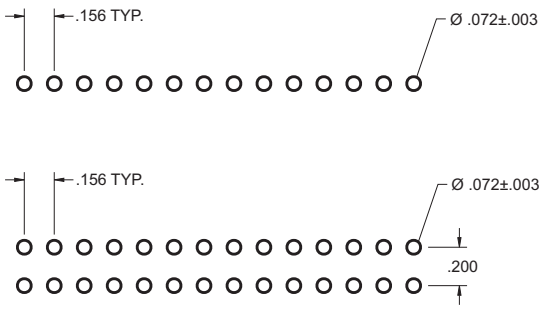

.200 X .200 CENTERS

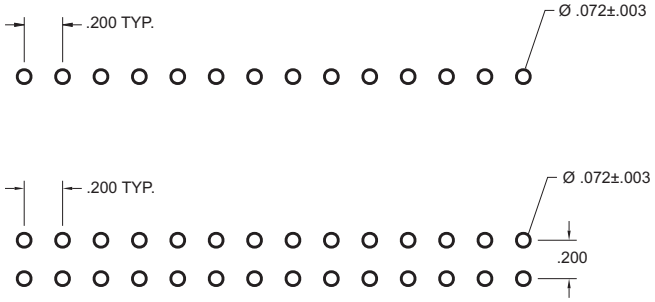

CONSULT FACTORY FOR CONNECTORS BUILT TO YOUR SPECIFICATION

9000 Series
.045 Square Power Terminals

Specifications

Insulator Material: Glass filled polyester, Thermoplastic, 94V-O, UL Recognized.
Contact Material: Copper Alloy
Contact Plating: 100µ" Tin over .000050" Ni.
Insulation Resistance: 1000 M ohms at 500 VDC
Dielectric Withstand Voltage: 1000 VAC/rms 60Hz for 1 min.
Current Rating: 5 AMP
Contact Resistance: 20 m ohms max. at 1 Amp DC
Voltage Rating: 250 VAC/rms 80Hz
UL File Numbers: E146967 & E176234

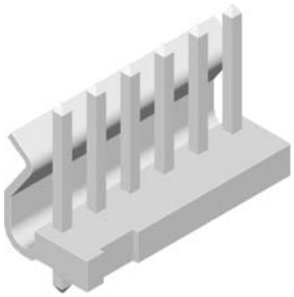

STRAIGHT

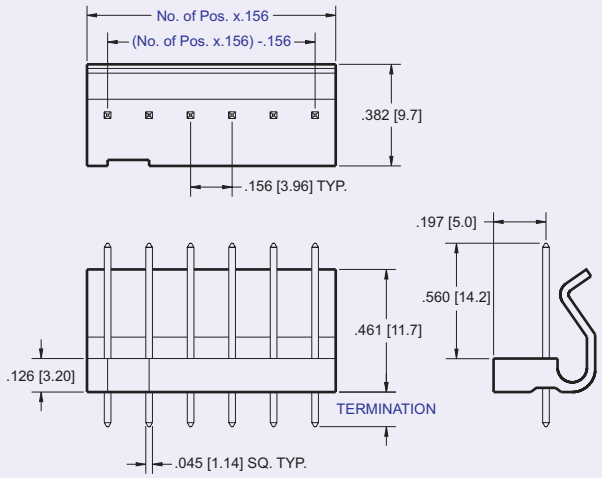

RIGHT ANGLE

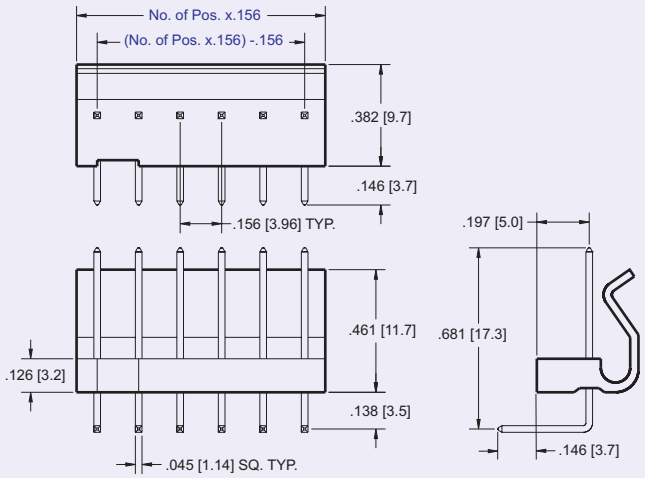

PCB LAYOUT

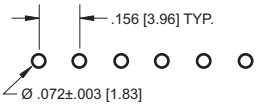

PART NUMBERING

90 | XX — A | X — 00 — XX

SERIES CODE
.045 SQUARE POWER TERMINALS

NO. OF CONTACTS
02 - 20

TERMINATION
1 = STRAIGHT SOLDER(.130 TAIL LENGTH)
2 = R/A SOLDER (.146 TAIL LENGTH)
3 = STRAIGHT PRESS-FIT (.215 TAIL LENGTH)
CONSULT FACTORY FOR APPLICATION TOOLING

CONTACT PLATING
.000050" Nickel underplate

CONTACT	TAIL
00 = 100µ"Sn	100µ"Sn

CONSULT FACTORY FOR OTHER PLATING OPTIONS

CONSULT FACTORY FOR CONNECTORS BUILT TO YOUR SPECIFICATION

ELECTRONIC CONNECTOR SERVICE INC. 11880 WESTERN AVE. STANTON, CA 90680 TOLL FREE (877) ECS-CONN TEL (714) 895-6351 FAX (714) 894-1858
WWW.ECSCONN.COM

9000 Series
.100 [2.54] Friction Lock Header

Specifications

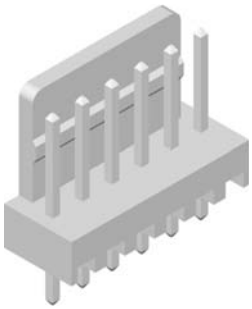

Insulator Material: Glass filled polyester, Thermoplastic, 94V-O, UL Recognized.
Contact Material: Copper Alloy
Contact Plating: 100µ" Tin over .000050" Ni.
Insulation Resistance: 1000 M ohms at 500 V DC
Dielectric Withstand Voltage: 1000 V AC/rms 60Hz for 1 min.
Current Rating: 3 AMP
Contact Resistance: 20 m ohms max. at 1 Amp DC
Voltage Rating: 250 V AC/rms 80Hz
UL File Numbers: E146967 & E176234

STRAIGHT

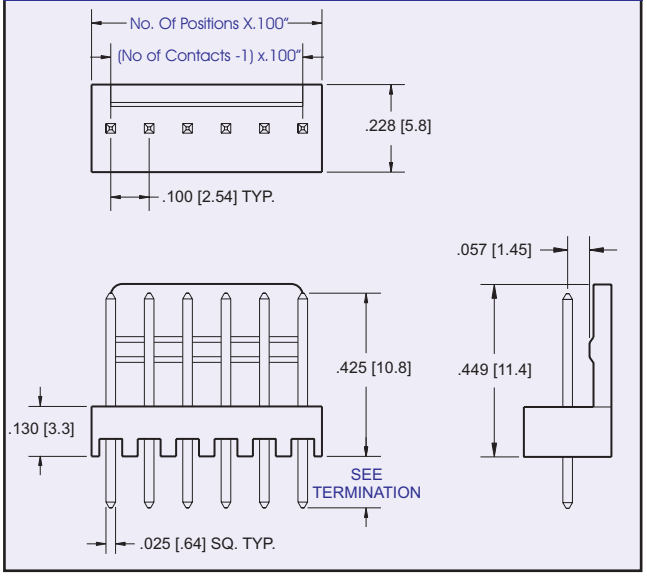

RIGHT ANGLE

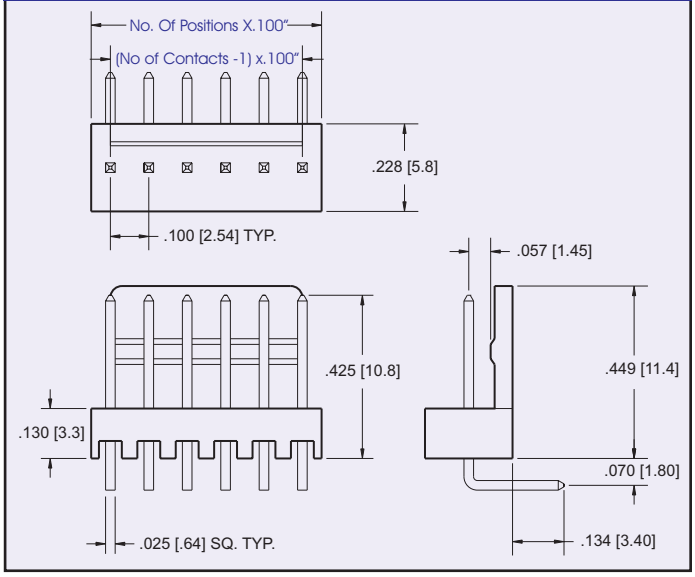

PCB LAYOUT

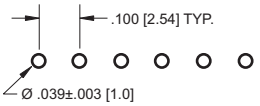

PART NUMBERING

90 | XX — C | X — 00 — XX

SERIES CODE
.100" HEADERS

NO. OF CONTACTS
02 - 20

TERMINATION
1 = .134 [3.40] DIP SOLDER
2 = .134 [3.40] RIGHT ANGLE
3 = .179 [4.55] PRESS-FIT

CONTACT PLATING
.000050" Nickel underplate

	CONTACT	TAIL
00	100µ"Sn	100µ"Sn
03	Au Flash	Au Flash
30	30µ"Au	100µ"Sn

CONSULT FACTORY FOR CONNECTORS BUILT TO YOUR SPECIFICATION

ELECTRONIC CONNECTOR SERVICE INC. 11880 WESTERN AVE. STANTON, CA 90680 TOLL FREE (877) ECS-CONN TEL (714) 895-6351 FAX (714) 894-1858
WWW.ECSCONN.COM

91000 Series Feed Through Pins
.025 SQ.

Specifications

Contact Material: Copper Alloy
Contact Plating: Gold or Tin over .000050" Nickel, (See Contact Plating Options)
Current Rating: 3 amp at 30°C
Dielectric Withstand Voltage: 1800 V AC
Compliant Section Insertion Force: 40 lb max per contact
Compliant Section Withdrawal Force: 10 lbs min per contact
Hole Size Requirements:
Drilled Hole Dia.: .0453±.001
Plating: .001 to .003 copper and .0003 min Tin Lead.
Finished Hole Diameter: .040±.003
Recommended Board Thickness: .093+
UL File Numbers: E146967 & E176234

Features

- Available in selective gold plate
- Packages in reel form or in pre-cut strips to your requirement.

For drawings, technical data or samples, contact E.C.S. at 714/895-6351

Note: Press in tool required. Consult factory for press in tooling.

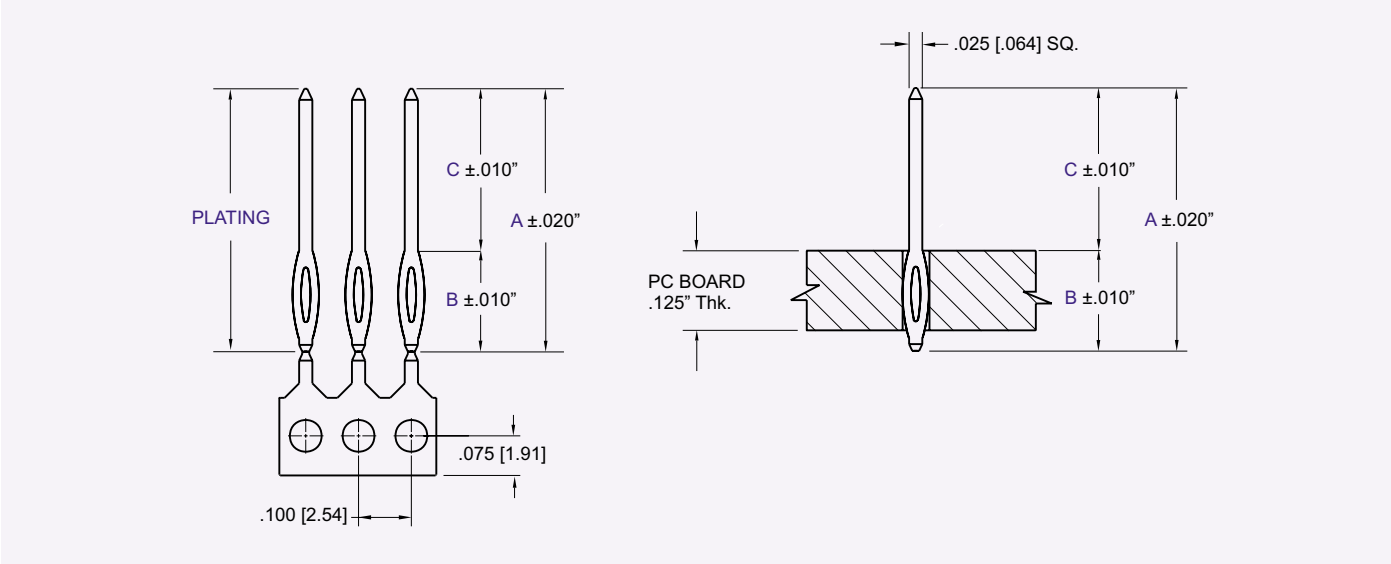

DIMENSIONS ARE IN INCHES & [MM]

PART NUMBERING

91000 — XX — XX

SERIES CODE

PIN LENGTH

PLATING

XX	A	B	C
01	.510 [12.95]	.179 [4.55]	.330 [8.38]
02	.644 [16.36]	.179 [4.55]	.465 [11.81]
03	.863 [21.92]	.179 [4.55]	.684 [17.37]

CONSULT FACTORY FOR OTHER PIN LENGTHS

.000050" Nickel Under plate
00 = 100µ"Sn
10 = 5µ"Au
30 = 30µ"Au

91560 Series Compliant Pin
.045 SQ.

Specifications

Contact Material: Phosphor Bronze Alloy CA510
Contact Plating: All over Tin plate .000100/ .000200" thick over Nickel (See Contact Plating Options).
Current Rating: 5 amps at 30°C
Dielectric Withstand Voltage: 1800 VAC
Insertion Force: 40 pounds max. Per contact.
Withdrawal Force: 10 pounds min. Per contact.
Hole Size Requirements:
Drilled Hole Diameter: .0773 +.001/ -.001.
Plating: .001 to .003 copper and .0001 to .0008 solder.
Finished Hole Diameter: . 072 +.003/-.003.
Recommended Board Thickness: .093+
UL File Numbers: E146967 & E176234

Features

- Available in gold plate
- Available in loose piece, or on .156" carrier strip.

For drawings, technical data or samples, contact E.C.S. at 714/895-6351

Note: Press in tool required. Consult factory for press in tooling.

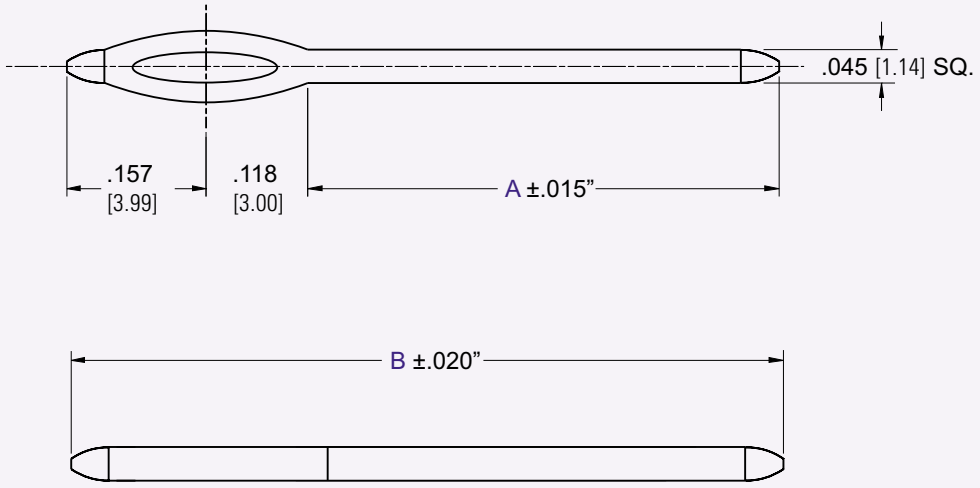

DIMENSIONS ARE IN INCHES & [MM]

PART NUMBERING

91560 — XX — XX

SERIES CODE

PIN LENGTH

	A	B
1=	.635 [16.13]	.910 [23.11]
2=	.425 [10.80]	.700 [17.78]

PLATING

.000050" Nickel Under plate

05 = 100µ"Sn
10 = 5µ"Au
30 = 30µ"Au

91561 Series Signal Pin
.030” X .040”

Specifications

Contact Material: Phosphor Bronze Alloy CA510
Contact Plating: Gold or Tin over .000050” Nickel, and Tin (See Plating Options)
Current Rating: 5 amps at 30°C
Contact Resistance: Compliant section to P.T.H.: 2 m ohms
Dielectric Withstand Voltage: 1800 V AC
Hole Size Requirements: Drilled Hole Dia.: .054”± .001”
Plating: 0.001” to 0.003” copper and .0001” to .0008” solder.
Finished Hole Diameter: .050” to .053”
UL File Numbers: E146967 & E176234

For drawings, technical data or samples, contact E.C.S. at 714/895-6351

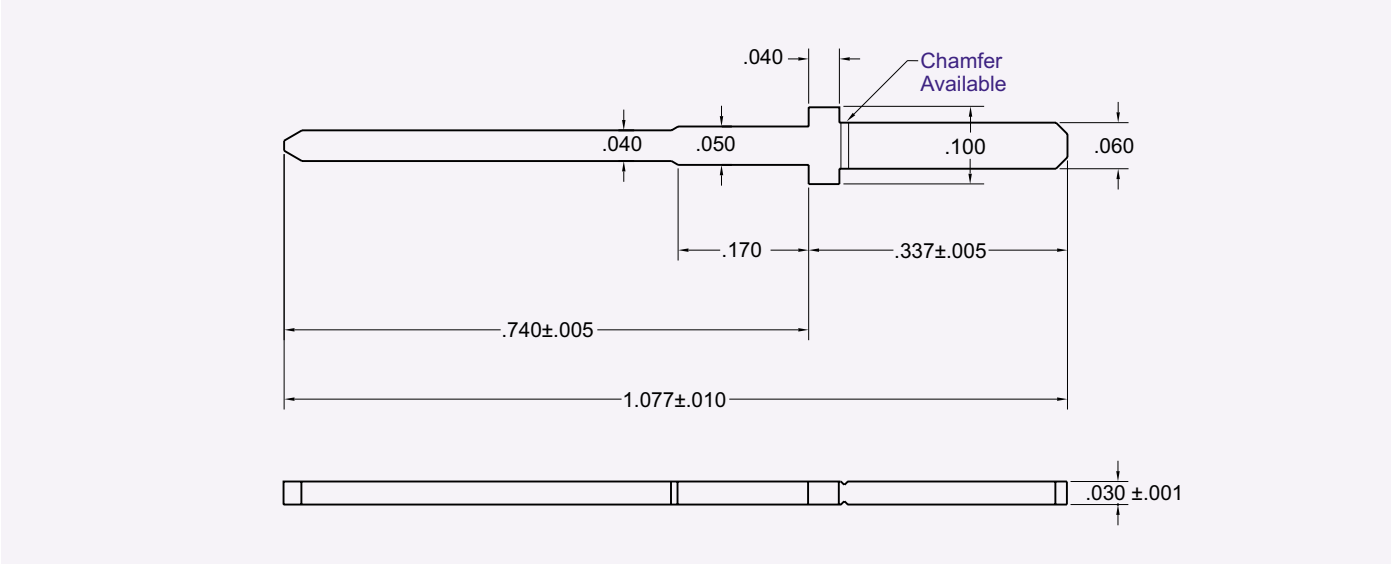

ALL DIMENSIONS ARE IN INCHES

PART NUMBERING

91561 — XX — X — XX

SERIES CODE

BREAK OFF
1 = Chamfer
2 = No Chamfer

PLATING
.000050” Nickel Under plate
05 = 100µ” Sn
10 = 5µ” Au
30 = 30µ” Au